CONTENTS

PVA™ PIAB Vacuum Academy

PIAB'S KNOW-HOW FOR COMPETITIVE ADVANTAGES

Reliable and efficient production is an extremely valuable asset for a company. Handling failures, rejection of products, re-settings and breakdowns cause production losses and costs that can never be regained.

We at PIAB work with vacuum technology, but our objective is to improve our customers' profitability by increasing their production capacity. This makes us a superior supplier. Where other firms talk about airflows, valves and filtration, we focus on matters related to set-up times, cycle times, speed, flexibility, product rejection and maintenance.

Would you like to learn how your vacuum systems can improve efficiency and productivity? Here you will find examples of vacuum courses for industries where our collective knowledge and experience enable you to increase your competence. Don't hesitate to ask us about tailor-made training programs. We do have extensive knowledge that we would like to share with you.

Welcome to the PIAB Vacuum Academy!

The PIAB Vacuum Academy trains your company´s co-workers to make sounder pre-purchasing decisions, find new applications, improve production processes and make your business more profitable.
Training courses are held wherever PIAB is represented. Moreover, they can be held on your company premises and adapted to meet special needs whenever you want.

COURSES OFFERED

1. BASIC VACUUM TECHNOLOGY

Training phases:

- Introduction to vacuum technology
- The role played by vacuum technology in pursuit of improved productivity and profitability
- Minimizing cycle times
- Integration of vacuum
- Various types of vacuum systems
- Dimensioning vacuum systems
- Control systems
- Optimal use of energy

2. OPTIMIZING A VACUUM SYSTEM AND ITS PARAMETERS

Training phases:

- Vacuum pump and vacuum system parameters
- Interactive aids for calculating flows, response times, pressure drops, etc.
- Interactive aids for calculating productivity and cost chganges, energy costs, etc.
- “Integration Into Your Own Product”
- Laboratory work and tests
- “Workshops”
- Application examples

3. VACUUM TECHNOLOGY IN THE PACKAGING INDUSTRY

Training phases:

- The role played by vacuum technology in pursuit of improved productivity and profitability
- Packaging applications using vacuum technology
- Integration of vacuum
- Optimal use of energy
- Evaluation of technical solutions

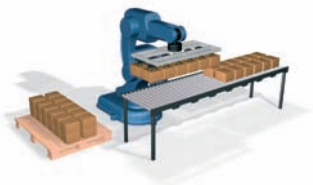

4. VACUUM TECHNOLOGY IN THE AUTOMOTIVE INDUSTRY

Training phases:

- The role played by vacuum technology in pursuit of improved productivity and profitability
- Design and function of vacuum systems for handling metal sheets, glass and plastic parts
- Evaluation of technical solutions

5. VACUUM TECHNOLOGY IN THE GRAPHIC INDUSTRY

Training phases:

- The role played by vacuum technology in achieving improved productivity
- Examples of applications and functions that can be developed and improved by using vacuum technology
- Evaluation of technical solutions

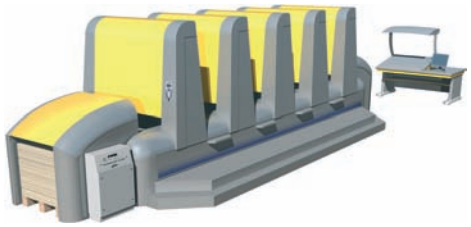

6. VACUUM TECHNOLOGY IN THE POWDER AND BULK INDUSTRY

Training phases:

- Basic knowledge of vacuum conveying of powder and bulk
- Design and function of a bulk handling system using vacuum technology
- Integration of vacuum
- Optimal use of energy
- Evaluation of technical solutions

VACUUM THEORY

WHAT IS VACUUM?

When using the terms ”vacuum”, ”negative pressure”, ”suction”, etc., we mean a pressure that is lower than the atmospheric pressure, which is the pressure of the weight of the air above us. At sea level it is usually 14.7 psi. This means that a column of air with a cross-sectional area of 1 ft^2 presses on the surface of the earth with a force of around 2,100 lbf. By reducing the pressure in a closed space the atmospheric pressure becomes a potential energy source.

A vacuum cleaner does not suction. Air and dust are pressed into the vacuum cleaner by the surrounding higher atmospheric pressure.

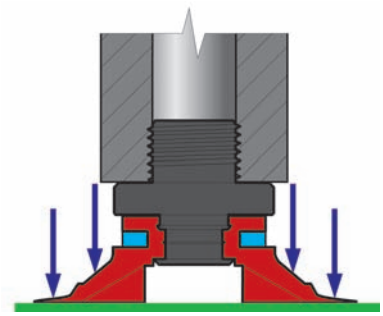

A suction cup adheres to a surface by the surrounding higher pressure.

ALTITUDE ABOVE SEA LEVEL

As the atmospheric pressure is the working force, the force will consequently change with the atmospheric pressure. This means that the present barometric pressure and the altitude above sea level must be taken into consideration. Up to 6,500 ft, the pressure is reduced by around 1% per 330 ft. An application which is designed to hold 100 lb at sea level, can hold only 89 lb at an altitude of 3,280 ft.
The chapter **Tables** shows the effect of the atmospheric pressure on the vacuum level.

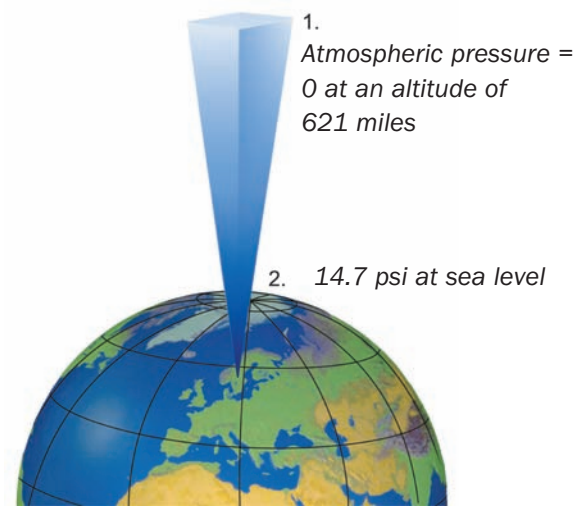

At the summit of Mount Everest (29,030 ft) the atmospheric pressure is approximately 4.85 psi.

A DEFINITION FOR VACUUM IS:

1a. Absence of matter. b. A space empty of matter. c. A space relatively empty of matter. d. A space in which the pressure is significantly lower than atmospheric pressure.

Source: The American Heritage® Dictionary of the English Language: Fourth Edition..

EXPRESSIONS AND UNITS

In everyday speech there are many different expressions and units for pressure below the atmospheric pressure. It is therefore important to relate to the same vocabulary in discussions. The adjoining table shows some common expressions and units used in connection with vacuum. For conversion tables between the different units, see tables No. 1, 2 and 3 in the Tables chapter.

Expressions
Under pressure
Absolute pressure
% vacuum (% of vacuum)
Negative pressure

Units	
-kPa	bar
inHg	mm H_2O
mmHg	torr
hPa	mbar

DIFFERENT TERMS FOR PRESSURE IN RELATION TO "ABSOLUTE VACUUM"

Physically there is only one kind of ”pressure” and that is the one that starts from ”0” or absolute vacuum. All above ”0” is pressure and correctly named absolute pressure. Normal atmospheric pressure (14.7 psi is used as a reference, which is why the terms “positive pressure” or “negative pressure” are used. Earlier the term “% vacuum” was used, where 0% was atmospheric pressure and 100% absolute vacuum.

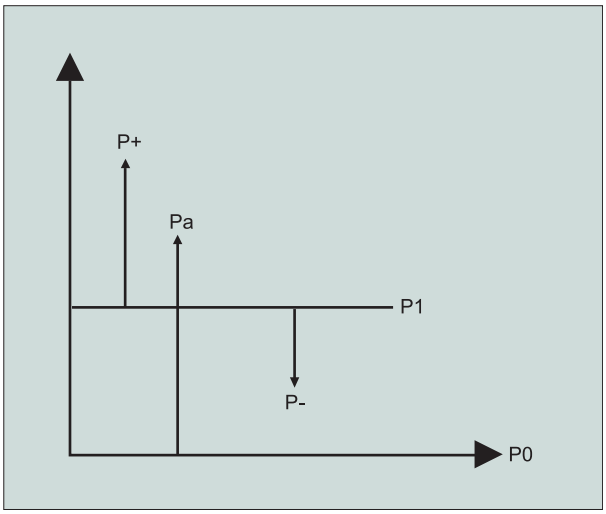

APPLIED VACUUM CAN NORMALLY BE DIVIDED INTO THREE MAIN CATEGORIES

Blowers or low vacuum	0–6 -inHg	For ventilation, cooling, vacuum cleaning, ...
Industrial vacuum	6–29 -inHg	For picking, holding, automation, ...
Process vacuum	29 -inHg –	Deep vacuum for laboratories, manufacturing of microchips, plating, ...

ENERGY NEEDS FOR DIFFERENT VACUUM LEVELS

The energy required to create vacuum increases asymptotically towards infinity with increased vacuum. To obtain optimum energy exchange it is very important to choose the least possible vacuum. To illustrate the energy needs, a cylinder with a piston (piston pump) is suitable.

According to Boyle's Law the pressure (p) in a gas is inversely proportional to its volume (V) at constant temperature:

$P_1 \times V_1 = P_2 \times V_2$

This means that increased volume gives a lower pressure.

By pulling the piston slowly, the distance extended will show the increased energy needs. The temperature is not constant in practice. However, at a slow operation the temperature effect is negligible.

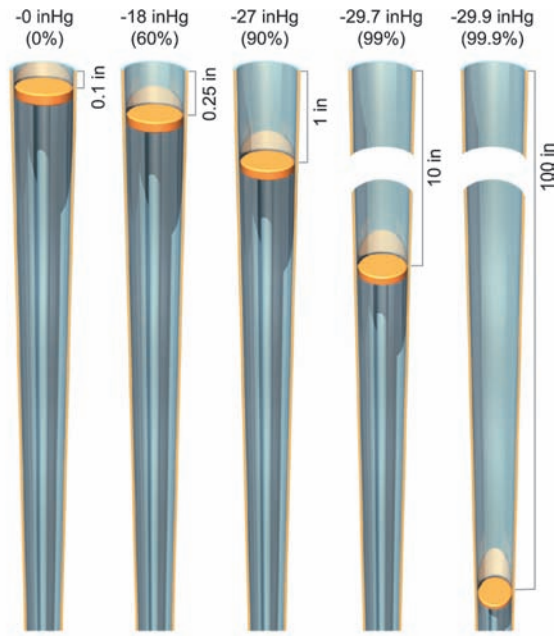

ENERGY REQUIREMENT AT INCREASED VACUUM

The diagram illustrates the energy requirement at increased vacuum. As can be seen, the energy requirement increases drastically above 27 -inHg, which is why a vacuum level below this is always advisable.

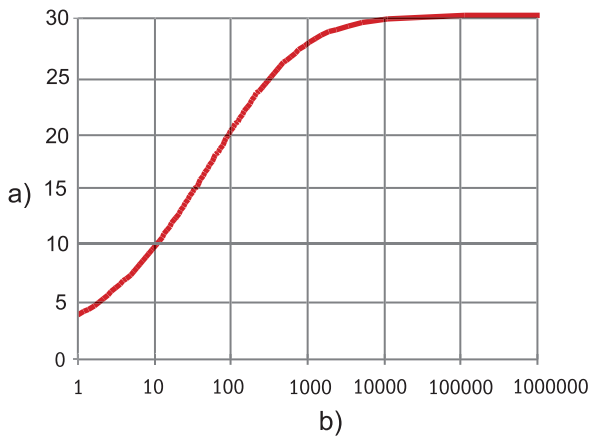

a) Pressure below atmospheric -inHg,
b) Energy factor

VACUUM PUMPS

MECHANICAL PUMPS

The main principle for all mechanical pumps is that they convey, in one way or another, a certain volume of air from the suction side (the vacuum side) to the exhaust side. In that way they create a vacuum.

Mechanical pumps usually have an electric motor as power source, but it can also be an internal combustion engine, a hydraulic or a compressed air-driven pump.

Fans		Advantages	Disadvantages
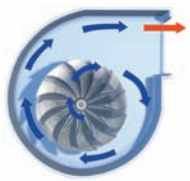	Centrifugal blower	Few moving parts Large suction volumes Strong	Low maximum vacuum Slow start-up and long stop time High noise level
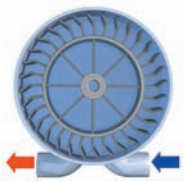	Regenerative blower	Few moving parts Large suction volumes Low energy consumption	Low maximum vacuum Slow start-up and long stop time High noise level

DISPLACEMENT PUMPS

Displacement pumps		Advantages	Disadvantages
	Piston pump	Relatively low price	High heat emission Low maximum vacuum
	Membrane pump	Few moving parts Compact Low price	Small suction volumes
	Vane pump	High vacuum and flow Relatively low noise level	Sensitive to contamination Relatively high price High service requirements High heat emission
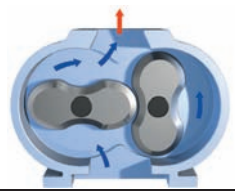	Roots pump	High flow Low service requirements	High price High heat emission High noise level

COMPRESSED AIR-DRIVEN EJECTOR PUMPS

All ejector pumps are driven with pressurized gas, usually compressed air. The compressed air flows into the ejector pump, where it expands in one or more ejector nozzles. When expanding, the stored energy (pressure and heat) is converted into motive energy. The speed of the compressed air jet increases rapidly, while the pressure and the temperature go down, attracting more air and thereby creating a vacuum on the suction side. Some ejector pumps may also be used to blow air.

Compressed air-driven ejector pumps		Advantages	Disadvantages
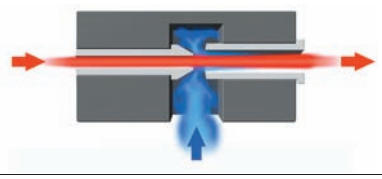	Single-stage ejector	Low price No heat emission Compact	High noise level Gives either high flow or high vacuum Poor efficiency
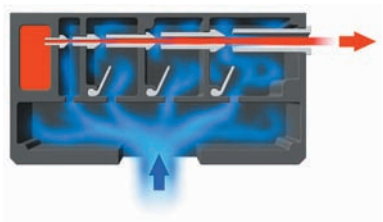	Multi-stage ejector	High efficiency Low energy consumption High reliability Low noise level No heat emission	
	COAX® technology	High efficiency Low energy consumption High reliability Low noise level No heat emission Operates even at low feed pressure Integrated features Modularly built Easy to supplement and upgrade later on Easy to clean	

VACUUM FLOW, HOW IS IT MEASURED?

In order to obtain pressure lower than atmospheric pressure in a container, some of the air mass must be removed by a vacuum pump. For example, half the air mass must be removed to obtain a vacuum level of 15 -inHg. The air evacuated by the pump per unit of time is called the vacuum flow and is a measure of how quickly the pump can perform this function.

Many manufacturers of mechanical vacuum pumps state vacuum flow in terms of the pump's displacement volume. This flow is called "displacement flow" or "volume flow", displacement flow equals the chamber volume times the number of revolutions per unit time. It is often expressed as Actual Cubic feet per Minute (ACFM), Inlet Cubic Feet per Minute (ICFM) or even simply as Cubic Feet per Minute (CFM). In mechanical pumps, this value is constant and can lead the observer to think, incorrectly, that the vacuum flow is constant during the entire evacuation process.

In the evacuation process the air actually becomes thinner and thinner for every stroke of the cylinder until the pump reaches the maximum vacuum level which is that point where the vacuum flow would then be zero. The pump is still pumping the same volume flow but the air mass is so thin that compared to air at normal atmospheric pressure it is as if there was no air.

To account for the change in air mass during the evacuation process PIAB provides flow data in terms of standard cubic feet per minute (SCFM). Also called free air flow, this method normalizes the flow to standard atmospheric conditions. As the vacuum becomes deeper and the air is thinner, a higher actual volume must be displaced to evacuate each standard cubic foot. The table below lists one pump's performance in terms of displacement flow (CFM) and free air flow (SCFM). At zero vacuum, the flows are equal. This is because the actual conditions are in fact standard conditions. But as the vacuum level increases, the values diverge. At 15 -inHg. (50%) vacuum, the displacement flow figure is twice the free air flow figure. At deeper vacuum levels, the difference is even greater.

TABLE OF CONVERSION UNITS FOR SOME WAYS OF STATING VACUUM FLOW

Units		Vacuum level -inHg									
		0	3	6	9	12	15	18	21	24	27
Displacement flow	cfm	2.16	2.16	2.16	2.16	2.16	2.16	2.16	2.16	2.16	2.16
Free air flow	scfm	2.16	1.94	1.73	1.51	1.30	1.08	0.86	0.65	0.43	0.22

VACUUM SYSTEMS

When making a vacuum system/lifting device there are several different methods to increase safety and reliability. To give efficient operation and good economy it is important that the designed system is made for a specific application. In addition to the choice of suction cups with attachments, the type and size of vacuum pumps, accessories, safety level and type of system must also be decided upon.

SEALED SYSTEMS

For sealed systems the capacity of the pump is determined by how fast the system can be evacuated to a certain vacuum level. This capacity is called the evacuation time of the pump and is normally specified in s/cf. This value is multiplied by the volume of the system in order to obtain the evacuation time to the desired vacuum level.

NON-SEALED SYSTEMS

With non-sealed systems (lifting of porous materials) the case is different. To maintain the desired vacuum level the pump must have the capacity to pump away the air leaking in. Leakage can be due to, for example, porous material or that one is forced to lift over holes. By establishing the leaking flow, it is possible, by reading the pump data, to find the right pump for the application in question.
If the leakage occurs via a known aperture, the flow can be established according to the adjoining diagram. The diagram gives values for leakage flow when the leakage area is known. The leakage flow is valid when there is an opening of 1 in^2 (normal atmospheric pressure at sea level). To obtain the total flow, the value is multiplied by the total leakage area. See also table No. 8 in the chapter "**Tables**".
When the leakage occurs through a porous material or in an unknown way, the flow can be established by a test with a vacuum pump. The pump is connected to the system and the obtained vacuum level is read. (It should be at least 6 -inHg.) The flow that is pumped away at this vacuum level can be seen on the page of the particular pump. This flow roughly corresponds to the leaking flow.

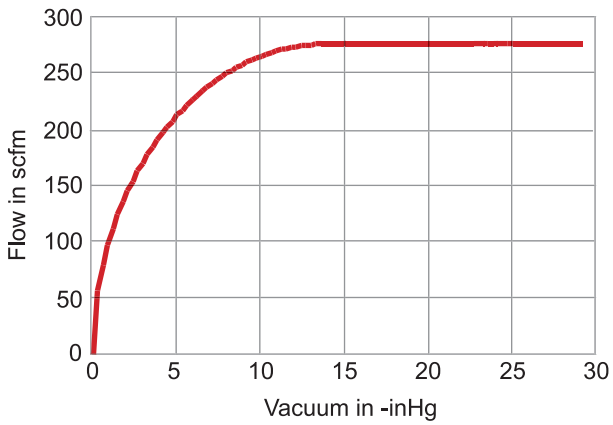

At 13.9 -inHg, the air reaches sonic velocity, and consequently the flow is constant.

ENERGY-SAVING SYSTEMS

Electrically driven, mechanical vacuum pumps normally work during the whole operating cycle and the vacuum requirements are controlled by a valve on the vacuum side. In systems with compressed air-driven vacuum pumps it is often possible to save a lot of energy. As these pumps have a faster reaction time (fast start-up and stop time) the pump can be shut off when the vacuum is no longer needed. The principles of a simple energy-saving system are shown to the right. Many pumps can be delivered with an energy-saving system as standard.

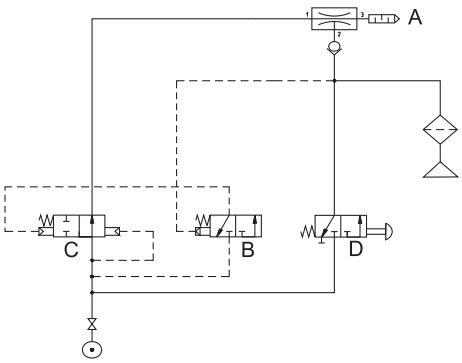

A = Vacuum pump with non-return valve.
B = Vacuum control unit.
C = Feed valve for compressed air.
D = Release valve.

WHY A DECENTRALIZED VACUUM SYSTEM?

The impact of losses in a centralized vacuum system due to tubing, bends, fittings, valves, filters etc., is substantial and has to be compensated by increasing the size of the vacuum pump. A decentralized system with the vacuum pump/cartridge placed right at the suction cup eliminates the risk for losses in the vacuum piping and the need for expensive oversized components. Furthermore, the response time will be reduced substantially without unnecessary volume to be evacuated, and each cup is independent. A pressure loss in one cup will not affect the others.

1. Centralized system.
a) Compressed air, b) Vacuum, c) Vacuum filter

2. Traditional decentralized system.

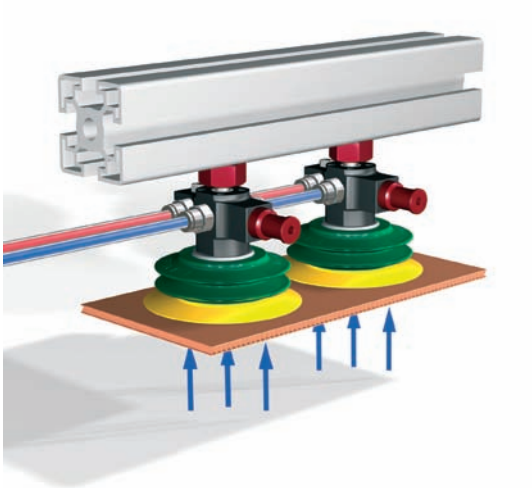

3. The ultimate decentralized system.

SAFETY

Special safety requirements govern manual vacuum lifting devices (SS 765 5801 in Sweden). When designing these devices, allow for at least a double safety margin on the lifting force at the designated vacuum level. The release is blocked during lifts so that the load is not released by mistake. Further safety is obtained by using sound or light signals that give a warning if the vacuum level falls below a certain set value.

VACUUM TANK

As a protection against loss of vacuum, for example, if a compressed air hose would break, a non-return valve is normally fitted near the pump. A vacuum tank between the vacuum pump and the suction cup gives an extra safety margin if an unexpected leakage or loss of vacuum should occur.

DUAL CIRCUIT SYSTEM

Lifting devices with several suction cups are often built as two independent vacuum systems with separate vacuum pumps, each of them capable of holding the load with sufficient safety factor.

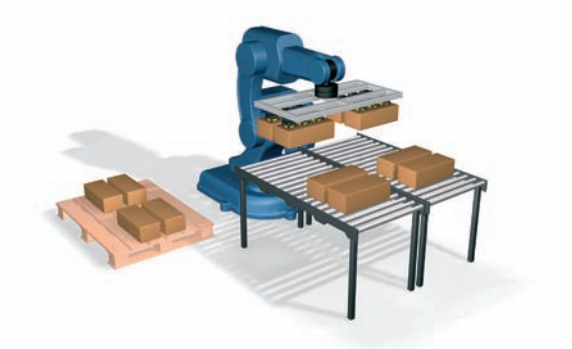

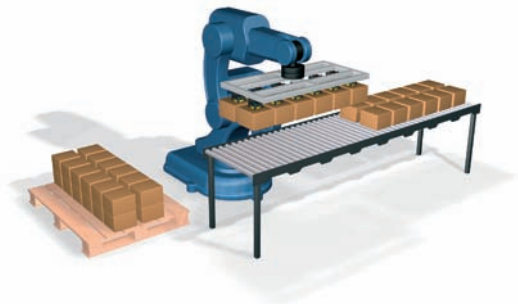

CONCLUSION

Deep vacuum requires a lot of energy. Furthermore, preferably the vacuum pump should be located as close as possible to the suction point in order to minimize the volume that needs to be evacuated. A vacuum tank should be used in applications when a ”rapid”, high-flow vacuum is needed.

SUCTION CUPS

HOW DOES A SUCTION CUP WORK?

A suction cup adheres to a surface as the surrounding pressure (atmospheric pressure) is higher than the pressure between the suction cup and the surface.

To create the low pressure in the suction cup it is connected to a vacuum pump. The lower the pressure (higher vacuum), the greater the force on the suction cup.

$$\Delta p = P_{AT} - P_1$$

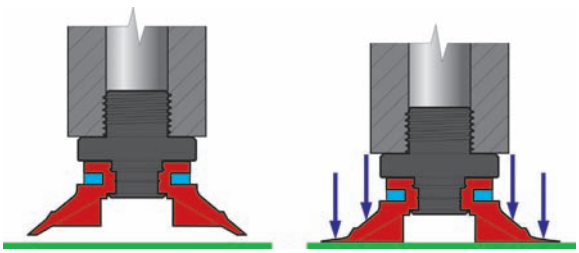

ADVANTAGES AND LIMITATIONS OF THE SUCTION CUP

Material handling with suction cups is a simple, inexpensive and reliable technique. It is therefore a solution worth considering before going over to more complicated methods. Suction cups can lift, move and hold objects that weigh just a few ounces up to several hundred pounds.

Advantages	Limitations
Easy installation Low service requirements Low price Does not damage the material handled Quick attachment and detachment	Limited force (atmospheric pressure) Positioning accuracy

SIZING SUCTION CUPS

Suction cups have quite different capacities depending on the design. Please see the values in the tables for each respective suction cup.

ENERGY REQUIREMENTS AT DIFFERENT VACUUM LEVELS

A deep vacuum means that the suction cup has to work harder and thus wears out quicker; also the energy requirements increase at higher vacuum levels. If the vacuum level increases from 18 to 27 -inHg, the lifting force increases by 1.5 times but with ten times the energy requirement. It is better to maintain a lower vacuum level and instead increase the suction cup area. In many applications, a good target for the vacuum level could be 18 -inHg; at this level you get a high lifting force with relatively low energy requirements.

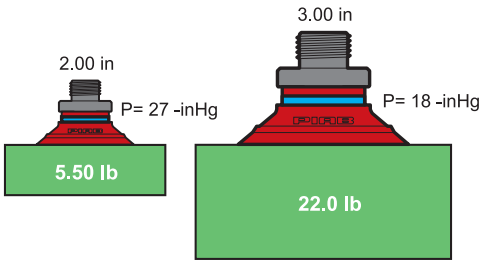

CONSIDER THE HEIGHT ABOVE SEA LEVEL

Atmospheric pressure decreases with increased height. This means that the available force decreases at the same rate. An application designed for lifting 100 lb at sea level, can only manage to hold 89 lb at 3,330 feet. A vacuum gauge is normally calibrated with atmospheric pressure as a reference. This means that the gauge shows available vacuum levels at different heights.

LIFTING FORCE IN DIFFERENT DIRECTIONS

A suction cup can be used irrespective of whether the force is perpendicular or parallel to the surface. If the force is parallel, it is transferred through friction between the suction cup and the surface. A suction cup with cleats is most suitable in this case because it is rigid and provides high friction.

COMPRESSED AIR - CONTAMINANTS AND PURITY CLASSES

CONTAMINANTS AND PURITY CLASSES FOR PRODUCTS FROM PIAB

Generally, products from PIAB uses compressed air as a source of energy, distributed from either a decentralized or centralized compressor.

In order to provide our customers with long term functionality, performance and productivity the compressed inlet air must fulfill general recommendations in accordance with ISO 8573-1 [Compressed air: Contaminants and purity classes]. If not separately stated in the manual or data sheet of the product, the following recommendations must be applied:

General works air	
Vacuum pumps from PIAB	(ISO 8573-1 5 4 3)
Control and instrument air	
Valves, switches, vacuum mgmt, ES	(ISO 8573-1 4 4 3)

NB! In combined products where an instrument uses the air from the pump, the inlet air must fulfil the recommendation for control and instrument air.

DEGREE OF FILTRATION IN ACCORDANCE WITH ISO 8573-1 A B C

ISO 8573-1	A. Solid particles Max number of particles per m³ with size d (µm)						B. Humidity Pressure dew point	C. Overall oil content
Class	d≤0.1	0.1<d≤0.5	0.5<d≤1.0	1.0<d≤5.0	µm	mg/m³	(X=liquid water in g/m³)	mg/m³
0	As specified by user							
1	—	100	1	0	—	—	≤ -70	≤ 0.01
2	—	100000	1000	10	—	—	≤ -40	≤ 0.1
3	—	—	10000	500	—	—	≤ -20	≤ 1.0
4	—	—	—	1000	—	—	≤ 3	≤ .0
5	—	—	—	20000	—	—	≤ 7	—
6			—	—	≤ 5	≤ 5	≤ 10	—
7			—	—	≤ 40	≤ 10	x ≤ 0.5	—

THREAD SYSTEMS

ISO THREAD:

- Cylindrical metric thread: designated with the letter M. Example M5.
- Cylindrical Inch thread (also called Unified thread): designated with the letter UNF. Example 10-32UNF.

DRY SEAL THREAD (AMERICAN SYSTEM OF PIPE THREADS):

The dry seal system consists of cylindrical and conical pipe-threads. The threads have a 60° profile angle and are sealed without packing or seal rings (please note that when these are used in other combination of thread systems, that "sealing" is not applicable). The dimensions are given in inches and PIAB´s catalog uses the letters NPT and NPSF:

- Conical thread is designated NPT. Example: 1/8"NPT.
- Cylindrical thread is noted as the letters NPSF: Example: 1/8"NPSF.

BSP THREAD (BRITISH SYSTEM OF PIPE THREADS):

- The threads have a 55° profile angle and are dimensioned in inches.
- Cylindrical thread is designated with the letter G. Example: G1/8".

COMPATIBILITY OF DIFFERENT THREAD SYSTEMS

Please note that some thread size in different thread systems not always fit. See below table.

	M5 male	M5 female	G1/8" male	G1/8" female	G1/4" male	G1/4" female	G3/8" male	G3/8" female	G1/2" male	G1/2" female	G3/4" male	G3/4" female	G1" male	G1" female	G2" male
10-32UNF female or male	+	+++													
1/8"NPSF female			+++												
1/8"NPT female or male			–	+											
1/4"NPSF female					+										
1/4"NPT female or male					–	–									
3/8"NPSF female							–								
3/8"NPT female or male							–	–							
1/2"NPSF female									+						
1/2"NPT female or male									–	+++					
3/4'NPSF female											+				
3/4"NPT female or male											–	+++			
1"NPT female or male													–	–	
2"NPT female or male															–

+++ Fits, + Fits with short thread, – Does not fit

TABLES

In everyday speech, many different expressions and units are used for both pressure and flow. It is important to agree on what is meant by them.

PRESSURE

P=F/A (Force/Area).
SI unit (Système International d'Unités): Pascal (Pa). 1 Pa = 1 N/m^2.
Common multiple units: MPa and kPa.

Pa (N/m^2)	bar	atm (kp/cm^2)	torr	psi (lb/in^2)
1	0.00001	10.1972x10^{-6}	7.50062x10^{-3}	0.145038x10^{-3}
100 000	1	1.01972	750.062	14.5038
98 066.5	0.980665	1	735.559	14.2233
133.322	1.33322x10^{-3}	1.35951x10^{-3}	1	19.3368x10^{-3}
6 894.76	68.9476x10^{-3}	0.145038x10^{-3}	51.7149	1

Table No. 1
1 torr = 1 mm HG at 0°C, 1 mm column of water = 9.81 Pa

PRESSURE ABOVE ATMOSPHERIC

kPa	bar	psi	atm (kp/cm^2)
1,013	10.13	146.9	10.3
1,000	10	145	10.2
900	9	130.5	9.2
800	8	116	8.2
700	7	101.5	7.1
600	6	87	6.1
500	5	72.5	5.1
400	4	58	4.1
300	3	43.5	3.1
200	2	29	2
100	1	14.5	1
0	0	0	0

Table No. 2

PRESSURE BELOW ATMOSPHERIC

	kPa	mbar	torr	-kPa	-mmHg	-inHg	% vacuum
Sea level	101.3	1,013	760	0	0	0	0
	90	900	675	10	75	3	10
	80	800	600	20	150	6	20
	70	700	525	30	225	9	30
	60	600	450	40	300	12	40
	50	500	375	50	375	15	50
	40	400	300	60	450	18	60
	30	300	225	70	525	21	70
	20	200	150	80	600	24	80
	10	100	75	90	675	27	90
Absolute vacuum	0	0	0	101.3	760	30	100

Table No. 3

CHANGE IN ATMOSPHERIC PRESSURE IN RELATION TO ALTITUDE (HEIGHT ABOVE SEA LEVEL)

A vacuum gauge is normally calibrated with normal atmospheric pressure at sea level as a reference, 14.7 psi, and is influenced by the surrounding atmospheric pressure in accordance with the table below.

The vacuum gauge shows the differential pressure between atmospheric pressure and absolute pressure. This means that the gauge shows what vacuum level is available at different heights.

ATMOSPHERIC PRESSURE

Barometric pressure			The reading on the vacuum gauge at 14.7 psi				
mmHg	psi	Equivalent ft above sea level	18 -inHg	22.5 -inHg	25.5 -inHg	27-inHg	29.7 -inHg
593	11.4	6,562	11.7	16.2	19.2	20.7	23.4
671	12.9	3,281	14.8	19.4	22.4	23.9	26.6
690	13.3	2,553	15.6	20.1	23.1	24.6	27.3
700	13.5	2,149	16.0	20.5	23.5	25.0	27.7
710	13.7	1,788	16.4	20.9	23.9	25.4	28.1
720	13.9	1,532	16.8	21.3	24.3	25.8	28.5
730	14.1	902	17.2	21.7	24.7	26.2	28.9
740	14.3	656	17.6	22.1	25.1	26.6	29.3
750	14.5	364	17.9	22.4	25.4	26.9	29.6
760	14.7	0	18.0	22.5	25.5	27.0	29.7

Table No. 4
**) at normal barometric pressure.*

FLOWS

Flows, volume per unit of time. Quantity designations: Q, q, = V/t (volume/time).
SI Unit: cubic metres per second (m^3/s).
Common multiple units: scfm, l/min, l/s, m^3/h.

m^3/s	m^3/h	l/min	l/s	ft^3/min (scfm) *
1	3,600	60,000	1,000	2,118.9
0.28×10^{-3}	1	16.6667	0.2778	0.5885
16.67×10^{-6}	0.06	1	0.0167	0.035
1×10^{-3}	3.6	60	1	2.1189
0.472×10^{-3}	1.6992	28.32	0.4720	1

Table No. 5
**) 1 ft » 0.305 m*

LEAKAGE FLOWS

The table below shows the leakage flow at different vacuum levels through an opening of 1 in^2.

Vacuum level -inHg	Leakage flow cf/s and in^2
3.0	167
6.0	222
9.0	253
12.0	268 *

Table No. 6
** From about 13.0 to 29.5 -inHg the flow is constant.*

PRESSURE DROP IN COMPRESSED AIR HOSES

When installing compressed air hoses it is important that the dimension (diameter) and length do not lead to excessive pressure drops. PIAB vacuum pumps are supplied with recommended hose dimensions that will not cause excessive pressure drops at lengths below 6.5 ft.

In cases when the pressure drop has to be calculated, the formula below can be used.

Δ P = Pressure drop in psi
qv = Flow in scfm
d = Inner diameter in in.
L = Length of compressed air hoses in ft
P1 = The absolute starting pressure in psi

$$\Delta P = \frac{6.82 \times 10^{-4} \times qv^{1.85} \times L}{d^5 \times P1}$$

$$d = \left(\frac{6.82 \times 10^{-4} \times qv^{1.85} \times L}{\Delta P \times P1}\right)^{0.2}$$

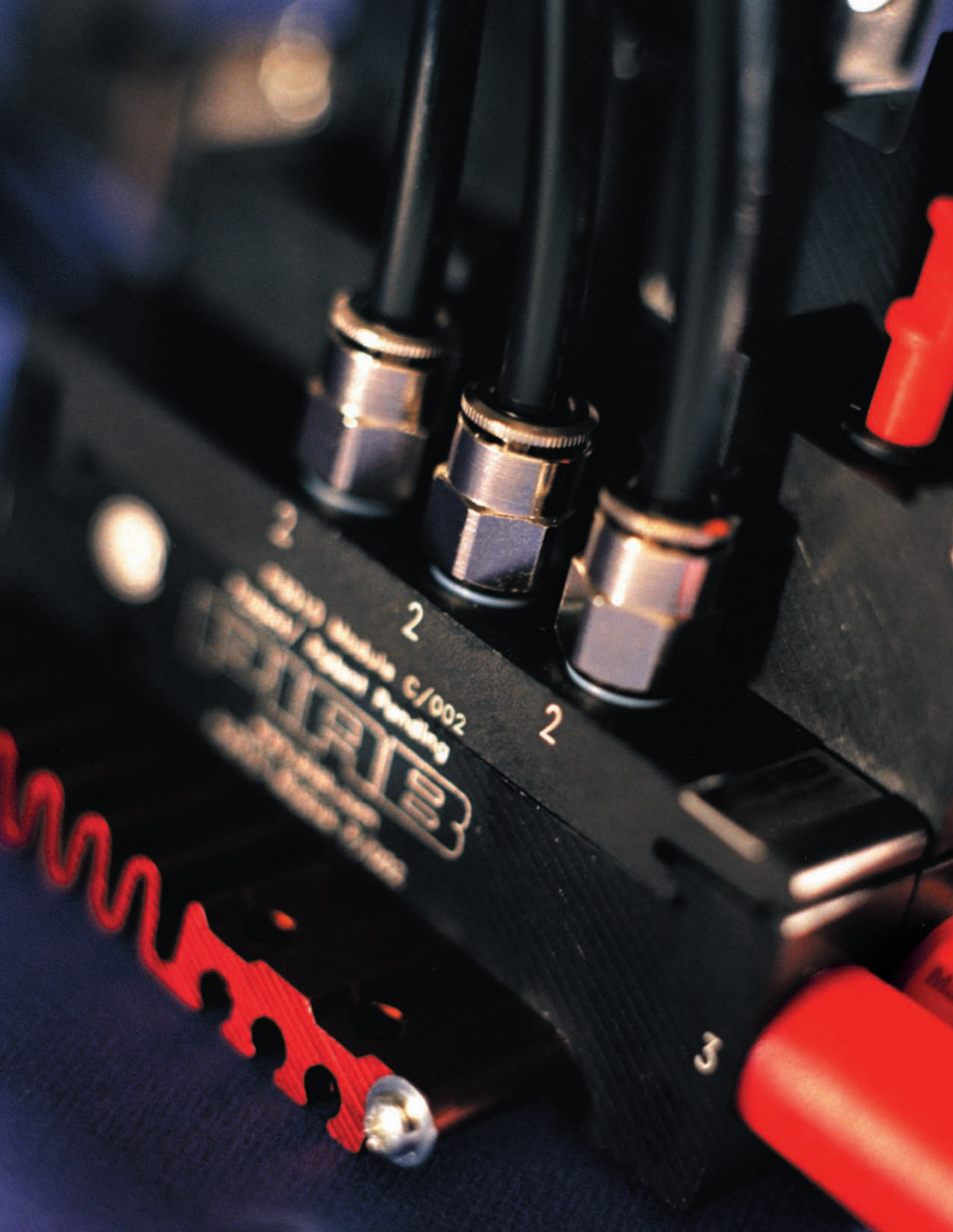
2
2
2
3
c/002

Vacuum pumps

For over 50 years, PIAB has been developing a range of vacuum solutions that cover the widely varying needs of the market. We constantly strive to improve our products and adapt them to market needs by incorporating the latest technology. Therefore, our customers can rely on PIAB to provide the best possible solution. Regardless of whether an application is in the consumer goods, pharmaceutical, automotive, graphic, electronic, chemical to name a few industries, the best way to solve a vacuum-related pain is to use PIAB components.

FUNCTIONAL DESCRIPTIONS

MULTI-STAGE EJECTOR

PIAB vacuum pumps are of the multi-stage ejector type – **a technology patented by PIAB in 1973.**
These vacuum pumps were developed to provide extra vacuum flow in combination with deep maximum vacuum levels while keeping energy consumption at a minimum.
PIAB pumps have no moving parts that vibrate or wear out – important features that contribute heavily to outstanding operational reliability and a pleasant, noise-free working environment.

PRINCIPLE OF PIAB VACUUM PUMPS

PIAB vacuum pumps are compressed air-driven vacuum pumps. The unique construction makes maximum use of the compressed air and therefore consumes less energy. Large vacuum flows and high levels of vacuum are characteristic of PIAB's vacuum pumps.
When compressed air (1) passes through the nozzles (2), air is pulled through with the stream of compressed air. "Suction" is thus created at the opening of each stage (3), resulting in low pressure, vacuum (4).

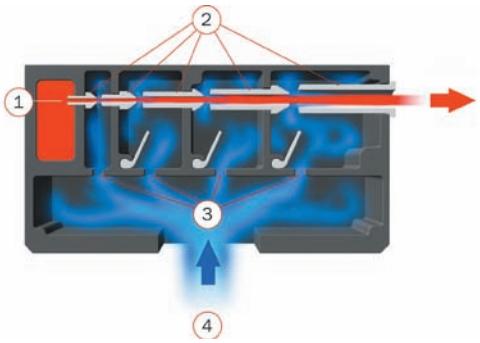

ADVANTAGES OF PIAB VACUUM PUMPS

- Reliability
- Low energy consumption
- Fast response
- High efficiency
- Require a minimum of service
- Small size and low weight
- Easy to install
- Low noise level
- No heat emission
- No vibrations

5-YEAR WARRANTY

COAX® TECHNOLOGY

PIAB's patent technology platform is an offshoot of the multistage technology.
COAX® ensures excellent performance at both low and high feed pressures – ideal for situations where compressed air lines deliver air at low or fluctuating pressures.
Pumps based on the COAX® technology **can operate within the range of 25 to 87 psi.**

Compressed-air zone

Vacuum zone

Just drill a hole in your machine, insert our vacuum cartridge, and you will have your own integrated vacuum solution.

PRINCIPLE OF THE COAX® TECHNOLOGY

Our latest technology is derived from the multi-stage ejector principle. Note that both a filter and check valves are integrated into the ejector section.
When compressed air (1) passes through the nozzles (2), air is pulled through with the stream of compressed air. "Suction" is thus created at the opening of each stage (3). Other PIAB designs incorporating COAX® technology include the Vacuum Gripper System, P2010, P3010, P6010, PMAT, Vacustat and the Adjustable Vacuum Palletizer
.

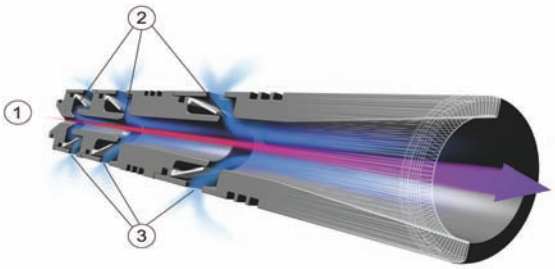

ADVANTAGES OF PIAB VACUUM PUMPS BASED ON COAX® TECHNOLOGY

- Low energy consumption
- Highly efficient
- High operational reliability
- Minimal maintenance
- Simple to install
- Low weight
- Flexible module-based design
- Easy to clean
- Outstanding performance at low and fluctuating feed pressures
- Generate no heat
- Low noise level

In order to support you with the best tools to design your own optimized, decentralized vacuum system and choose the right cartridge for your application, please visit our website www.coaxtechnology.com.

SELECTION GUIDE

WHICH PUMP SHOULD I SELECT?

PIAB vacuum pumps are divided into series having different characteristics: Bi, Pi, Si, L, M, X and H. When you know what these letters mean and the applications for which they were developed, it will be easier to select the right pump.

BI

The Bi Cartridge has been developed to operate at a relatively high vacuum level at very low feed pressure (26 psi). The Bi Cartridge is recommended when you want to ensure high safety of operation in pick-and-place applications, for example, in the electronic industry, where many vacuum units are distributed and where there is a risk of pressure drops. The Bi Cartridge can handle vacuum levels down to 24.9 -inHg.

P2010 Bi	
Recommended operating range	0–21 -inHg
Maximum vacuum level	24.9 -inHg
Feed pressure	16-32 psi

PI

Pi cartridges have been developed to achieve a high vacuum level at low feed pressures. They are ideal when pressures in compressed air lines fluctuate. Pi cartridges are recommended in situations such as handling sheet metal or glass or other non-porous products, where you need good vacuum flow and a high-level vacuum. Pi can deliver high vacuum levels down to 27 -inHg.

P3010 Pi	
Recommended operating range	0–27 -inHg
Maximum vacuum level	27 -inHg
Feed pressure	25-87 psi

P6010 Pi	
Recommended operating range	0–27 -inHg
Maximum vacuum level	27 -inHg
Feed pressure	32-58 psi

SI

Si cartridges are designed to provide extra vacuum flow. They are highly recommended for handling porous materials such as corrugated board and for high-volume evacuation in, for example, a fast-cycling system where it is necessary to compensate for leakage in order to maintain the vacuum level. Si cartridges can deliver moderate vacuum levels down to 22.2 -inHg.

P6010 Si	
Recommended operating range	0–21 -inHg
Maximum vacuum level	22.2 -inHg
Feed pressure	58-87 psi

L

PIAB L-pumps are designed and built to provide extra vacuum flow. They are highly recommended for handling porous materials such as cardboard and for high-volume evacuation in, for example, mixers or fast-cycling systems where it is necessary to compensate for leakage in order to maintain the vacuum

MINI L	
Recommended operating range	6-21-inHg
Maximum vacuum level	22.3 -inHg
Feed pressure	87 psi

CLASSIC L	
Recommended operating range	6-21 -inHg
Maximum vacuum level	22.3 -inHg
Feed pressure	87 psi

M

PIAB M-pumps have been developed to perform well even at low feed pressures. They are thus ideal when pressures in compressed air lines are low or fluctuating. M-pumps are recommended in situations where you need good flow and a high-level vacuum. This is the most frequently used type of pump. They are used in most industrial vacuum pump applications.

MINI M	
Recommended operating range	0–24 -inHg
Maximum vacuum level	24.1 -inHg
Feed pressure	55-87 psi

CLASSIC M	
Recommended operating range	0–27 -inHg
Maximum vacuum level	27.1 -inHg
Feed pressure	50-87 psi

X

PIAB X-pumps have been developed to provide excellent flow and deep vacuum. They are recommended in applications where a deep vacuum is required in, for example, high-speed feeders in packaging machines and different types of processes. Moreover, X-pumps can be driven by low feed pressures, a distinct advantage when pressures in compressed air lines are low or fluctuating.

MINI X	
Recommended operating range	21-27.9 -inHg
Maximum vacuum level	27.9 -inHg
Feed pressure	58-87 psi

H

PIAB H-pumps provide very high vacuum, and they are recommended in applications with little or no leakage, such as in laboratory applications and in other processes requiring high vacuum levels.

CLASSIC H	
Recommended operating range	29.5-29.85 -inHg
Maximum vacuum level	29.85 -inHg
Feed pressure	87 psi

RECOMMENDED OPERATING RANGE

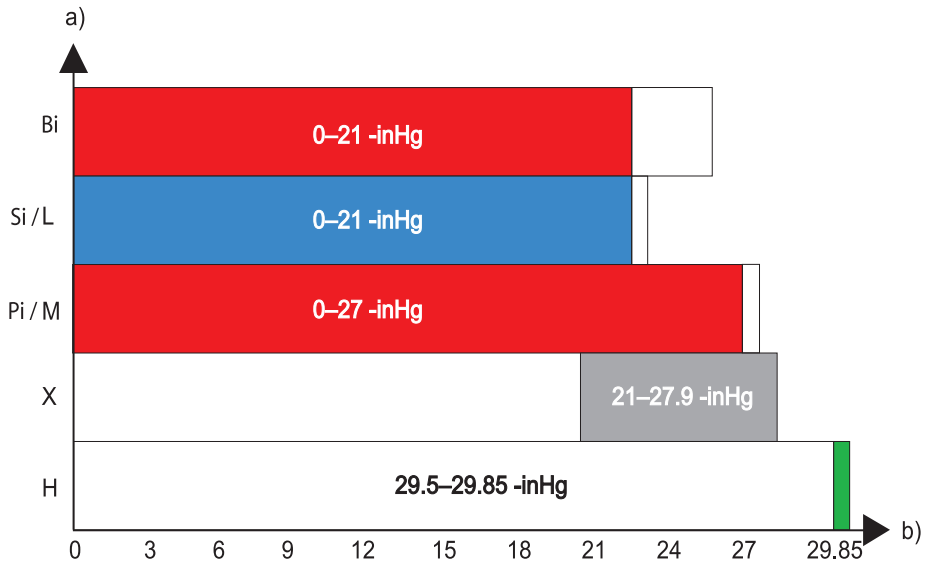

a) Pump type,
b) Vacuum level -inHg

VACUUM FLOW AT RECOMMENDED FEED PRESSURE

Pump series	Model/ Design	Max vacuum	Feed pressure	Vacuum flow (scfm) at different vacuum levels (-inHg)									
		-inHg	psi	0	3	6	9	12	15	18	21	24	27
Si	COAX Si02-2	22.2	87	0.59	0.44	0.25	0.17	0.15	0.13	0.08	0.04	–	–
Bi	COAX Bi03-2	24.9	26	0.49	0.32	0.13	0.08	0.07	0.05	0.03	0.01	–	–
Si	COAX Si08-2	22.2	87	1.63	1.42	1.08	0.70	0.49	0.34	0.25	0.17	–	–
Pi	COAX Pi12-2	27.0	45	1.44	1.27	0.93	0.57	0.40	0.30	0.21	0.13	0.06	-
Si	COAX Si08-3	22.2	87	2.84	1.55	1.17	0.74	0.49	0.36	0.28	0.17	–	–
Pi	COAX Pi12-3	27.0	45	2.97	1.27	0.93	0.57	0.40	0.30	0.21	0.13	0.06	–
Pi	COAX Pi12-3x2	27.0	45	5.93	2.54	1.86	1.14	0.81	0.59	0.42	0.25	0.13	-
L	MINI L7	22.2	87	1.53	1.04	0.61	0.53	0.42	0.34	0.21	0.14	–	–
L	MINI L14	22.2	87	3.11	2.20	1.21	0.95	0.83	0.68	0.51	0.28	–	–
L	MINI L28	22.2	87	5.40	3.54	2.22	1.89	1.57	1.17	0.76	0.36	–	–
L	MINI L56	22.2	87	10.8	7.42	4.24	3.60	2.97	2.33	1.72	0.91	–	–
M	MINI M5L	24.1	55	1.23	0.64	0.47	0.38	0.30	0.21	0.17	0.08	0.02	–
M	MINI M10L	24.1	55	2.33	1.21	0.83	0.74	0.64	0.44	0.25	0.13	0.04	–
M	MINI M20L	24.1	55	4.24	2.54	1.61	1.42	1.12	0.87	0.70	0.40	0.04	–
M	MINI M40L	24.1	55	8.48	4.66	2.97	2.54	2.12	1.50	0.91	0.40	0.11	–
X	MINI X5L	27.9	58	1.02	0.51	0.25	0.23	0.21	0.18	0.15	0.12	0.06	0.01
X	MINI X10L	27.9	58	1.61	0.74	0.51	0.44	0.34	0.28	0.21	0.15	0.08	0.02
X	MINI X20L	27.9	58	4.03	2.12	1.06	0.93	0.81	0.64	0.53	0.36	0.21	0.04
X	MINI X40L	27.9	58	6.78	3.18	2.12	1.91	1.48	1.27	1.06	0.85	0.36	0.08
L	CLASSIC L25	22.2	87	12.9	6.99	4.66	2.97	1.72	1.36	0.95	0.61	–	–
L	CLASSIC L50	22.2	87	23.1	12.1	8.05	5.30	2.97	2.33	1.70	1.02	–	–
L	CLASSIC L100	22.2	87	35.0	20.3	15.9	10.6	6.14	4.87	3.39	2.01	–	–
Si	COAX Si32-2	22.2	87	6.99	6.36	5.51	3.60	1.91	1.27	1.06	0.74	–	–
Si	COAX P6010 Si32-3x1	22.2	87	12.7	7.42	5.51	3.60	1.91	1.27	1.06	0.74	–	–
Si	COAX P6010 Si32-3x2	22.2	87	25.4	14.8	11.0	7.20	3.81	2.54	2.12	1.48	–	–
Si	COAX P6010 Si32-3x3	22.2	87	38.1	22.2	16.5	10.8	5.72	3.81	3.18	2.33	–	–
Si	COAX P6010 Si32-3x4	22.2	87	50.9	29.7	22.0	14.4	7.63	5.09	4.24	2.97	–	–
M	CLASSIC M25L	27.1	50	12.5	5.72	3.81	2.54	1.59	1.08	0.81	0.59	0.23	0.04
M	CLASSIC M50L	27.1	50	21.8	10.4	7.42	4.66	2.75	2.12	1.70	1.06	0.40	0.02
M	CLASSIC M100L	27.1	50	28.8	17.4	12.3	7.42	5.09	4.03	2.97	2.12	1.02	0.02
Pi	COAX Pi48-2	27.0	44	5.93	5.30	3.81	2.33	1.17	1.06	0.74	0.53	0.21	–
Pi	COAX P6010 Pi48-3x1	27.0	44	11.9	5.30	3.81	2.33	1.38	1.06	0.74	0.53	0.21	–
Pi	COAX P6010 Pi48-3x2	27.0	44	23.7	10.6	7.63	4.66	2.75	2.12	1.48	1.06	0.42	–
Pi	COAX P6010 Pi48-3x3	27.0	44	35.6	15.9	11.4	6.99	4.24	3.18	2.33	1.59	0.64	–
Pi	COAX P6010 Pi48-3x4	27.0	44	47.5	21.2	15.3	9.32	5.51	4.24	2.97	2.12	0.85	–
H	CLASSIC H40	29.5	87	5.93	4.45	3.18	1.91	0.85	0.64	0.42	0.30	0.21	0.20
H	CLASSIC H120	29.85	87	17.8	14.0	9.96	5.72	3.18	2.54	1.82	1.31	0.91	0.21
L	CLASSIC MP L150	22.2	87	61.4	34.3	25.4	15.9	8.05	5.72	3.60	1.61	–	–
L	CLASSIC MP L200	22.2	87	80.5	48.7	34.1	23.7	13.8	10.4	6.36	2.33	–	–
L	CLASSIC MP L300	22.2	87	97.5	63.6	48.3	31.1	19.1	15.0	11.0	6.57	–	–
L	CLASSIC MP L400	22.2	87	108	82.6	59.3	34.7	25.2	20.1	14.2	8.48	–	–
M	CLASSIC MP M150L	27.1	50	55.1	29.2	21.8	13.8	8.05	6.14	4.66	3.18	1.42	0.11
M	CLASSIC MP M200L	27.1	50	63.6	36.7	26.5	16.7	10.6	8.26	6.14	4.45	2.01	0.21
M	CLASSIC MP M300L	27.1	50	97.5	57.2	42.6	27.1	16.1	12.7	9.54	6.78	2.75	0.40
M	CLASSIC MP M400L	27.1	50	119	74.2	52.3	32.2	21.2	16.1	12.1	8.05	3.39	0.40
H	CLASSIC MP H240	29.85	87	35.6	26.7	18.9	10.6	6.14	4.87	3.81	2.54	1.82	0.40
H	CLASSIC MP H480	29.85	87	72.0	55.1	38.6	21.8	12.5	10.4	7.20	4.87	3.60	1.02
M	MAXI MLL200	27.1	87	102	57.2	38.4	20.1	10.2	6.99	5.09	2.33	1.02	0.02
M	MAXI MLL400	27.1	87	195	110	74.2	39.0	19.5	13.6	9.75	4.66	1.95	0.04
M	MAXI MLL800	27.1	87	373	210	142	74.2	37.3	26.1	18.6	8.90	3.81	0.08
M	MAXI MLL1200	27.1	87	540	303	206	108	55.1	37.9	27.1	12.9	5.51	0.11

EVACUATION TIME AT RECOMMENDED FEED PRESSURE

Pump series	Model/Design	Feed pressure	Air consumption	Evacuation time (s/cf) to reach different vacuum levels (-inHg)								
		psi	scfm	3	6	9	12	15	18	21	24	27
Si	COAX Si02-2	87	0.25	11.6	28.6	56.9	93.5	139	195	289	–	–
Bi	COAX Bi03-2	26	0.30	14.2	39.7	110	181	283	453	793	1445	–
Si	COAX Si08-2	87	0.93	3.97	8.78	15.6	25.5	39.7	59.5	87.8	–	–
Pi	COAX Pi12-2	45	1.00	4.81	9.06	16.4	31.2	51.0	76.5	113	181	-
Si	COAX Si08-3	87	0.93	2.83	7.08	13.6	22.7	36.8	56.7	82.2	–	–
Pi	COAX Pi12-3	45	2.00	2.27	6.52	13.9	28.3	48.2	73.7	110	178	–
Pi	COAX Pi12-3X2	45	1.00	1.13	3.40	7.08	14.2	24.1	36.8	56.7	90.7	-
L	MINI L7	87	1.04	2.63	8.78	20.4	34.3	51.3	73.1	108	–	–
L	MINI L14	87	2.08	1.81	4.82	10.2	16.7	24.9	36.3	52.4	–	–
L	MINI L28	87	4.17	1.33	3.12	5.67	9.07	13.0	19.5	31.4	–	–
L	MINI L56	87	8.48	0.65	1.50	2.83	4.53	6.52	9.35	14.2	–	–
M	MINI M5L	55	0.81	5.67	17.3	33.1	51.0	73.7	108	167	314	–
M	MINI M10L	55	1.61	3.68	8.78	16.1	25.5	36.8	56.7	90.7	201	–
M	MINI M20L	55	3.18	1.47	3.97	7.37	11.9	18.1	28.3	48.2	105	–
M	MINI M40L	55	6.36	0.85	2.10	3.68	5.95	9.07	14.2	26.9	45.3	–
X	MINI X5L	58	0.83	4.82	23.2	48.2	76.5	110	153	210	300	637
X	MINI X10L	58	1.67	3.12	13.3	26.6	42.5	62.3	87.8	122	187	397
X	MINI X20L	58	3.39	1.56	5.67	11.3	18.4	27.5	39.7	53.8	76.5	144
X	MINI X40L	58	6.57	1.08	3.40	6.23	9.35	13.6	19.3	34.0	62.3	90.7
L	CLASSIC L25	87	3.81	1.19	2.10	3.40	5.95	10.2	15.9	24.9	–	–
L	CLASSIC L50	87	7.42	0.42	0.93	1.70	3.12	5.38	8.22	12.7	–	–
L	CLASSIC L100	87	14.8	0.23	0.51	0.93	1.70	2.83	4.25	6.52	–	–
Si	COAX Si32-2	87	3.71	6.99	6.36	5.51	3.60	1.91	1.27	1.06	0.74	–
Si	P6010 Si32-3x1	87	3.71	0.57	1.42	2.83	5.10	9.35	15.0	22.7	–	–
Si	P6010 Si32-3x2	87	7.42	0.28	0.71	1.42	2.55	4.82	7.65	11.3	–	–
Si	P6010 Si32-3X3	87	11.1	0.20	0.48	0.93	1.70	3.12	5.10	7.65	–	–
Si	P6010 Si32-3X4	87	14.8	0.14	0.37	0.71	1.27	2.35	3.68	5.67	–	–
M	CLASSIC M25L	50	4.03	0.65	1.64	3.40	6.52	11.3	18.1	28.0	45.3	110
M	CLASSIC M50L	50	7.84	0.40	0.93	1.76	3.40	5.95	9.35	14.2	23.2	70.8
M	CLASSIC M100L	50	15.9	0.42	0.76	1.27	2.27	3.40	5.10	7.37	12.2	34.0
Pi	COAX Pi48-2	44	4.24	0.85	1.98	3.68	7.37	13.0	19.8	28.3	45.3	
Pi	P6010 Pi48-3x1	44	4.24	0.57	1.70	3.40	8.50	12.7	19.8	28.3	45.3	113
Pi	P6010 Pi48-3x2	44	8.48	0.28	0.85	1.70	3.68	6.52	9.92	14.2	22.7	56.7
Pi	P6010 Pi48-3x3	44	12.7	0.20	0.57	1.13	2.35	4.25	6.52	9.35	15.0	36.8
Pi	P6010 Pi48-3x4	44	17.0	0.14	0.42	0.85	1.78	3.12	5.10	7.08	11.3	28.3
H	CLASSIC H40	87	5.51	0.91	2.12	4.25	9.07	18.1	31.2	48.2	73.7	110
H	CLASSIC H120	87	16.1	0.51	0.93	1.70	3.12	5.10	7.65	11.9	17.6	36.8
L	CLASSIC MP L150	87	22.2	0.14	0.34	0.59	1.13	1.98	3.40	6.23	–	–
L	CLASSIC MP L200	87	29.7	0.11	0.25	0.45	0.85	1.42	1.98	3.68	–	–
L	CLASSIC MP L300	87	44.5	0.11	0.23	0.37	0.57	0.85	1.42	2.27	–	–
L	CLASSIC MP L400	87	59.3	0.11	0.20	0.31	0.57	0.85	1.13	1.70	–	–
M	CLASSIC MP M150L	50	23.9	0.20	0.40	0.71	1.42	2.12	3.12	4.82	7.93	21.5
M	CLASSIC MP M200L	50	32.0	0.14	0.31	0.59	1.13	1.70	2.55	3.68	5.95	15.3
M	CLASSIC MP M300L	50	47.9	0.11	0.25	0.42	0.85	1.13	1.70	2.55	3.97	10.2
M	CLASSIC MP M400L	50	63.6	0.08	0.17	0.31	0.57	0.85	1.42	1.98	3.12	8.22
H	CLASSIC MP H240	87	32.2	0.17	0.42	0.85	1.70	2.83	4.25	6.23	9.07	18.1
H	CLASSIC MP H480	87	63.6	0.11	0.23	0.45	0.85	1.42	2.27	3.12	4.53	9.35
M	MAXI MLL200	87	29.7	0.08	0.23	0.40	0.85	1.70	2.83	4.53	8.22	23.2
M	MAXI MLL400	87	59.3	0.04	0.11	0.20	0.42	0.85	1.42	2.27	4.25	11.6
M	MAXI MLL800	87	119	0.02	0.05	0.10	0.23	0.40	0.68	1.13	2.04	5.67
M	MAXI MLL1200	87	178	0.01	0.03	0.07	0.15	0.25	0.45	0.76	1.36	3.97

RECOMMENDED HOSE DIMENSIONS IN IN. (INTERNAL DIAMETER)

Pump design	Compressed air	Vacuum	Exhaust
P2010	> 0.10	> 0.10	> 0.31
P3010	> 0.16	> 0.31	> 0.39
VGS3010	> 0.16	> 0.31	> 0.39
P6010 Pi48-3X1	> 0.24	> 0.47	> 0.59
P6010 Si32-3X1	> 0.16	> 0.47	> 0.59
P6010 Pi48-3X2	> 0.31	> 0.59	> 0.75
P6010 Si32-3X2	> 0.16	> 0.59	> 0.75
P6010 Pi48-3X3	> 0.39	> 0.75	> 0.87
P6010 Si32-3X3	> 0.31	> 0.75	> 0.87
P6010 Pi48-3X4	> 0.39	> 0.87	> 0.98
P6010 Si32-3X4	> 0.31	> 0.87	> 0.98
M5L	> 0.08	> 0.24	> 0.31
M10L, L7	> 0.08	> 0.31	> 0.39
M20L, L14	> 0.16	> 0.39	> 0.47
M25L / L25 / L28	> 0.16	> 0.47	> 0.47
M40L	> 0.24	> 0.47	> 0.59
M50L / L50 / L56	> 0.24	> 0.59	> 0.59
M100L / L100	> 0.31	> 0.75	> 0.87
M150L / L150	> 0.31	> 0.98	> 1.26
MLL200 / L200 / M200L	> 0.39	> 1.26	> 1.57
M300L / L300	> 0.47	> 1.57	> 2.36
MLL400 / M400L / L400	> 0.47	> 1.57	> 2.36
MLL800	> 0.59	> 1.97	> 2.95
MLL1200	> 0.79	> 2.95	> 3.94
X5L	> 0.08	> 0.16	> 0.31
X10L	> 0.16	> 0.24	> 0.31
X20L	> 0.24	> 0.31	> 0.39
X40L	> 0.24	> 0.39	> 0.47
H40	> 0.24	> 0.39	> 0.47
H120	> 0.35	> 0.59	> 0.75
H240	> 0.39	> 0.75	> 1.26
H480	> 0.47	> 1.57	> 1.97

Applies to hoses up to 6.6 feet long.

IMPORTANT!

A very important part of the vacuum system is correctly dimensioned hoses and couplings. To obtain the highest possible performance from each vacuum pump, please consult the table above.

RESISTANCE OF VARIOUS MATERIALS

Resistance	PA	PPS	POM	ABS	PTFE	AL	NBR	EPDM	Viton® fluoroelastomers*)
Weather, ozone	—	+++	+	++	+++	++	+	+++	+++
Heat, aging	++	+++	++	+	+++	+++	++	++	+++
Oil, gasoline	++	+++	++	+	+++	+	+++	—	+++
Hydrolysis	—	+++	++	+	+++	+++	++	++	++
Acid and alkali	+	+++	+	—	+++	—	++	+++	++
Acetone	+++	+++	+++	—	+++	+++	—	+++	—
Ammonia	+	++	—	—	+++	++	+	+++	—
Amyl alcohol	+++	+++	+++	—	+++	++	++	+++	++
Benzene	+++	+++	+++	—	+++	++	—	—	+++
Butanol	—	+++	+++	+++	+++	++	++	++	+++
Cyclohexane	+++	+++	+++	—	+++	+++	++	—	+++
Ethanol	+++	+++	+++	++	+++	++	+	+++	+++
Ethyl acetate	+++	+++	+++	—	+++	++	—	++	—
Hexane	++	+++	+++	—	+++	+++	+++	—	+++
Carbon tetrachloride	—	+++	++	—	+++	—	—	—	+++
Chlorobenzene	—	+++	—	—	+++	+++	—	—	+++
Chloroform	+++	+++	+++	—	+++	+	—	—	+++
Methanol	++	+++	+++	—	+++	++	+++	+++	+
Methylene chloride	+	+++	++	—	+++	+	—	++	+++
Methyl ethyl ketone, MEK	+++	+++	+	—	+++	++	—	+++	—
NaOH	+++	+++	+	+	+++	—	++	+++	++
Propanol	—	+++	+++	++	+++	++	+++	+++	+++
Sulphuric acid	—	+++	—	++	+++	—	+	++	+++
Tetrahydrofuran	+++	+++	+++	—	+++	—	—	++	—
Tetrachlorethylene	+++	+++	+++	—	+++	—	—	—	+++
Toulene	+++	+++	+	—	+++	+++	—	—	+++
Trichlorethane	+	+++	+++	—	+++	—	—	—	+++
Trichlorethylene	+	+++	—	—	+++	—	—	—	+++
Xylene	+++	+++	+++	—	+++	++	—	—	+++
Acetic acid	—	+++	—	—	+++	+	+	+++	++

+++ Recommended
++ Good, minor chemical attack
+ Limited, moderate chemical attack, limited service
– Not recommended

*) Viton® is a registered trademark of DuPont Performance Elastomers.

MATERIALS

PA	Polyamide, Nylon® , for example
PPS	Composite, Polyphenylene sulphide, Ryton®
POM	Acetal plastic, Polyoxymethylene, Delrin® , and Hostaform® , for example
ABS	Thermoplastic
PTFE	Polytetrafluoroethylene, Teflon® , for example
AL	Aluminium
NBR	Nitrile
EPDM	Ethylene Propylene Diene Rubber
Viton®	Fluor rubber FPM (FKM)
CuZn	Brass
SS	Stainless Steel
PP	Thermoplastic (Polypropen/Polypropylene)

MODELS

P2010

P2010 uses the patented COAX® technology and is a small “inline” ejector that can be directly mounted between the compressed-air hose and the vacuum hose. The ejector works best at low feed pressures, has a very low weight and can be easily cleaned and exchanged whenever needed. The main area of usage is in ”pick-and-place” applications handling small components such as, for example, those of the electronics industry.

P3010

P3010 uses the patented COAX® technology, which makes it small, robust and easy to install. This vacuum pump consists of a cassette with integrated nozzles, non-return valves, silencers and filters for compressed air and vacuum. The P3010 vacuum pump series includes control and monitoring functions such as solenoid valves, vacuum switches and quick-release modules. The PIAB P3010 enables you to decide for yourself the functions you need, and you can eliminate all costly, needless refinements. The performance can therefore be upgraded in pace with your changing needs.

P3010 AVM™

The P3010 AVM™ is a compact and modular vacuum pump with integrated COAX® technology and Automatic Vacuum Management functionality. It has been developed for handling parts in applications with the highest demand on performance, availability, energy saving, flexibility and reliability. Highly automated systems with industrial robots and machines used for handling sheet metal, plastic parts and corrugated cardboard material are typical examples. The compact size and modular, in-line design simplify installation and maintenance. The integrated COAX® guarantees energy efficient and reliable vacuum performance even at really low feed pressures.

PMAT COAX®

The PMAT vacuum pumps are based on the Pi12-2 COAX® technology and intended to be used in decentralized vacuum systems. The Pi12-2 COAX® guarantees energy efficient and reliable vacuum performance even at very low feed pressures. The pumps are all equipped with a built-in check valve on a blow-off port for a reliable and efficient release of the handled object. The separate suction cup can be connected via a T-slot or a 3/8" thread. The mounting fits standard robot end-of-arm tooling found in the automotive industry (ball joint and lock-pin connections). A selection of models provide features such as low profile design, air saving function (Vacustat) and safety function (Vactrap™).

PMAT VACUSTAT

The Vacustat Pi12-2 COAX® is a pump unit with an integrated energy-saving device that means virtually no compressed air consumption in sealed and decentralized applications, such as sheet metal handling. It is available in lock pin, ball joint and apple core mounting in accordance with industry standards for end of arm tooling.

P6010

Based upon the patented COAX® technology, the PIAB P6010 provides up to 40% more flow than conventional vacuum pumps, while still reducing overall energy consumption. A durable, maintenance-free, design makes the P6010 ideally suited for automated material handling and other manufacturing processes in the automotive, robotic, graphics and packaging industries. The P6010 provides powerful, whisper-quiet, and non-heat generating suction at extremely low feed pressures. Additionally, the pump’s compact size makes it possible to mount closer to the point of suction, thus reducing compressed-air requirements and saving energy.

P6010 AVM™

P6010, based upon the patented COAX® technology, is available with an integrated control option for highly automated systems – the Automatic Vacuum Management (AVM™). This option can reduce air consumption by up to 90%, when compared to continuously operating systems. Featuring a vacuum sensing capability, the AVM™ instantly shuts off air consumption when the set vacuum level is reached. When the vacuum is no longer required after a completed work cycle, the product release time is reduced by a high capacity positive pressure blow-off function. The AVM™'s high capacity blow-off function makes it ideal for handling non-leaking parts, such as glass and sheet metal.

P6010 PCC

P6010, based upon the patented COAX® technology, is available with an integrated control option designed to fine-tune vacuum pump performance and lower energy consumption – the PIAB Cruise Control (PCC). Offering many advantages for leak-prone materials, such as paper, plastic bags and corrugated cardboard, PCC is ideally suited for automated material handling processes in the graphics and packaging industries. PIAB's PCC automatically maintains a pre-set level of vacuum to ensure that a consistent vacuum level, and therefore a secure grip, is provided at the suction point. This feature is reliable during fluctuations in vacuum pressure, caused by product variations or changes in cycle time.

MINI

These are small and lightweight vacuum pumps, MINI, with large capacity that can compensate for leakages. The MINI pumps are available with different characteristics, accessories and designs so that they can be adapted to different applications. The MINI pump can be mounted onto various types of bottom plates and, through this, be given numerous connection possibilities. They can also be fitted with valves and/or a vacuum sensor. By doing so, a complete system (Mini System) is created, and such a system can, when necessary, be dimensioned for larger flows. To the MINI vacuum pumps there are connection plates for different installation alternatives.

CLASSIC

PIAB CLASSIC vacuum pump series in various sizes and characteristics. Large capacity despite its small size and low weight. Suitable for a great number of applications as a separate vacuum source or as the base unit of a system with medium capacity requirements. Flexible and simple design that can be provided with an energy-saving system.

CLASSIC MP

A compact vacuum pump for large flows and deep vacuum levels, that is especially suitable when high productivity and secure function are required in mounting, packaging and automation processes. This vacuum pump is easy to control and very reliable. Because it is almost maintenance-free the operation stoppages are negligible. To improve the economy even more it can be provided with an energy saving system.

MAXI

Large vacuum pump for applications where large volumes need to be evacuated or to compensate for large leakage flows. Can also be used for vacuum conveying. May also be provided with an energy-saving system and central exhaust.

COAX® CARTRIDGE MICRO

Bi03-2

- Two-stage COAX® cartridge - MICRO - probably the world's smallest multistage vacuum ejector.
- Vacuum level to 24.9 -inHg at extremely low feed pressure.
- High operational reliability in case of fluctuating or low compressed-air pressure.
- The low weight makes it suitable to integrate close to the suction point in high speed pick-and-place applications of small objects.
- Suitable for handling sealed objects.

TECHNICAL DATA

Description	Unit	Value
Feed pressure, max.	psi	101.5
Temperature range	°F	14-176
Weight	oz	0.05-0.08
Material		Al, NBR, PA, SS

VACUUM FLOW

Feed pressure	Air consumption	Vacuum flow (scfm) at different vacuum levels (-inHg)								Max vacuum
psi	scfm	0	3	6	9	12	15	18	21	-inHg
16	0.21	0.36	0.21	0.08	0.06	0.03	—	—	—	15.0
26	0.30	0.49	0.32	0.13	0.08	0.07	0.05	0.03	0.01	24.9
32	0.36	0.57	0.40	0.19	0.08	0.05	0.04	0.02	0.01	24.6

EVACUATION TIME

Feed pressure	Air consumption	Evacuation time (s/cf) to reach different vacuum levels (-inHg)								Max vacuum
psi	scfm	3	6	9	12	15	18	21	24	-inHg
16	0.21	19.8	82.2	167	312	793	—	—	—	15.0
26	0.30	14.2	39.7	110	181	283	453	793	1445	24.9
32	0.36	11.3	31.2	93.5	181	312	510	907	1756	24.6

BLOW FLOW

Feed pressure	Air consumption	Blow flow (scfm) at different pressure levels (psi)												Max pressure
psi	scfm	0	3	6	9	10	12	13	15	16	17	19	20	psi
87	0.78	1.29	1.25	1.14	0.97	0.89	0.87	0.87	0.87	0.87	0.87	0.87	0.87	20

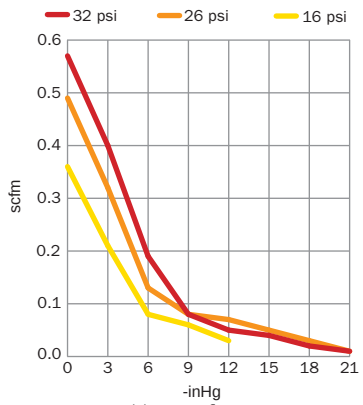

Vacuum flow

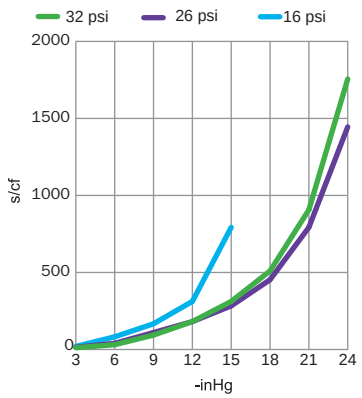

Evacuation time

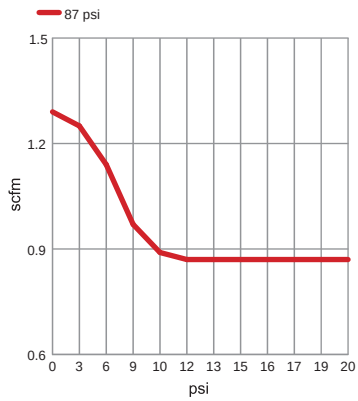

Blow flow

ORDERING INFORMATION

	Description	Part No.
A	COAX® cartridge MICRO Bi03-2	01.06.966
B	COAX® cartridge MICRO Bi03-2, holding cap	01.06.968

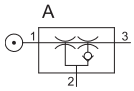

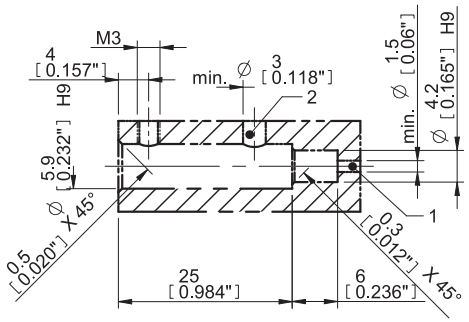

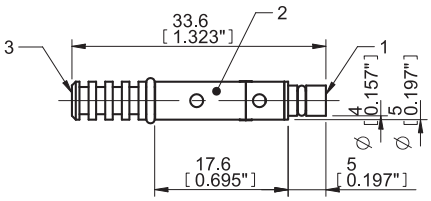

A

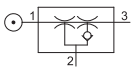

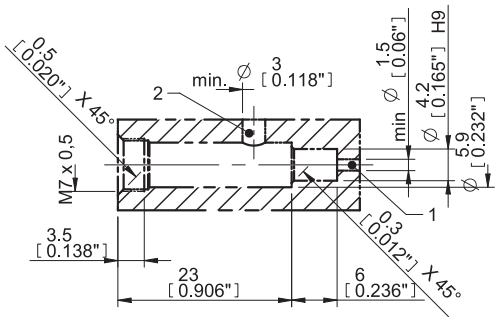

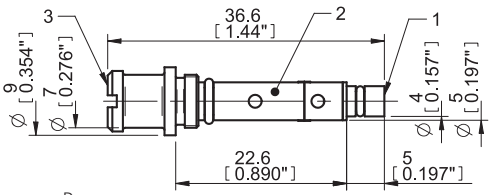

B

COAX® CARTRIDGE MICRO

Si02-2

- Two-stage COAX® cartridge - MICRO - probably the world's smallest multistage vacuum ejector.
- Large vacuum flow in relation to energy consumption.
- Good for handling porous materials or if surface leakage is present.
- The low weight makes it suitable to integrate close to the suction point in high speed pick-and-place applications of small objects.

TECHNICAL DATA

Description	Unit	Value
Feed pressure, max.	psi	101.5
Temperature range	°F	14-176
Weight	oz	0.05-0.08
Material		Al, NBR, PA, SS

VACUUM FLOW

Feed pressure	Air consumption	Vacuum flow (scfm) at different vacuum levels (-inHg)								Max vacuum
psi	scfm	0	3	6	9	12	15	18	21	-inHg
58	0.19	0.53	0.32	0.17	0.15	0.11	0.06	—	—	18.0
72.5	0.21	0.57	0.40	0.19	0.17	0.15	0.11	0.04	—	21.0
87	0.25	0.59	0.44	0.25	0.17	0.15	0.13	0.08	0.04	22.2

EVACUATION TIME

Feed pressure	Air consumption	Evacuation time (s/cf) to reach different vacuum levels (-inHg)							Max vacuum
psi	scfm	3	6	9	12	15	18	21	-inHg
58	0.19	14.2	38.8	76.5	125	195	—	—	18.0
72.5	0.21	12.2	32.6	66.0	105	150	232	—	21.0
87	0.25	11.6	28.6	56.9	93.5	139	195	289	22.2

BLOW FLOW

Feed pressure	Air consumption	Blow flow (scfm) at different pressure levels (psi)								Max pressure
psi	scfm	0	2	3	4	6	7	9	10	psi
87	0.25	0.85	0.72	0.47	0.44	0.42	0.38	0.36	0.32	10

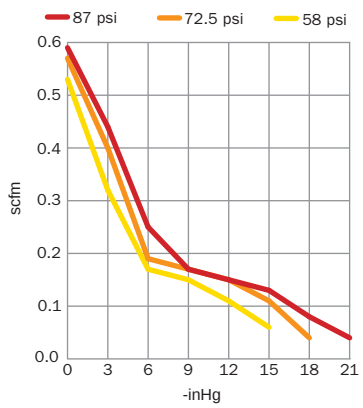

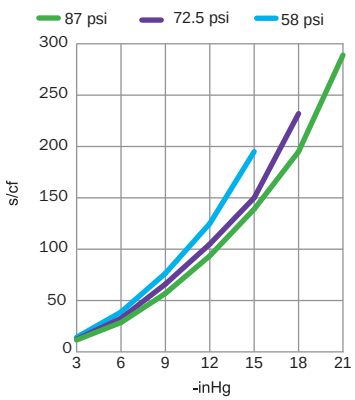

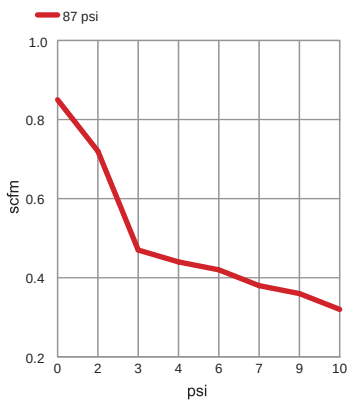

Blow flow

ORDERING INFORMATION

	Description	Part No.
A	COAX® cartridge MICRO Si02-2	01.13.591
B	COAX® cartridge MICRO Si02-2, holding cap	01.13.593

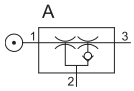

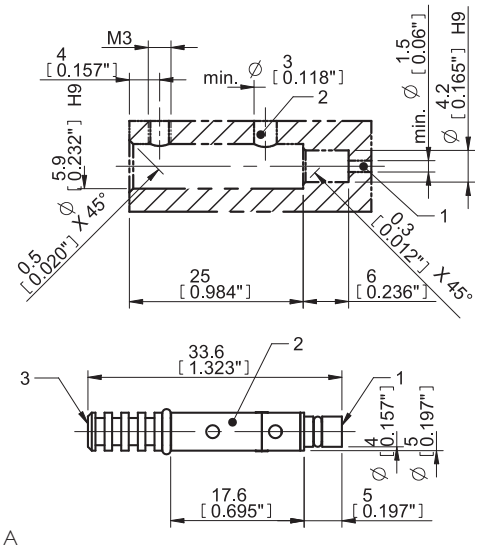

A

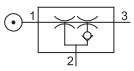

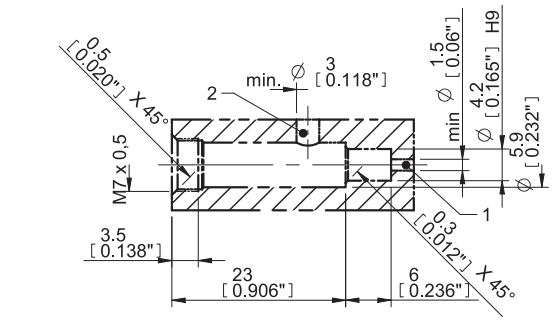

B

COAX® CARTRIDGE MINI

Pi12-2

- Two-stage COAX® cartridge - MINI - with small mounting dimensions.
- Vacuum level to 27 -inHg at low feed pressures.
- High operational reliability in case of fluctuating or low compressed-air pressure.
- Suitable for handling sealed objects.

TECHNICAL DATA

Description	Unit	Value
Feed pressure, max.	psi	101.5
Temperature range	°F	14-176
Weight	oz	0.09-0.34
Material		Al, NBR, PA, SS

VACUUM FLOW

Feed pressure	Air consumption	Vacuum flow (scfm) at different vacuum levels (-inHg)									Max vacuum
psi	scfm	0	3	6	9	12	15	18	21	24	-inHg
25	0.61	1.21	0.85	0.47	0.32	0.15	—	—	—	—	14.7
32	0.72	1.36	1.02	0.61	0.42	0.30	0.17	0.04	—	—	19.2
45	0.93	1.44	1.27	0.93	0.57	0.40	0.30	0.21	0.13	0.06	27.0
58	1.12	1.40	1.27	1.10	0.83	0.51	0.25	0.21	0.13	0.04	25.2

EVACUATION TIME

Feed pressure	Air consumption	Evacuation time (s/cf) to reach different vacuum levels (-inHg)								Max vacuum
psi	scfm	3	6	9	12	15	18	21	24	-inHg
25	0.61	7.93	15.9	32.0	60.3	—	—	—	—	14.7
32	0.72	5.67	11.9	24.1	42.5	65.2	85.0	—	—	19.2
45	0.93	4.82	9.07	16.4	31.2	51.0	76.5	113	181	27.0
58	1.12	5.10	9.35	15.3	24.1	42.5	70.8	108	201	25.2

BLOW FLOW

Feed pressure	Air consumption	Blow flow (scfm) at different pressure levels (psi)												Max pressure
psi	scfm	0	3	6	9	10	12	13	15	16	17	19	20	psi
87	1.59	2.90	2.88	2.82	2.37	2.18	2.18	2.18	2.18	2.12	2.01	1.82	1.67	20

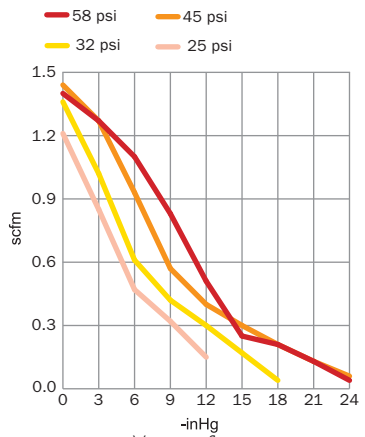

Vacuum flow

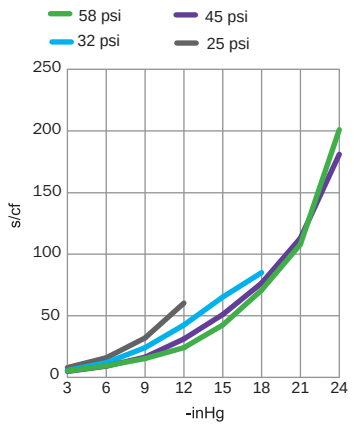

Evacuation time

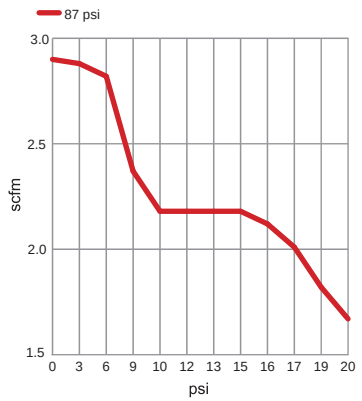

Blow flow

ORDERING INFORMATION

	Description	Part No.
C	COAX® cartridge MINI Pi12-2	01.06.922
A	COAX® cartridge MINI Pi12-2, holding cap	01.06.924
D	COAX® cartridge MINI Pi12-2, extra non-return valve	01.06.963
B	COAX® cartridge MINI Pi12-2, holding cap, extra non-return valve	01.06.964

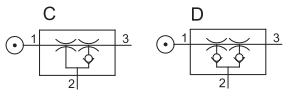

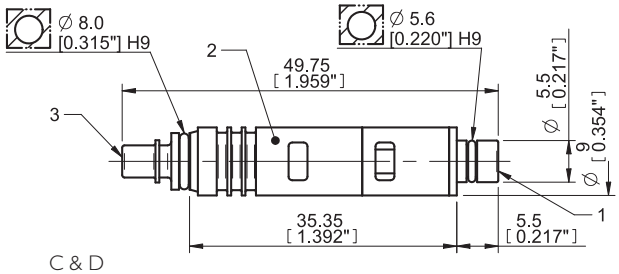

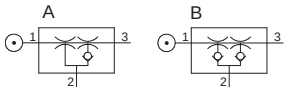

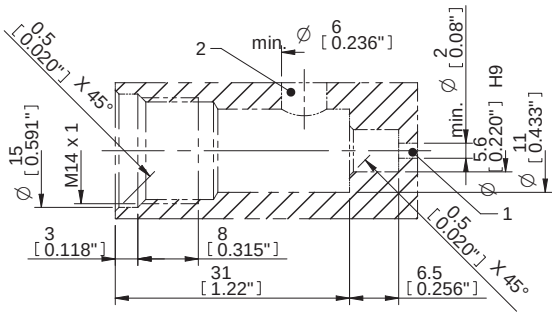

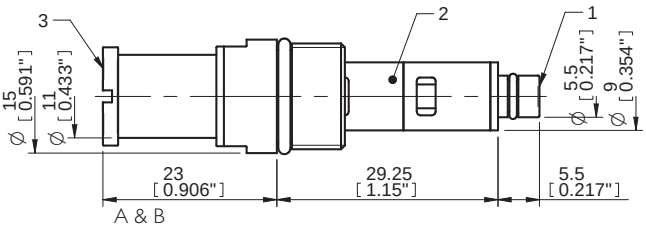

ORDERING INFORMATION, ACCESSORIES

Description	Part No.
Silencer COAX® MINI	01.11.977

COAX® CARTRIDGE MINI

Si08-2

- Two-stage COAX® cartridge - MINI - with small mounting dimensions.
- Large vacuum flow in relation to energy consumption.
- Good for handling porous materials or if surface leakage is present.

TECHNICAL DATA

Description	Unit	Value
Feed pressure, max.	psi	101.5
Temperature range	°F	14-176
Weight	oz	0.10-0.35
Material		Al, NBR, PA, SS

VACUUM FLOW

Feed pressure	Air consumption	Vacuum flow (scfm) at different vacuum levels (-inHg)								Max vacuum
psi	scfm	0	3	6	9	12	15	18	21	-inHg
58	0.66	1.50	1.12	0.72	0.55	0.38	0.19	0.02	—	18.0
72.5	0.81	1.63	1.29	0.91	0.61	0.49	0.32	0.17	0.02	21.0
87	0.93	1.63	1.42	1.08	0.70	0.49	0.34	0.25	0.17	22.2

EVACUATION TIME

Feed pressure	Air consumption	Evacuation time (s/cf) to reach different vacuum levels (-inHg)							Max vacuum
psi	scfm	3	6	9	12	15	18	21	-inHg
58	0.66	4.53	11.0	20.4	34.0	53.8	110	—	18.0
72.5	0.81	3.97	9.63	17.6	28.3	42.5	68.0	130	21.0
87	0.93	3.97	8.78	15.6	25.5	39.7	59.5	87.8	22.2

BLOW FLOW

Feed pressure	Air consumption	Blow flow (scfm) at different pressure levels (psi)								Max pressure
psi	scfm	0	2	3	4	6	7	9	10	psi
87	0.93	2.56	2.39	2.12	1.78	1.65	1.55	1.38	1.12	10

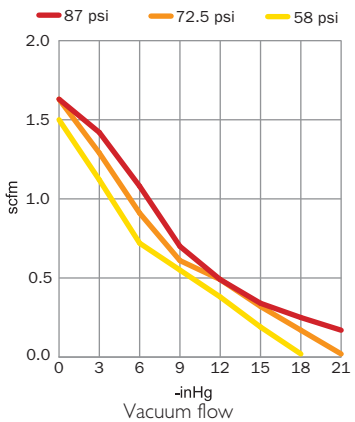

Vacuum flow

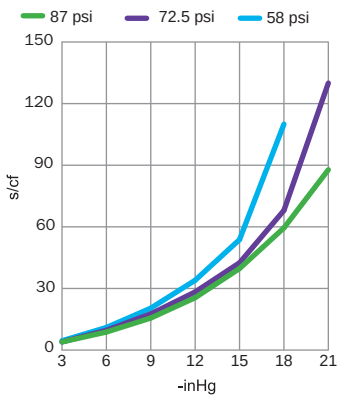

Evacuation time

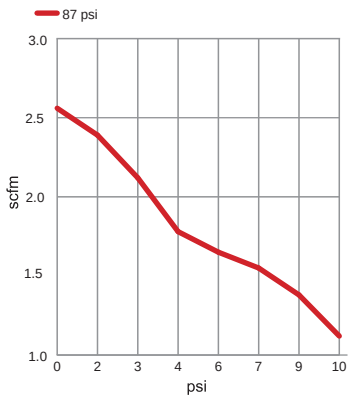

Blow flow

Specifications subject to change without notice.

ORDERING INFORMATION

	Description	Part No.
C	COAX® cartridge MINI Si08-2	01.13.583
A	COAX® cartridge MINI Si08-2, holding cap	01.13.585
D	COAX® cartridge MINI Si08-2, extra non-return valve	01.13.587
B	COAX® cartridge MINI Si08-2, holding cap, extra non-return valve	01.13.589

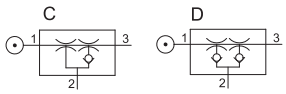

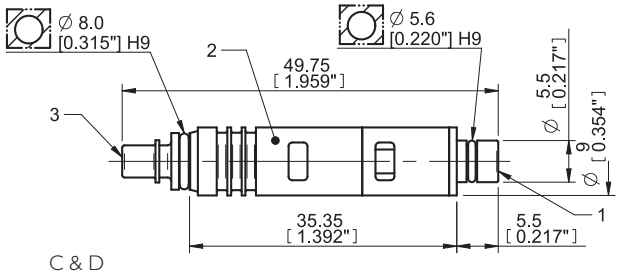

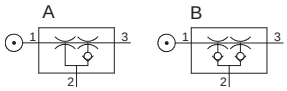

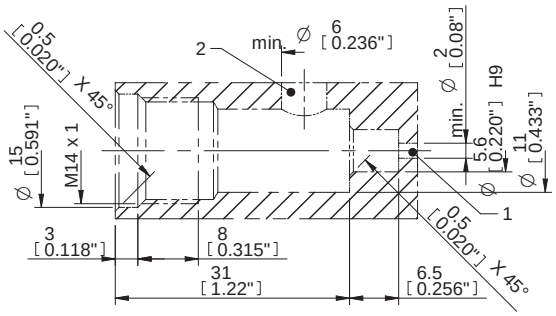

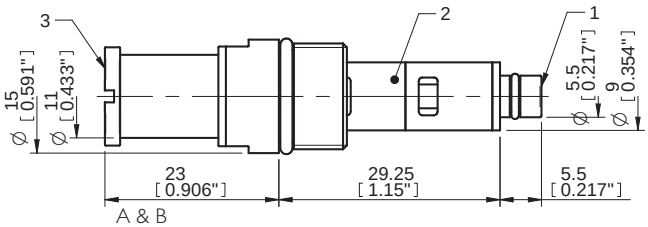

ORDERING INFORMATION, ACCESSORIES

Description	Part No.
Silencer COAX® MINI	01.11.977

COAX® CARTRIDGE MINI

Pi12-3

- Three-stage COAX® cartridge - MINI - with high initial vacuum flow.
- Vacuum level to 27 -inHg at low feed pressure.
- High system reliability in case of fluctuating or low feed pressure.
- Suitable for handling sealed objects with high pick-up speed.

TECHNICAL DATA

Description	Unit	Value
Feed pressure, max.	psi	101.5
Temperature range	°F	14-176
Weight	oz	0.17-0.44
Material		Al, NBR, PA, SS

VACUUM FLOW

Feed pressure	Air consumption	Vacuum flow (scfm) at different vacuum levels (-inHg)									Max vacuum
psi	scfm	0	3	6	9	12	15	18	21	24	-inHg
25	0.61	1.91	0.85	0.47	0.32	0.15	—	—	—	—	14.7
32	0.72	2.33	1.02	0.61	0.42	0.30	0.17	0.04	—	—	19.2
45	0.93	2.97	1.27	0.93	0.57	0.40	0.30	0.21	0.13	0.06	27.0
58	1.12	2.97	1.48	1.10	0.83	0.51	0.25	0.21	0.13	0.04	25.2

EVACUATION TIME

Feed pressure	Air consumption	Evacuation time (s/cf) to reach different vacuum levels (-inHg)								Max vacuum
psi	scfm	3	6	9	12	15	18	21	24	-inHg
25	0.61	4.25	13.0	28.3	56.7	—	—	—	—	14.7
32	0.72	2.83	9.07	21.2	39.7	62.3	82.2	—	—	19.2
45	0.93	2.27	6.52	13.9	28.3	48.2	73.7	110	178	27.0
58	1.12	2.55	6.80	12.7	21.5	39.7	68.0	105	198	25.2

BLOW FLOW

Feed pressure	Air consumption	Blow flow (scfm) at different pressure levels (psi)												Max pressure
psi	scfm	0	3	6	9	10	12	13	15	16	17	19	20	psi
87	1.59	3.96	2.97	2.82	2.37	2.18	2.18	2.18	2.18	2.12	2.01	1.82	1.67	20

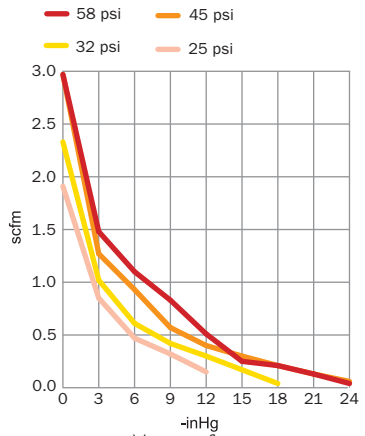

Vacuum flow

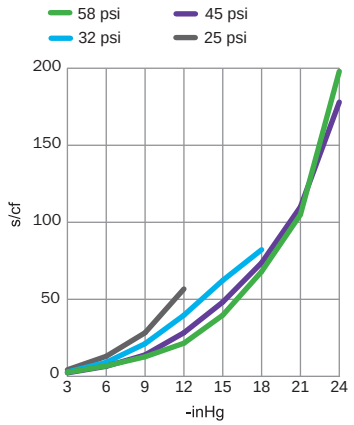

Evacuation time

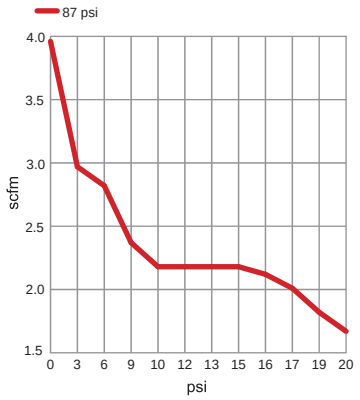

Blow flow

Specifications subject to change without notice.

ORDERING INFORMATION

	Description	Part No.
C	COAX® cartridge MINI Pi12-3	01.06.895
A	COAX® cartridge MINI Pi12-3, holding cap	01.06.923
D	COAX® cartridge MINI Pi12-3, extra non-return valve	01.06.956
B	COAX® cartridge MINI Pi12-3, holding cap, extra non-return valve	01.06.957

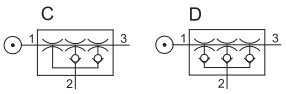

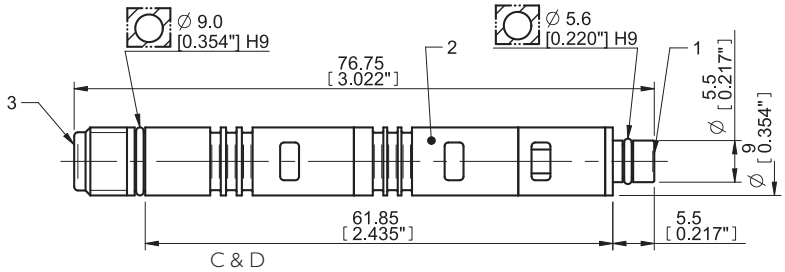

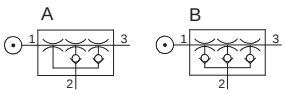

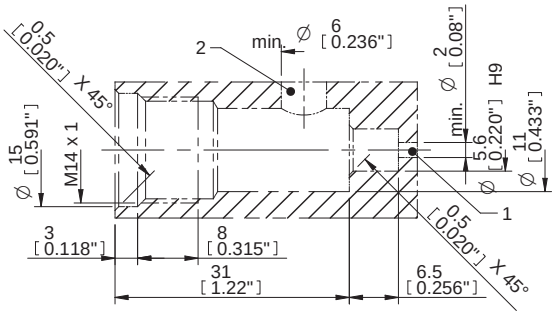

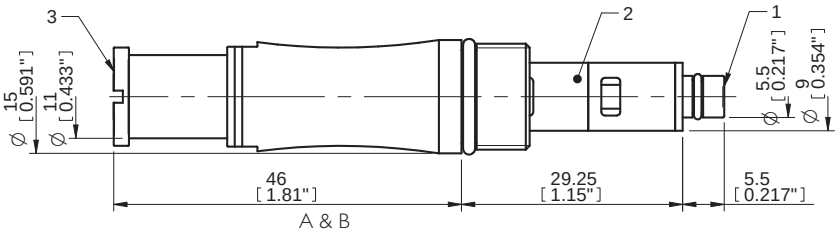

ORDERING INFORMATION, ACCESSORIES

Description	Part No.
Silencer COAX® MINI	01.11.977
Exhaust adapter	01.06.344

COAX® CARTRIDGE MINI

Si08-3

- Three-stage COAX® cartridge - MINI - with extra high initial vacuum flow.
- Large vacuum flow in relation to energy consumption.
- Good for handling porous materials or if surface leakage is present. Rrecommended for high speed applications.

TECHNICAL DATA

Description	Unit	Value
Feed pressure, max.	psi	101.5
Temperature range	°F	14-176
Weight	oz	0.17-0.45
Material		Al, NBR, PA, SS

VACUUM FLOW

Feed pressure	Air consumption	Vacuum flow (scfm) at dfferent vacuum levels (-inHg)								Max vacuum
psi	scfm	0	3	6	9	12	15	18	21	-inHg
58	0.66	2.33	1.21	0.76	0.55	0.38	0.19	—	—	18.0
72.5	0.81	2.61	1.38	0.97	0.61	0.49	0.32	0.17	0.02	21.0
87	0.93	2.84	1.55	1.17	0.74	0.49	0.36	0.28	0.17	22.2

EVACUATION TIME

Feed pressure	Air consumption	Evacuation time (s/cf) to reach different vacuum levels (-inHg)							Max vacuum
psi	scfm	3	6	9	12	15	18	21	-inHg
58	0.66	3.40	9.35	18.7	31.2	53.8	—	—	18.0
72.5	0.81	3.12	8.22	15.6	25.5	42.5	65.2	130	21.0
87	0.93	2.83	7.08	13.6	22.7	36.8	56.7	82.2	22.2

BLOW FLOW

Feed pressure	Air consumption	Blow flow (scfm) at different pressure levels (psi)								Max pressure
psi	scfm	0	2	3	4	6	7	9	10	psi
87	0.93	3.77	2.46	2.18	1.82	1.70	1.59	1.40	1.12	10

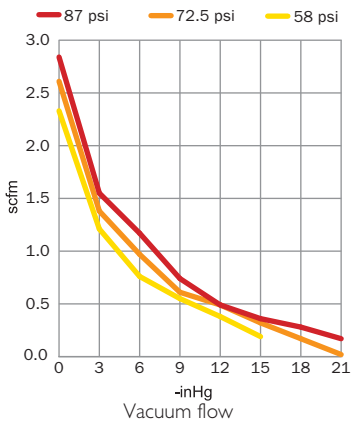

Vacuum flow

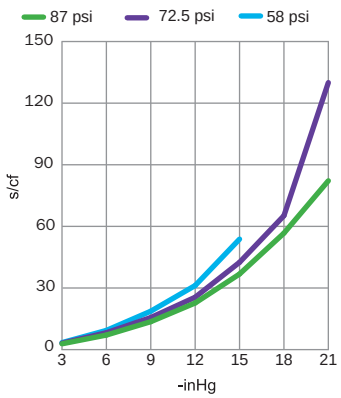

Evacuation time

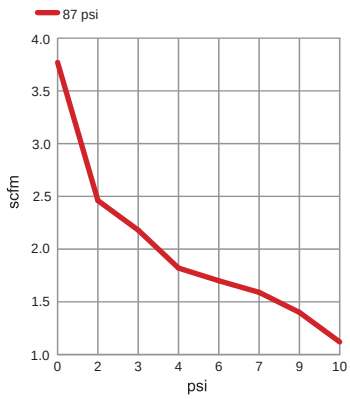

Blow flow

ORDERING INFORMATION

	Description	Part No.
C	COAX® cartridge MINI Si08-3	01.13.214
A	COAX® cartridge MINI Si08-3, holding cap	01.13.572
D	COAX® cartridge MINI Si08-3, extra non-return valve	01.13.575
B	COAX® cartridge MINI Si08-3, holding cap, extra non-return valve	01.13.577

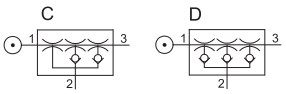

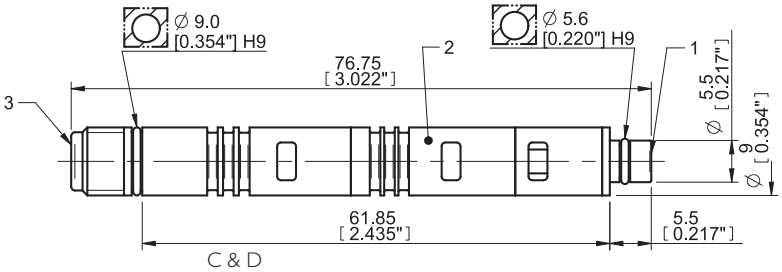

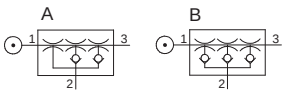

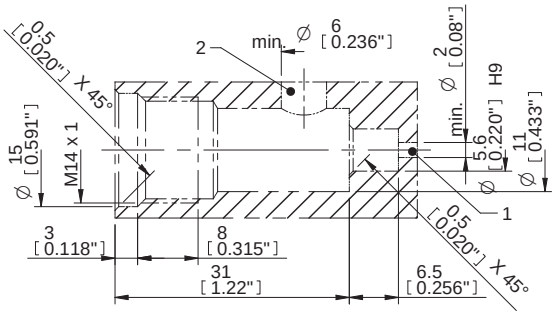

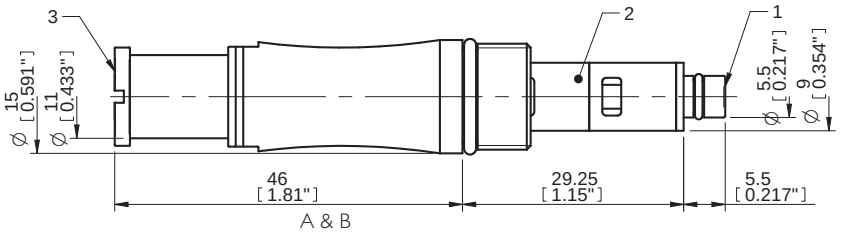

ORDERING INFORMATION, ACCESSORIES

Description	Part No.
Silencer COAX® MINI	01.11.977
Exhaust adapter	01.06.344

COAX® CARTRIDGE MINI

Pi12-3 FS

- Three-stage COAX® cartridge - MINI - with high initial vacuum flow.
- Includes a flow-through silencer and a built-in vacuum filter for harsh environments.
- Vacuum level to 27 -inHg at low feed pressure.
- High system reliability in case of fluctuating or low feed pressure.
- Suitable for handling sealed objects with high pick-up speed.

TECHNICAL DATA

Description	Unit	Value
Feed pressure, max.	psi	101.5
Temperature range	°F	14-176
Weight	oz	0.40
Material		NBR, PA, PP, SS

VACUUM FLOW

Feed pressure	Air consumption	Vacuum flow (scfm) at different vacuum levels (-inHg)									Max vacuum
psi	scfm	0	3	6	9	12	15	18	21	24	-inHg
25	0.61	1.91	0.85	0.47	0.32	0.15	—	—	—	—	14.7
32	0.72	2.33	1.02	0.61	0.42	0.30	0.17	0.04	—	—	19.2
45	0.93	2.97	1.27	0.93	0.57	0.40	0.30	0.21	0.13	0.06	27.0
58	1.12	2.97	1.48	1.10	0.83	0.51	0.25	0.21	0.13	0.04	25.2

EVACUATION TIME

Feed pressure	Air consumption	Evacuation time (s/cf) to reach different vacuum levels (-inHg)								Max vacuum
psi	scfm	3	6	9	12	15	18	21	24	-inHg
25	0.61	4.25	13.0	28.3	56.7	—	—	—	—	14.7
32	0.72	2.83	9.07	21.2	39.7	62.3	82.2	—	—	19.2
45	0.93	2.27	6.52	13.9	28.3	48.2	73.7	110	178	27.0
58	1.12	2.55	6.80	12.7	21.5	39.7	68.0	105	198	25.2

BLOW FLOW

Feed pressure	Air consumption	Blow flow (scfm) at different pressure levels (psi)												Max pressure
psi	scfm	0	3	6	9	10	12	13	15	16	17	19	20	psi
87	1.59	3.96	2.97	2.82	2.37	2.18	2.18	2.18	2.18	2.12	2.01	1.82	1.67	20

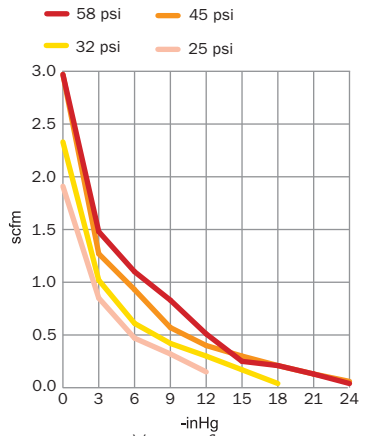

Vacuum flow

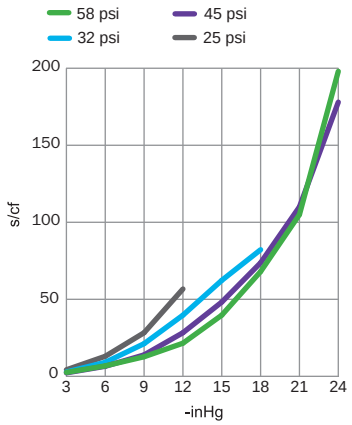

Evacuation time

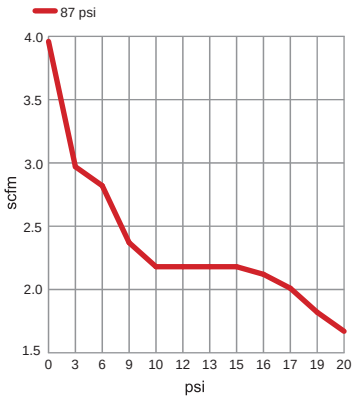

Blow flow

Specifications subject to change without notice.

COAX® CARTRIDGE MINI

ORDERING INFORMATION

	Description	Part No.
E	COAX® cartridge MINI Pi12-3, holding cap with silencer, vacuum filter	01.04.265
F	COAX® cartridge MINI Pi12-3, extra non-return valve, holding cap with silencer, vacuum filter	01.06.676

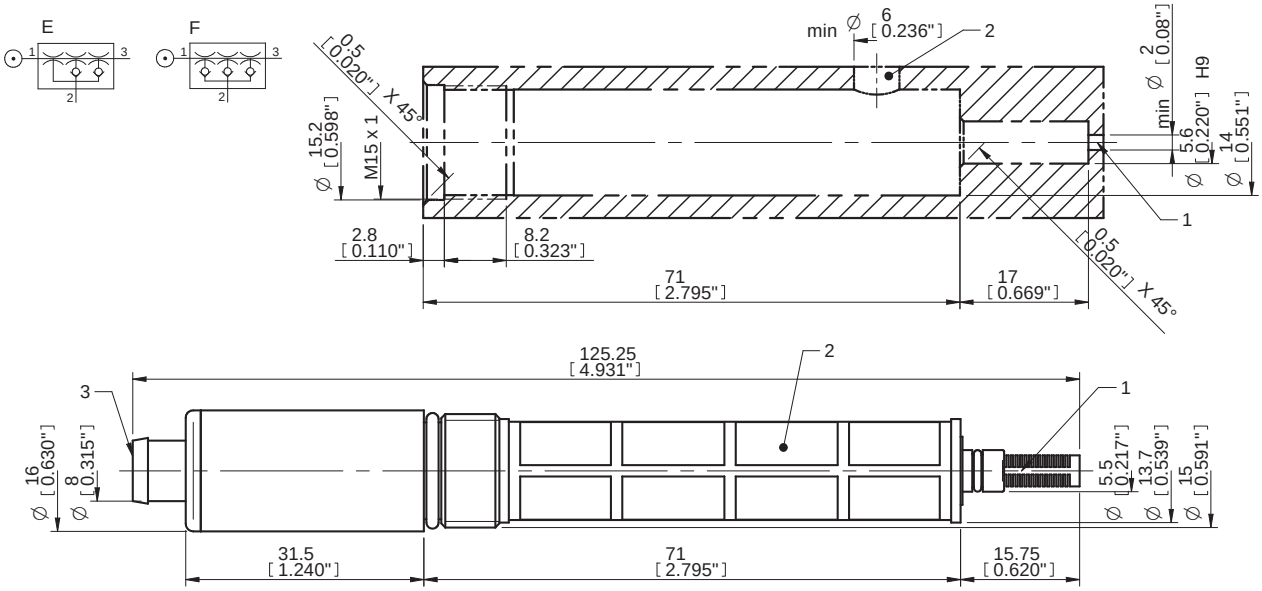

ORDERING INFORMATION, ACCESSORIES

Description	Part No.
Silencer COAX® MINI	01.11.977
Exhaust adapter	01.06.344

COAX® CARTRIDGE MINI

Si08-3 FS

- Three-stage COAX® cartridge - MINI - with extra high initial vacuum flow.
- Includes a flow-through silencer and a built-in vacuum filter for harsh environments.
- Large vacuum flow in relation to energy consumption.
- Good for handling porous materials or if leakage is present. Recommended for high speed applications.

TECHNICAL DATA

Description	Unit	Value
Feed pressure, max.	psi	101.5
Temperature range	°F	14-176
Weight	oz	0.40
Material		NBR, PA, PP, SS

VACUUM FLOW

Feed pressure	Air consumption	Vacuum flow (scfm) at dfferent vacuum levels (-inHg)								Max vacuum
psi	scfm	0	3	6	9	12	15	18	21	-inHg
58	0.66	2.33	1.21	0.76	0.55	0.38	0.19	—	—	18.0
72.5	0.81	2.61	1.38	0.97	0.61	0.49	0.32	0.17	0.02	21.0
87	0.93	2.84	1.55	1.17	0.74	0.49	0.36	0.28	0.17	22.2

EVACUATION TIME

Feed pressure	Air consumption	Evacuation time (s/cf) to reach different vacuum levels (-inHg)							Max vacuum
psi	scfm	3	6	9	12	15	18	21	-inHg
58	0.66	3.40	9.35	18.7	31.2	53.8	—	—	18.0
72.5	0.81	3.12	8.22	15.6	25.5	42.5	65.2	130	21.0
87	0.93	2.83	7.08	13.6	22.7	36.8	56.7	82.2	22.2

BLOW FLOW

Feed pressure	Air consumption	Blow flow (scfm) at different pressure levels (psi)								Max pressure
psi	scfm	0	2	3	4	6	7	9	10	psi
87	0.93	3.77	2.46	2.18	1.82	1.70	1.59	1.40	1.12	10

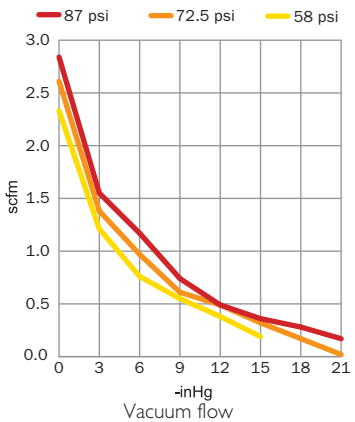

Vacuum flow

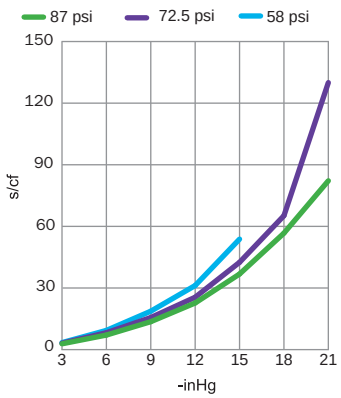

Evacuation time

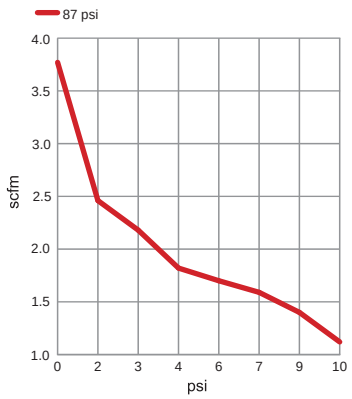

Blow flow

COAX® CARTRIDGE MINI

ORDERING INFORMATION

	Description	Part No.
E	COAX® cartridge MINI Si08-3, holding cap silencer, vacuum filter	01.13.579
F	COAX® cartridge MINI Si08-3, extra non-return valve, holding cap silencer, vacuum filter	01.13.581

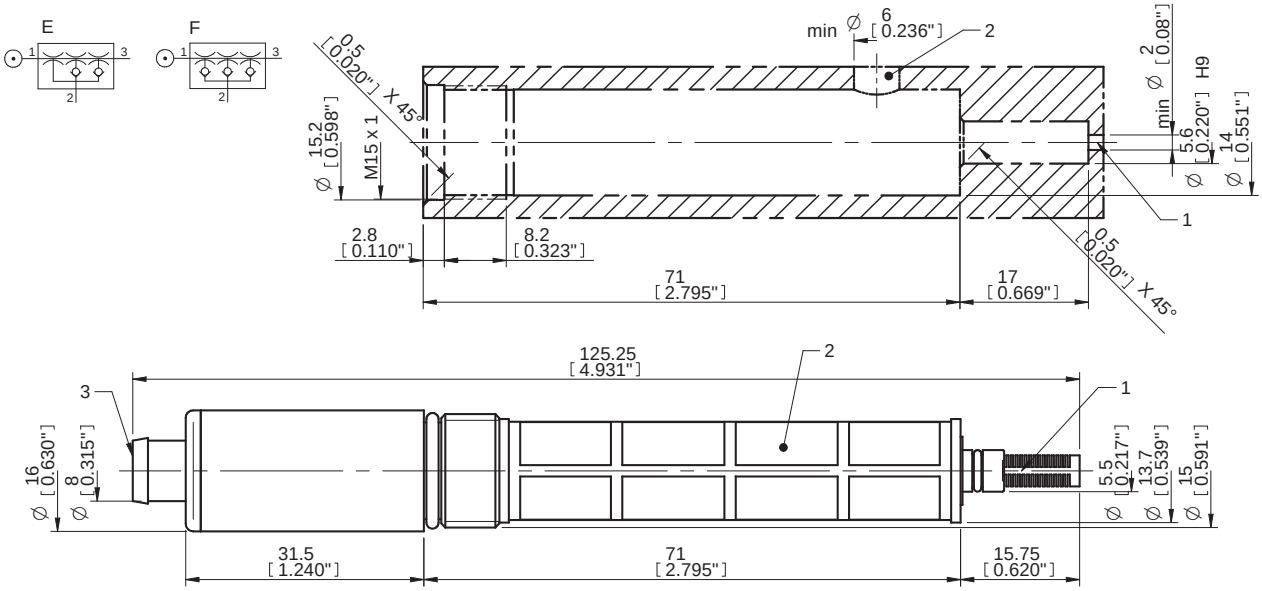

ORDERING INFORMATION, ACCESSORIES

Description	Part No.
Silencer COAX® MINI	01.11.977
Exhaust adapter	01.06.344

COAX® CARTRIDGE MIDI

Pi48-2

- Two-stage COAX® cartridge - MIDI - with small mounting dimension for limited spaces.
- Vacuum level to 27 -inHg at low feed pressure.
- High system reliability in case of fluctuating or low feed pressure.

TECHNICAL DATA

Description	Unit	Value
Feed pressure, max.	psi	101.5
Temperature range	°F	14-176
Weight	oz	0.65-1.93
Material		Al, NBR, PA, SS

VACUUM FLOW

Feed pressure	Air consumption	Vacuum flow (scfm) at different vacuum levels (-inHg)									Max vacuum
psi	scfm	0	3	6	9	12	15	18	21	24	-inHg
25	2.90	5.51	3.60	2.54	1.48	0.85	0.25	—	—	—	16.5
32	3.43	5.72	4.24	3.18	1.91	1.17	0.95	0.55	0.15	—	21.9
44	4.24	5.93	5.30	3.81	2.33	1.17	1.06	0.74	0.53	0.21	27.0
58	5.38	5.93	5.30	4.45	3.18	2.33	1.40	0.76	0.55	0.17	25.8

EVACUATION TIME

Feed pressure	Air consumption	Evacuation time (s/cf) to reach different vacuum levels (-inHg)									Max vacuum
psi	scfm	3	6	9	12	15	18	21	24	27	-inHg
25	2.90	1.13	2.83	5.67	11.3	—	—	—	—	—	16.5
32	3.43	0.99	2.55	5.10	9.07	14.4	22.7	—	—	—	21.9
44	4.24	0.85	1.98	3.68	7.37	13.0	19.8	28.3	45.3	113	27.0
58	5.38	0.85	1.80	3.40	5.38	8.50	17.0	25.5	48.2	127	25.8

BLOW FLOW

Feed pressure	Air consumption	Blow flow (scfm) at different pressure levels (psi)												Max pressure
psi	scfm	0	3	6	9	10	12	13	15	16	17	19	20	psi
87	7.42	13.0	13.0	12.6	10.7	9.51	9.51	9.51	9.51	9.51	9.03	8.48	7.69	20

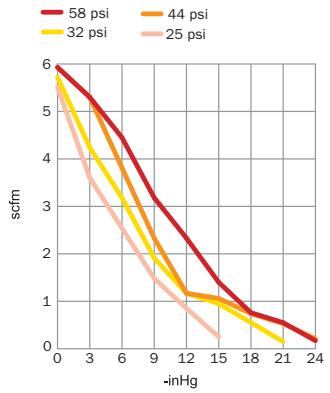

Vacuum flow

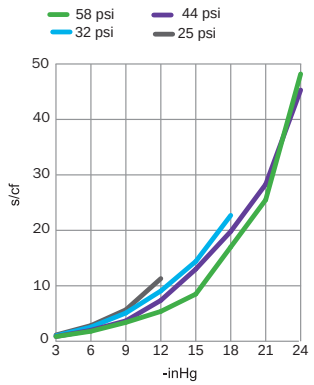

Evacuation time

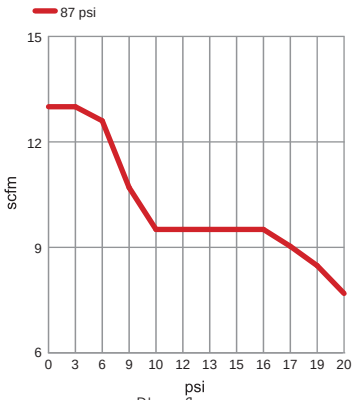

Blow flow

Specifications subject to change without notice.

ORDERING INFORMATION

	Description	Part No.
C	COAX® cartridge MIDI Pi48-2	01.07.125
A	COAX® cartridge MIDI Pi48-2, holding cap	01.07.127
D	COAX® cartridge MIDI Pi48-2, extra non-return valve	01.07.710
B	COAX® cartridge MIDI Pi48-2, holding cap, extra non-return valve	01.07.712

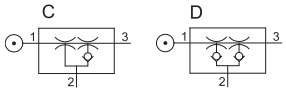

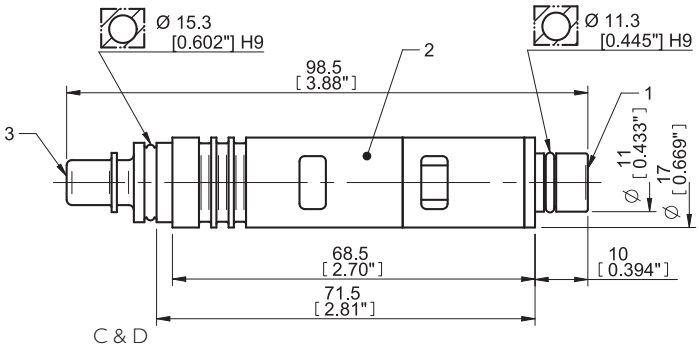

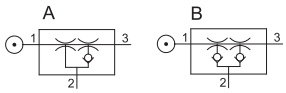

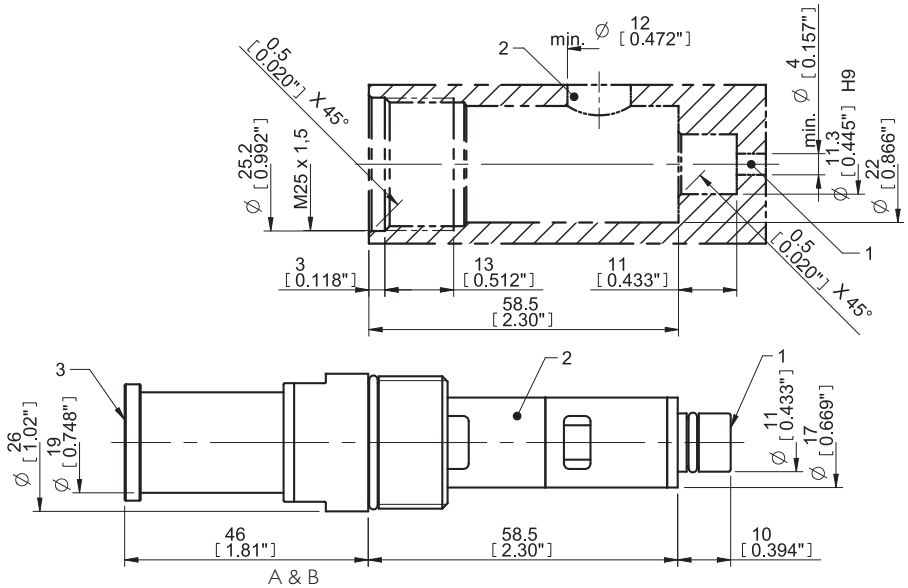

ORDERING INFORMATION, ACCESSORIES

Description	Part No.
Silencer COAX® MIDI	01.11.976

COAX® CARTRIDGE MIDI

Si32-2

- Two-stage COAX® cartridge - MIDI - with small mounting dimension for limited spaces.
- Large vacuum flow in relation to energy consumption.
- Suitable for high-volume evacuation when handling porous materials or if surface leakage is present.

TECHNICAL DATA

Description	Unit	Value
Feed pressure, max.	psi	101.5
Temperature range	°F	14-176
Weight	oz	0.65-1.93
Material		Al, NBR, PA, SS

VACUUM FLOW

Feed pressure	Air consumption	Vacuum flow (scfm) at different vacuum levels (-inHg)								Max vacuum
psi	scfm	0	3	6	9	12	15	18	21	-inHg
58	2.65	6.57	5.51	4.03	2.54	1.70	0.85	0.21	—	18.0
72.5	3.18	6.78	6.14	4.66	2.97	1.80	1.31	0.74	0.38	21.0
87	3.71	6.99	6.36	5.51	3.60	1.91	1.27	1.06	0.74	22.2

EVACUATION TIME

Feed pressure	Air consumption	Evacuation time (s/cf) to reach different vacuum levels (-inHg)							Max vacuum
psi	scfm	3	6	9	12	15	18	21	-inHg
58	2.65	0.040	0.080	0.14	0.24	0.42	1.0	—	18.0
72.5	3.18	0.030	0.070	0.11	0.21	0.35	0.60	1.0	21.0
87	3.71	0.030	0.070	0.10	0.18	0.33	0.53	0.80	22.2

BLOW FLOW

Feed pressure	Air consumption	Blow flow (scfm) at different pressure levels (psi)									Max pressure
psi	scfm	0	2	3	4	6	7	9	10	12	psi
87	3.71	10.7	10.2	9.01	7.65	6.99	6.12	5.62	4.98	4.17	12

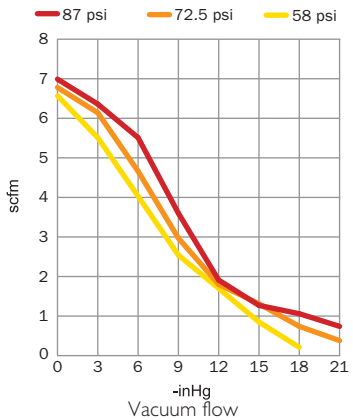

Vacuum flow

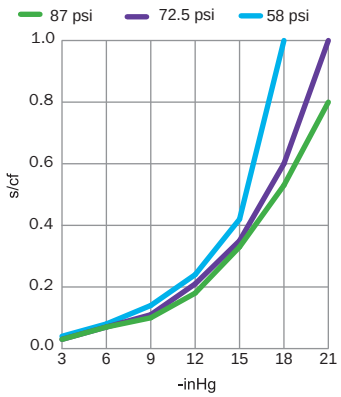

Evacuation time

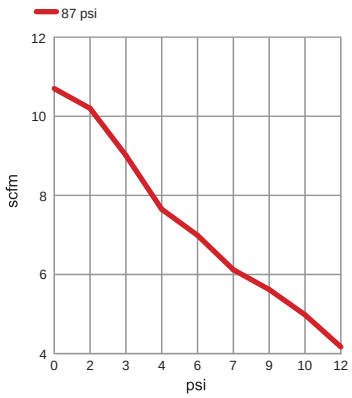

Blow flow

Specifications subject to change without notice.

ORDERING INFORMATION

	Description	Part No.
C	COAX® cartridge MIDI Si32-2	01.07.124
A	COAX® cartridge MIDI Si32-2, holding cap	01.07.126
D	COAX® cartridge MIDI Si32-2, extra non-return valve	01.07.709
B	COAX® cartridge MIDI Si32-2, holding cap, extra non-return valve	01.07.711

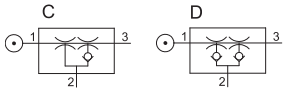

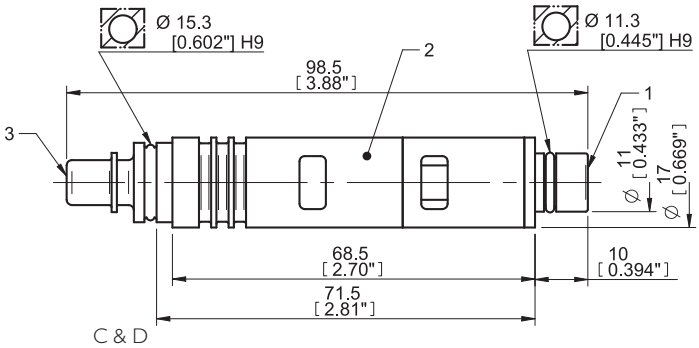

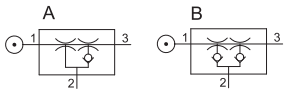

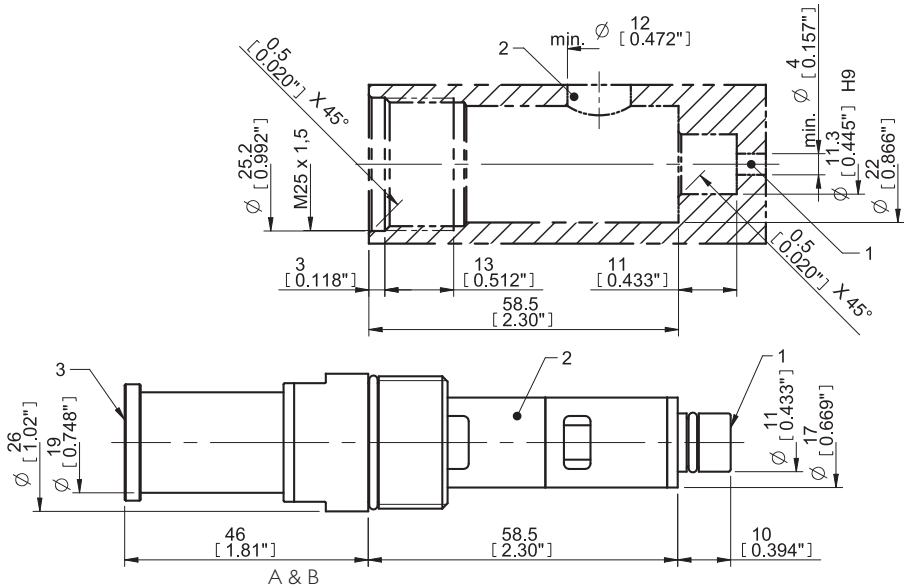

ORDERING INFORMATION, ACCESSORIES

Description	Part No.
Silencer COAX® MIDI	01.11.976

COAX® CARTRIDGE MIDI

Pi48-3

- Three-stage COAX® cartridge - MIDI - with high initial vacuum flow.
- Vacuum level to 27 -inHg at low feed pressure.
- High system reliability in case of fluctuating or low feed pressure.
- Suitable for fast evacuation of large volumes in sealed systems.

TECHNICAL DATA

Description	Unit	Value
Feed pressure, max.	psi	101.5
Temperature range	°F	14-176
Weight	oz	1.07-2.35
Material		Al, NBR, PA, SS

VACUUM FLOW

Feed pressure	Air consumption	Vacuum flow (scfm, at different vacuum levels (-inHg)									Max vacuum
psi	scfm	0	3	6	9	12	15	18	21	24	-inHg
25	2.90	8.48	3.60	2.54	1.48	0.85	0.25	—	—	—	16.5
32	3.43	10.6	4.24	3.18	1.91	1.17	0.95	0.55	0.15	—	21.9
44	4.24	11.9	5.30	3.81	2.33	1.38	1.06	0.74	0.53	0.21	27.0
58	5.38	12.1	5.30	4.45	3.18	2.33	1.40	0.76	0.55	0.17	25.8

EVACUATION TIME

Feed pressure	Air consumption	Evacuation time (s/l) to reach different vacuum levels (-kPa)									Max vacuum
psi	scfm	3	6	9	12	15	18	21	24	27	-inHg
25	2.90	0.85	2.83	5.67	11.3	28.3	—	—	—	—	16.5
32	3.43	0.71	2.27	4.82	8.50	14.2	22.7	48.2	—	—	21.9
44	4.24	0.57	1.70	3.40	7.08	12.7	19.8	28.3	45.3	113	27.0
58	5.38	0.57	1.56	3.12	5.10	8.22	16.7	25.5	48.2	127	25.8

BLOW FLOW

Feed pressure	Air consumption	Blow flow (scfm) at different pressure levels (psi)												Max pressure
psi	scfm	0	3	6	9	10	12	13	15	16	17	19	20	psi
87	7.52	20.1	13.8	12.7	11.2	9.96	9.75	9.75	9.75	9.54	9.11	8.48	7.84	20

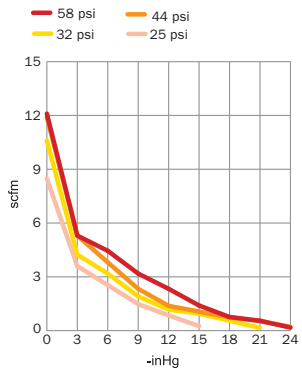

Vacuum flow

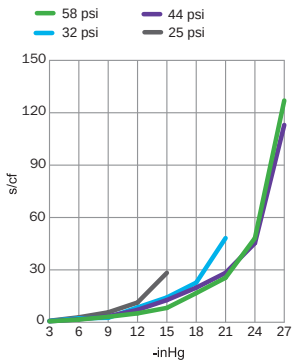

Evacuation time

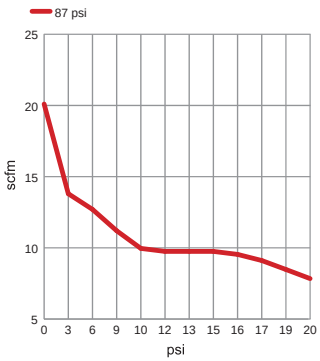

Blow flow

Specifications subject to change without notice.

ORDERING INFORMATION

	Description	Part No.
C	COAX® cartridge MIDI Pi48-3	01.06.639
A	COAX® cartridge MIDI Pi48-3, holding cap	01.07.129
D	COAX® cartridge MIDI Pi48-3, extra non-return valve	01.07.714
B	COAX® cartridge MIDI Pi48-3, holding cap, extra non-return valve	01.07.716

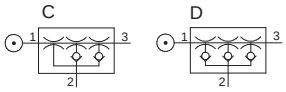

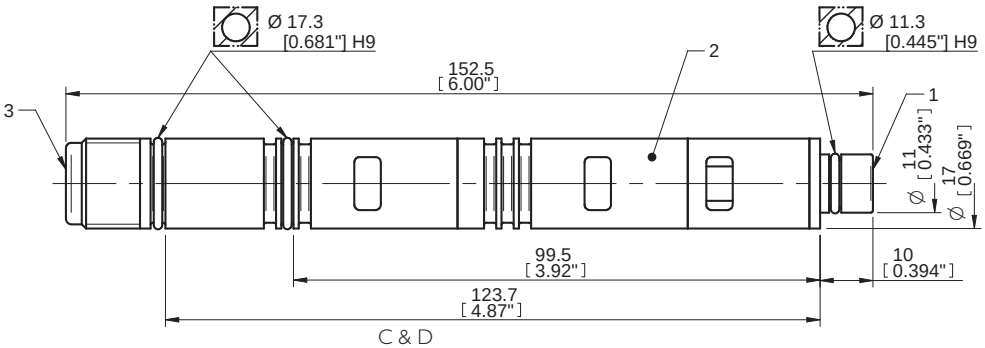

C & D

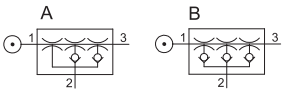

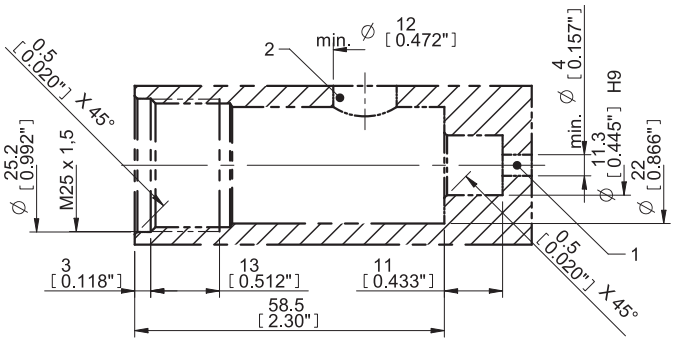

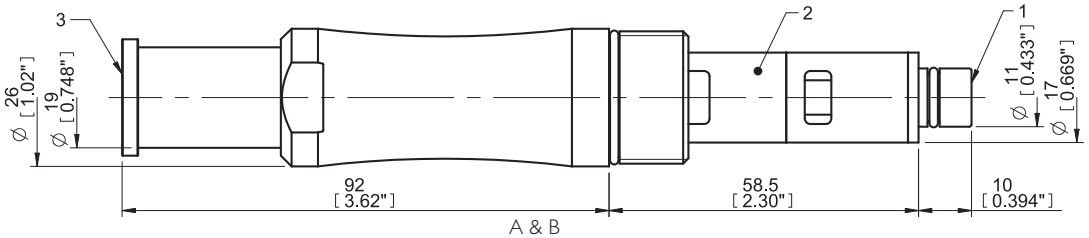

A & B

ORDERING INFORMATION, ACCESSORIES

Description	Part No.
Silencer COAX® MIDI	01.11.976

COAX® CARTRIDGE MIDI

Si32-3

- Three-stage COAX® cartridge - MIDI - with extra high initial vacuum flow.
- Large vacuum flow in relation to energy consumption.
- Suitable for fast evacuation of large volumes when handling porous materials or if surface leakage is present.

TECHNICAL DATA

Description	Unit	Value
Feed pressure, max.	psi	101.5
Temperature range	°F	14-176
Weight	oz	1.04-2.33
Material		Al, NBR, PA, SS

VACUUM FLOW

Feed pressure	Air consumption	Vacuum flow (scfm) at different vacuum levels (-inHg)								Max vacuum
psi	scfm	0	3	6	9	12	15	18	21	-inHg
58	2.65	10.6	6.14	4.03	2.54	1.70	0.85	0.21	—	18.0
72.5	3.18	12.1	6.99	4.66	2.97	1.80	1.31	0.74	0.38	21.0
87	3.71	12.7	7.42	5.51	3.60	1.91	1.27	1.06	0.74	22.2

EVACUATION TIME

Feed pressure	Air consumption	Evacuation time (s/cf) to reach different vacuum levels (-inHg)							Max vacuum
psi	scfm	3	6	9	12	15	18	21	-inHg
58	2.65	0.85	1.98	3.97	6.80	11.9	28.3	—	18.0
72.5	3.18	0.57	1.70	3.12	5.95	9.92	17.0	28.3	21.0
87	3.71	0.57	1.42	2.83	5.10	9.35	15.0	22.7	22.2

BLOW FLOW

Feed pressure	Air consumption	Blow flow (scfm) at different pressure levels (psi)									Max pressure
psi	scfm	0	2	3	4	6	7	9	10	12	psi
87	3.71	16.5	11.4	9.75	8.05	6.99	6.57	5.72	4.87	3.81	12

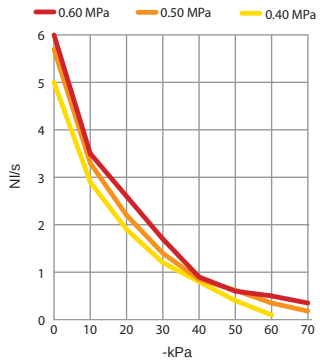

Vacuum flow

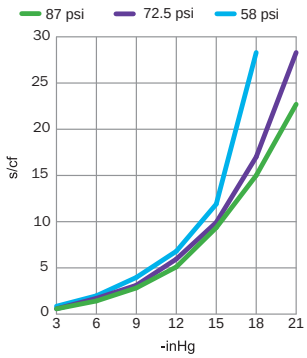

Evacuation time

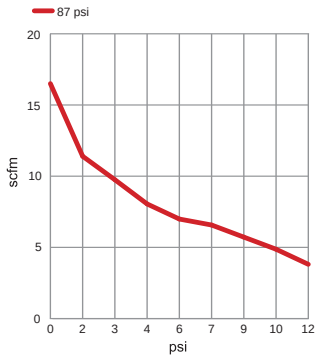

Blow flow

Specifications subject to change without notice.

ORDERING INFORMATION

	Description	Part No.
C	COAX® cartridge MIDI Si32-3	01.07.053
A	COAX® cartridge MIDI Si32-3, holding cap	01.07.128
D	COAX® cartridge MIDI Si32-3, extra non-return valve	01.07.713
B	COAX® cartridge MIDI Si32-3, holding cap, extra non-return valve	01.07.715

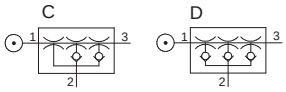

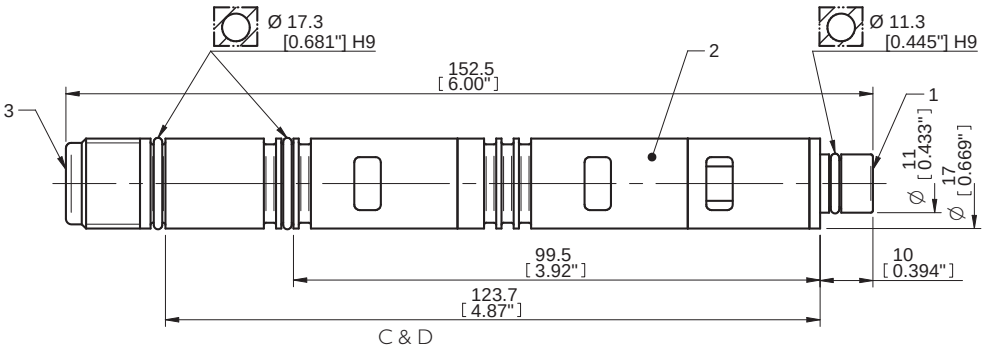

C & D

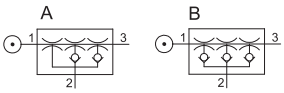

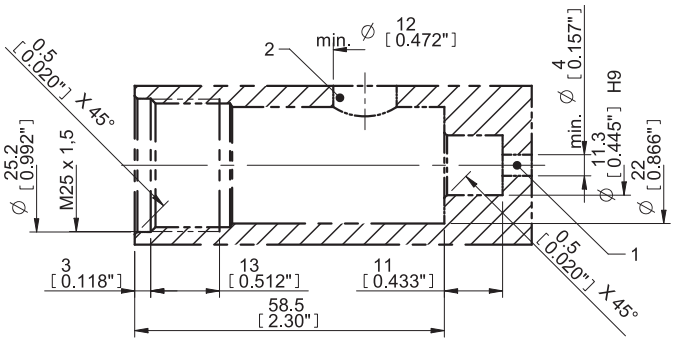

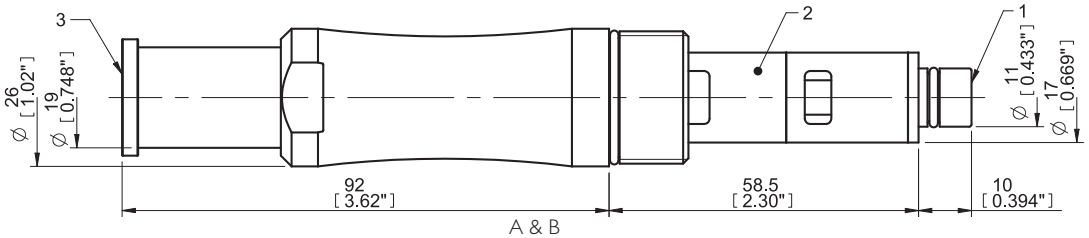

A & B

ORDERING INFORMATION, ACCESSORIES

Description	Part No.
Silencer COAX® MIDI	01.11.976

Pi12-2 PROBE

- Patented COAX® technology
- Multiple functions
- Easy to integrate
- Fast installation
- Inline design

TECHNICAL DATA

Description	Unit	Value
Feed pressure, max.	psi	101.5
Temperature range	°F	14-176
Weight	oz	0.42-0.59
Material		Al, NBR, PA, SS, CuZn, POM

VACUUM FLOW

Feed pressure	Air consumption	Vacuum flow (scfm) at different vacuum levels (-inHg)									Max vacuum
psi	scfm	0	3	6	9	12	15	18	21	24	-inHg
25	0.61	1.21	0.85	0.47	0.32	0.15	—	—	—	—	14.7
32	0.72	1.36	1.02	0.61	0.42	0.30	0.17	0.04	—	—	19.2
45	0.93	1.44	1.27	0.93	0.57	0.40	0.30	0.21	0.13	0.06	27.0
58	1.12	1.40	1.27	1.10	0.83	0.51	0.25	0.21	0.13	0.04	25.2

EVACUATION TIME

Feed pressure	Air consumption	Evacuation time (s/cf) to reach different vacuum levels (-inHg)								Max vacuum
psi	scfm	3	6	9	12	15	18	21	24	-inHg
25	0.61	7.93	15.9	32.0	60.3	—	—	—	—	14.7
32	0.72	5.67	11.9	24.1	42.5	65.2	85.0	—	—	19.2
45	0.93	4.82	9.07	16.4	31.2	51.0	76.5	113	181	27.0
58	1.12	5.10	9.35	15.3	24.1	42.5	70.8	108	201	25.2

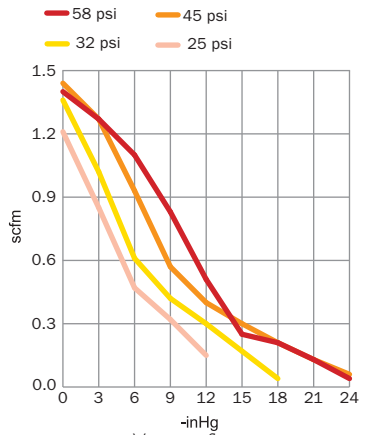

Vacuum flow

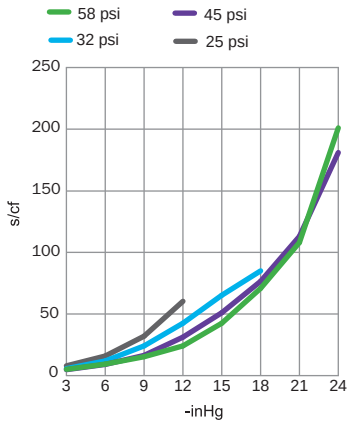

Evacuation time

ORDERING INFORMATION

	Description	Part No.
A	COAX® probe MINI Pi12-2 6 mm	01.14.122
B	COAX® probe MINI Pi12-2 6 mm, extra non-return valve	01.14.123
C	COAX® probe MINI Pi12-2 2x6 mm	01.14.124
D	COAX® probe MINI Pi12-2 2x6 mm, extra non-return valve	01.14.125

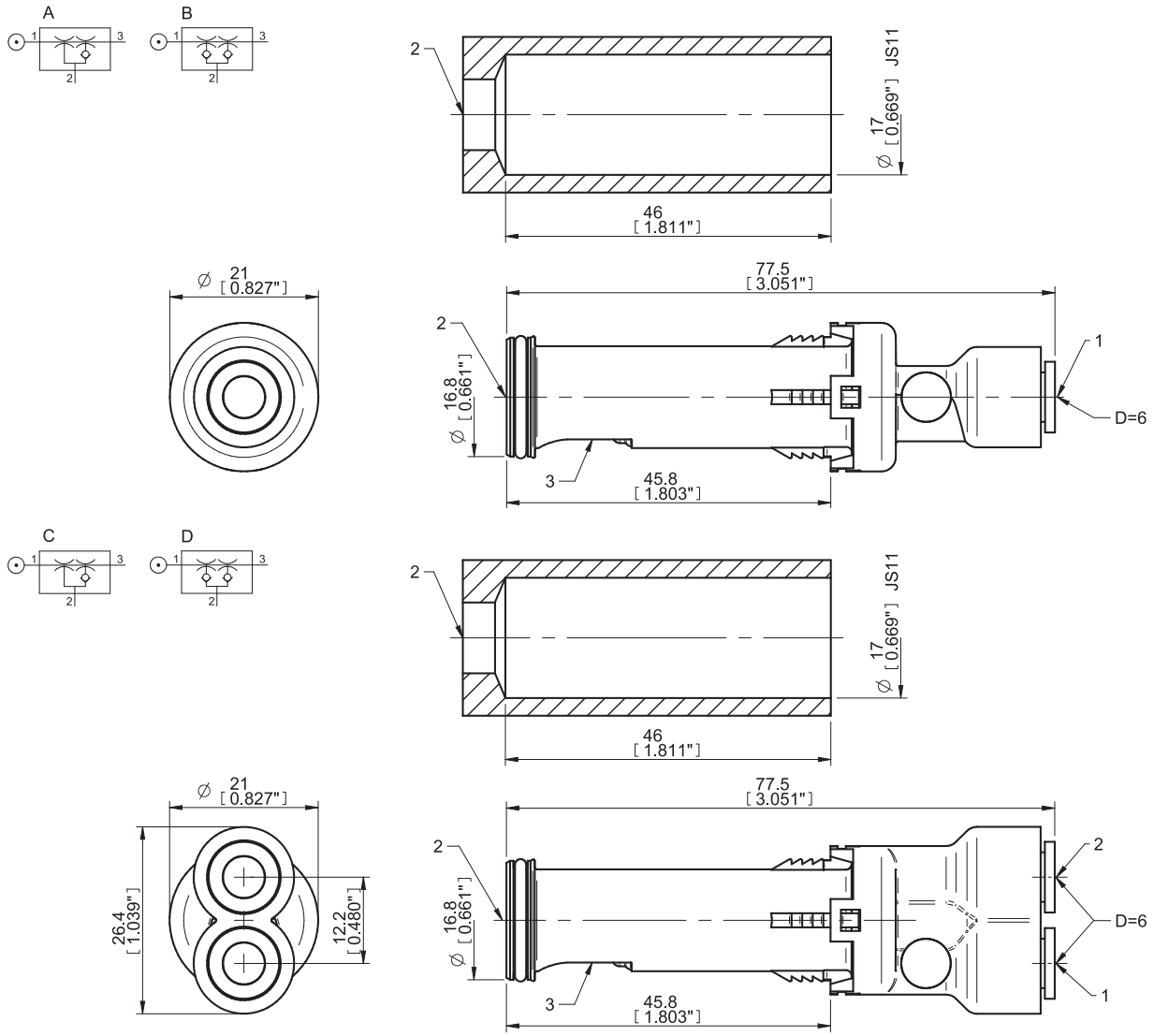

Si08-2 PROBE

- Patented COAX® technology
- Multiple functions
- Easy to integrate
- Fast installation
- Inline design

TECHNICAL DATA

Description	Unit	Value
Feed pressure, max.	psi	101.5
Temperature range	°F	14-176
Weight	oz	0.42-0.59
Material		Al, NBR, PA, SS, CuZn, POM

VACUUM FLOW

Feed pressure	Air consumption	Vacuum flow (scfm) at different vacuum levels (-inHg)								Max vacuum
psi	scfm	0	3	6	9	12	15	18	21	-inHg
58	0.66	1.50	1.12	0.72	0.55	0.38	0.19	0.02	—	18.0
72.5	0.81	1.63	1.29	0.91	0.61	0.49	0.32	0.17	0.02	21.0
87	0.93	1.63	1.42	1.08	0.70	0.49	0.34	0.25	0.17	22.2

EVACUATION TIME

Feed pressure	Air consumption	Evacuation time (s/cf) to reach different vacuum levels (-inHg)							Max vacuum
psi	scfm	3	6	9	12	15	18	21	-inHg
58	0.66	4.53	11.0	20.4	34.0	53.8	110	—	18.0
72.5	0.81	3.97	9.63	17.6	28.3	42.5	68.0	130	21.0
87	0.93	3.97	8.78	15.6	25.5	39.7	59.5	87.8	22.2

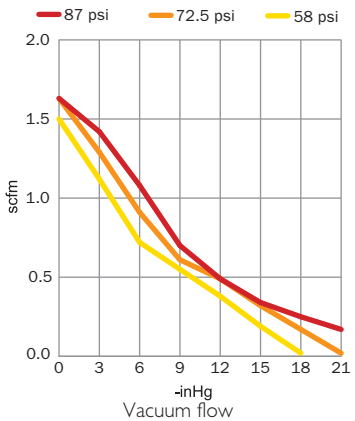

Vacuum flow

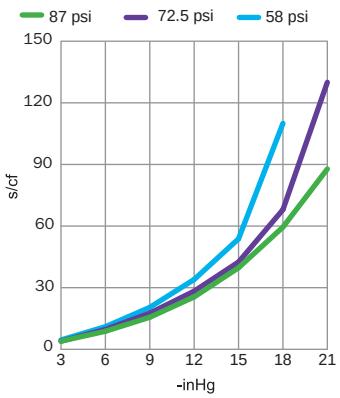

Evacuation time

ORDERING INFORMATION

	Description	Part No.
A	COAX® probe MINI Si08-2 6 mm	01.14.126
B	COAX® probe MINI Si08-2 6 mm, extra non-return valve	01.14.127
C	COAX® probe MINI Si08-2 2x6 mm	01.14.128
D	COAX® probe MINI Si08-2 2x6 mm, extra non-return valve	01.14.129

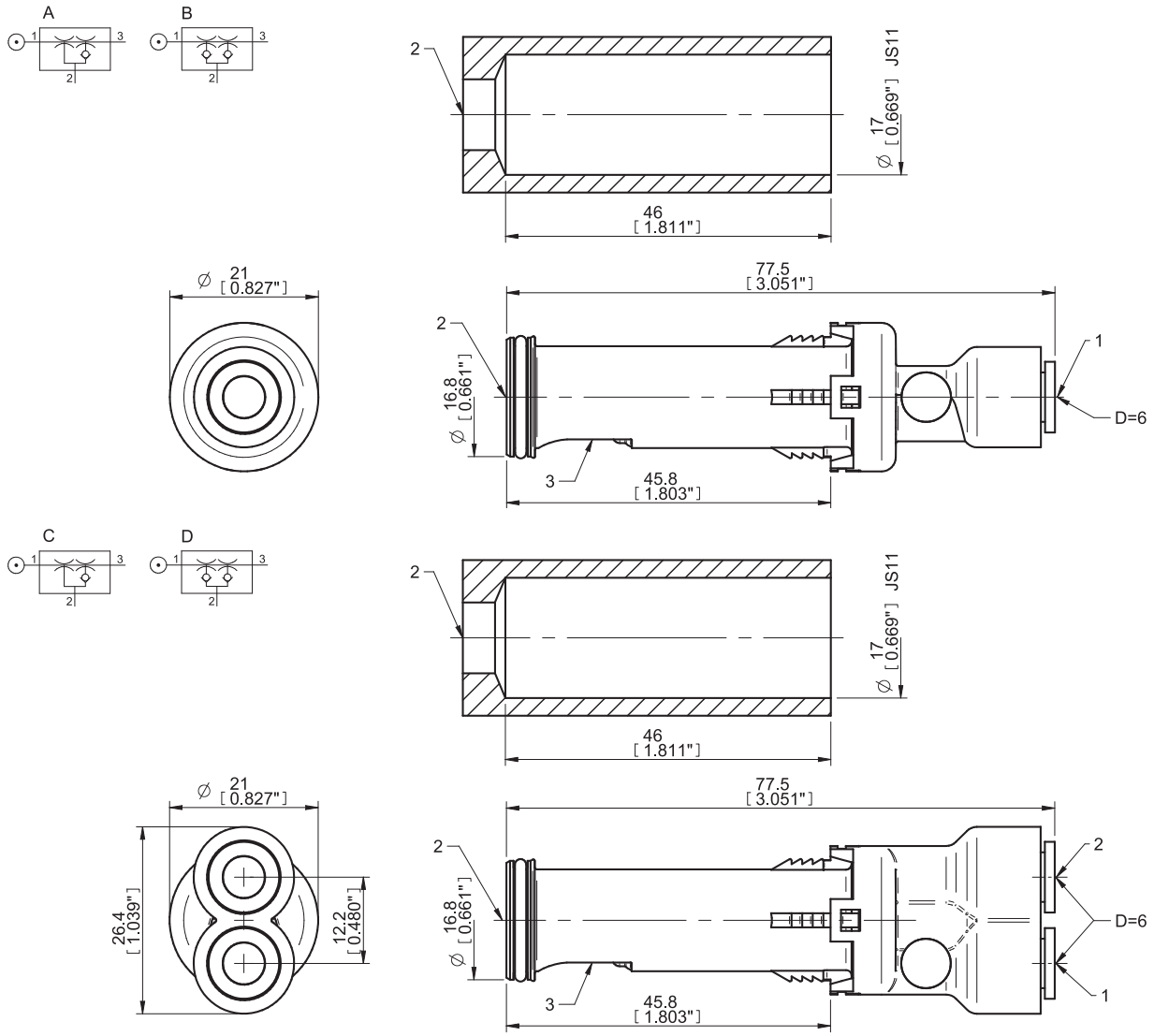

P2010 Bi03-2

- Patented COAX® technology
- Low operating feed pressure
- Low weight
- Miniature size
- Inline design
- Short cycle times
- DIN-rail mounting
- Quick and easy mounting

TECHNICAL DATA

Description	Unit	Value
Feed pressure, optimum	psi	26
Feed pressure, max.	psi	101.5
Noise level	dBA	61–64
Temperature range	°F	14-122
Material		PA, NBR, Al, SS, POM, CuZn

TECHNICAL DATA, SPECIFIC

Description	Unit	Value	
		01.07.996	01.10.348
Weight	oz	0.54	0.63

VACUUM FLOW

Feed pressure	Air consumption	Vacuum flow (scfm) at different vacuum levels (-inHg)								Max vacuum
psi	scfm	0	3	6	9	12	15	18	21	-inHg
16	0.21	0.36	0.21	0.08	0.06	0.03	—	—	—	15.0
26	0.30	0.49	0.32	0.13	0.08	0.07	0.05	0.03	0.01	24.9
32	0.36	0.57	0.40	0.19	0.08	0.05	0.04	0.02	0.01	24.6

EVACUATION TIME

Feed pressure	Air consumption	Evacuation time (s/cf) to reach different vacuum levels (-inHg)								Max vacuum
psi	scfm	3	6	9	12	15	18	21	24	-inHg
16	0.21	19.8	82.2	167	312	793	—	—	—	15.0
26	0.30	14.2	39.7	110	181	283	453	793	1445	24.9
32	0.36	11.3	31.2	93.5	181	312	510	907	1756	24.6

See page 28 for recommended hose dimensions for compressed air, vacuum & exhaust connections.

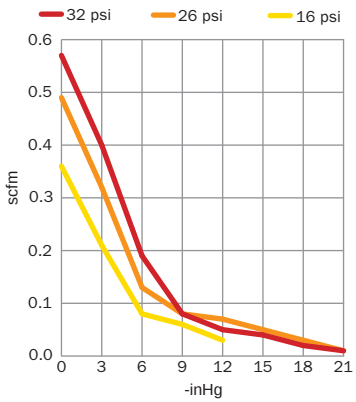

Vacuum flow

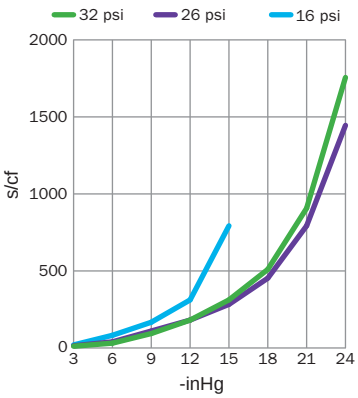

Evacuation time

ORDERING INFORMATION

	Description	Part No.
A	Vacuum pump P2010	01.07.996
B	Vacuum pump P2010, DIN	01.10.348

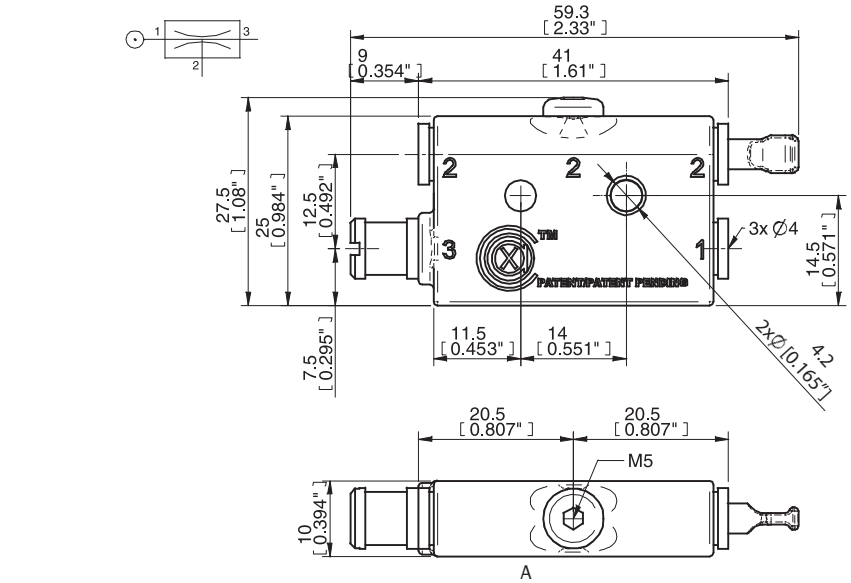

A

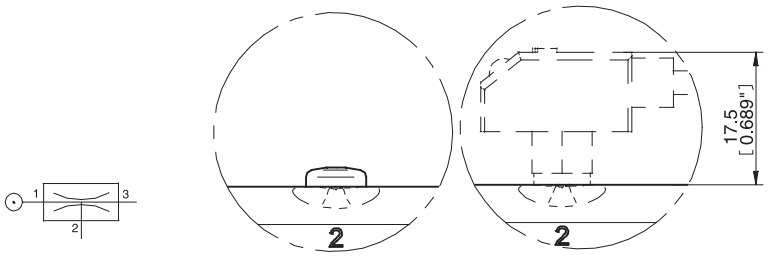

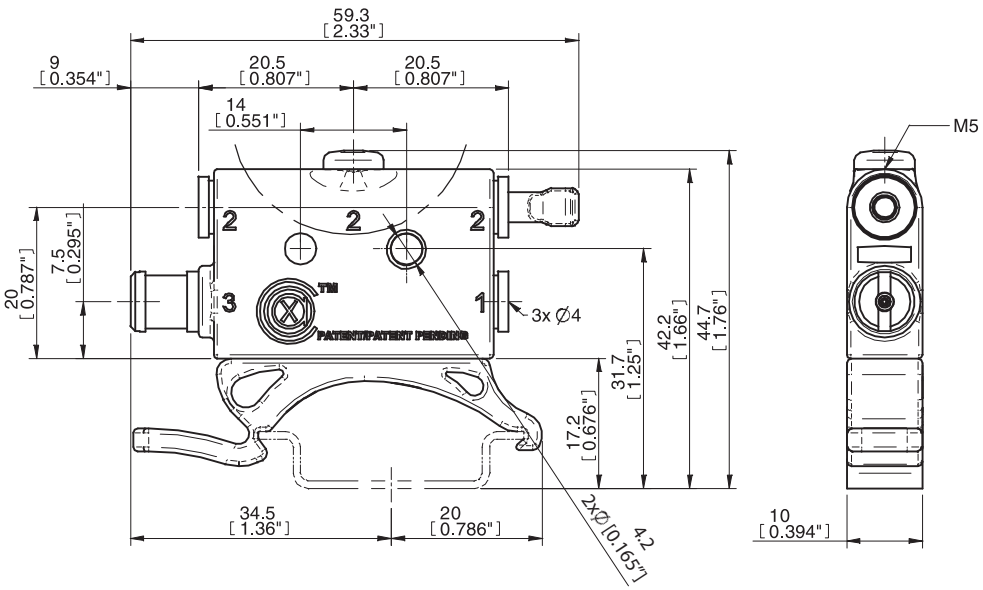

B

ORDERING INFORMATION, ACCESSORIES

Description	Part No.
DIN rail 35 mm P2010	01.10.145

QUICK-RELEASE P2010

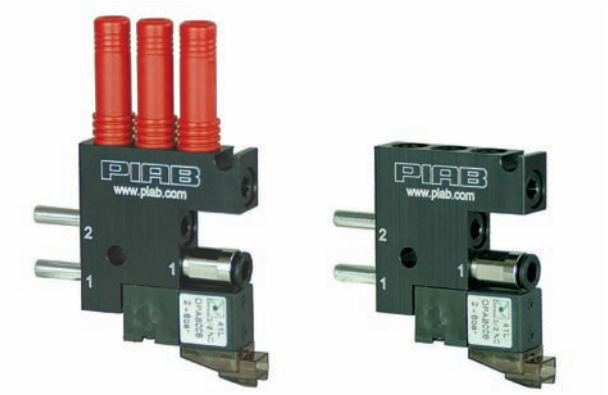

- Flexible, Automatic Quick-Release volume
- Electrical/Pneumatic
- Low weight
- Miniature size
- Inline design
- Short cycle times
- Quick and easy mounting

The user is advised to increase the feed pressure by 7.25 psi to attain correct feed pressure in the pump.

TECHNICAL DATA

Description	Unit	Value
Feed pressure, optimum	psi	26
Feed pressure, max.	psi	101.5
Working temperature	°F	23-122
Material		PA, NBR, Al, SS, POM, CuZn, PE

TECHNICAL DATA, SPECIFIC

Description	Unit	Value			
		01.10.350	01.10.351	01.10.352	01.10.353
Weight	oz	0.95	1.02	1.76	1.83
Volume, Quick-Release	in^3	0.05	0.14	0.05	0.14
Voltage	V DC			24 (-5%+10%)	24 (-5%+10%)
Response time	ms			8–10	8–10
Display				LED	LED
Power	W			1.3	1.3

ORDERING INFORMATION

	Description	Part No.
B, C	Quick-Release 0 pneumatic, P2010	01.10.350
B, D	Quick-Release 3 pneumatic, P2010	01.10.351
A, C	Quick-Release 0 electric, P2010	01.10.352
A, D	Quick-Release 3 electric, P2010	01.10.353

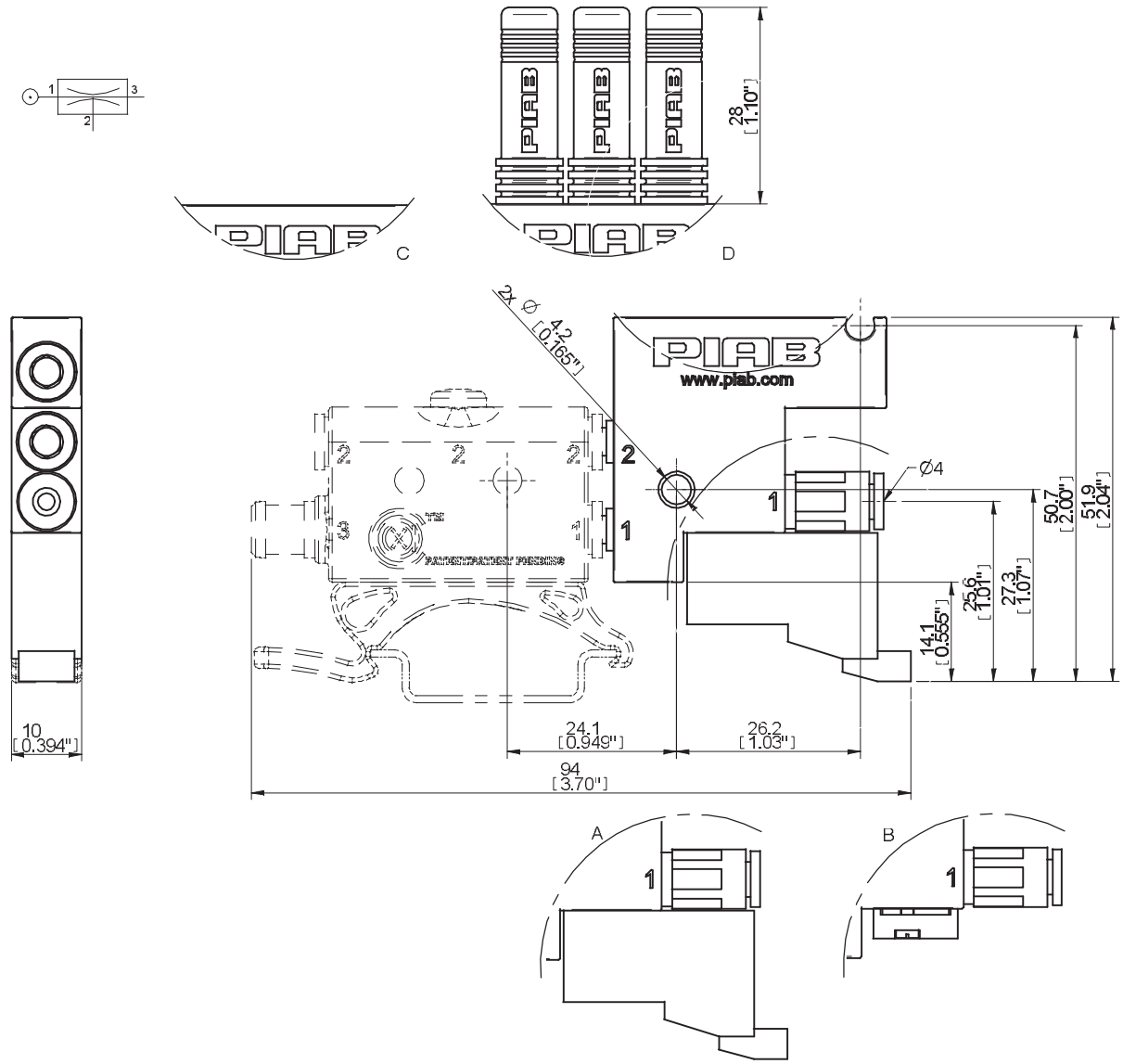

ORDERING INFORMATION, ACCESSORIES

Description	Part No.
Cable to solenoid valve 6.5 ft, 1 pc.	01.10.157
Plug M8x1 complete	01.10.155
Quick-Release tank P2010 cpl.	01.10.156

BLOW-OFF P2010

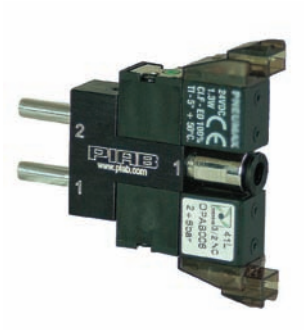

- Control amount and duration of blow-off
- Short cycle times
- Low weight
- Miniature size
- Inline design
- Quick and easy mounting

The user is advised to increase the feed pressure by 7.25 psi to attain correct feed pressure in the pump.

TECHNICAL DATA

Description	Unit	Value
Feed pressure, optimum	psi	26
Feed pressure, max.	psi	101.5
Temperature range	°F	23-122
Weight	oz	2.22
Material		PA, NBR, Al, SS, PE, CuZn
Voltage	V DC	24 (-5%+10%)
Response time	ms	8–10
Display		LED x 2
Power	W	1.3

ORDERING INFORMATION

Description	Part No.
Blow-off unit P2010	01.10.349

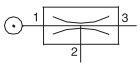

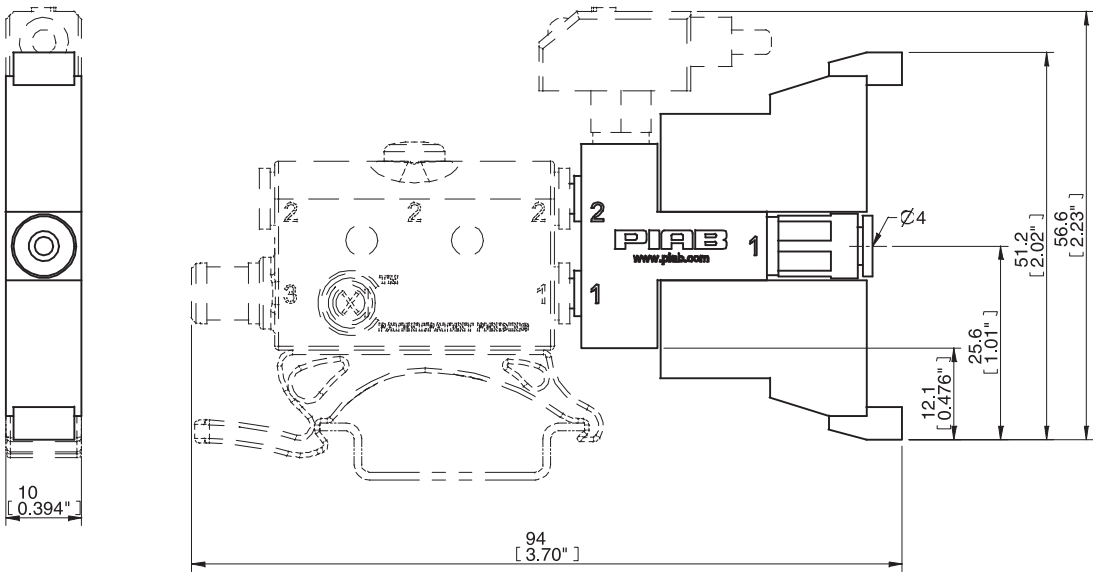

ORDERING INFORMATION, ACCESSORIES

Description	Part No.
Cable Solenoid valve 6.5 ft, 1 pc.	01.10.157

VACUUM SWITCH, ADJUSTABLE FOR P2010

- 1 output NO
- Cable 5.0 ft
- Range from pressure to vacuum

TECHNICAL DATA

Description	Unit	Value
Pressure, max.	psi	87
Vacuum/pressure range	-inHg/psi	-30-89
Material		PC, SS, PSC,CuZn, PA
Temperature range	°F	14-140
Weight	oz	0.21
Connection vacuum		M5
Hysteresis		±2% F.S.
Voltage supply	VDC	10.8–30
Safety classification		IP40
Humidity	%RH	35–85
Response time, approx.	ms	1
Accuracy, at 25°C		±3% F.S.
Current consumption, max	mA	20
High-voltage resistance	V DC	500
Insulation at 500 VDC	MOhm	100
Vibration resistance, 1.5 mm, XYZ, 2 h	Hz	10–55
Display		LED
Current output, max	mA	80

Note: Normally closed, opens at set value from -30 inHg to 89 psi.

ORDERING INFORMATION

Description	Part No.
Vacuum switch PNP M5	01.10.358
Vacuum switch NPN M5	01.10.359

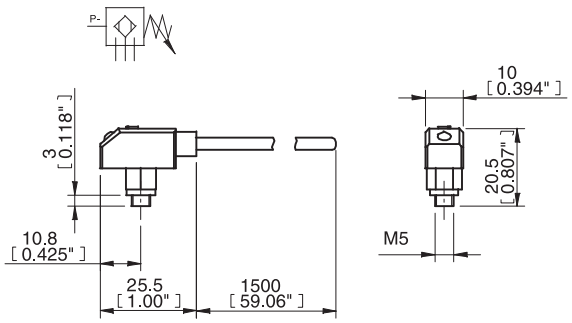

PUSH N' PLAY*

CREATE YOUR OWN P3010!

The P3010 Series enables you to decide for yourself the functions you need. The performance can therefore be upgraded or modified in pace with your changing needs.

The **double connection module** allows you to connect up to four P3010 units (two double stacks) for increased speed. The manifold provides a single connection for compressed air and vacuum as well as two additional vacuum connections for more control functions.

Connection modules are available in several versions, with 3 or 6 connections.

The **Quick-release module** speeds up the release of a part or restoring the system to atmospheric pressure. For higher capacity, an extra tank that offers additional volume can be fitted to the quick release module.

Various **vacuum switches** are available for more reliable operation and accurate control of the process - miniaturized design, analog and static outputs and an LED display are some of the standard alternatives.

Pump speed can be doubled by adding an **extra pump module.**

Pump module

Solenoid valve for controlling the pump and saving energy.

The **mounting rail** is available in several versions. Up to four pumps can be docked to a single rail.

Common feed manifold provides a single air connection when using mutiple pump modules.

*) Most accessories have "push-in" connections making for easy assembly.

EXPLANATION OF P3010 SERIES VACUUM PUMP PART NUMBER

1. Pump Module	Part Number for Individual Module	Code for Complete P3010 Series Pump
Pi12-3 with push-in 6mm air inlet	01.04.656	AA
Pi12-3 with NPSF 1/8" air inlet	01.04.657	AB
2x Pi12-3 with push-in 6mm air inlet	01.04.667	AC
2x Pi12-3 with NPSF 1/8" air inlet	01.04.668	AD
Pi12-3 with push-in 6mm air inlet/non-return valve	01.06.183	BA
Pi12-3 with NPSF 1/8" air inlet/non-return valve	01.06.677	BB
2x Pi12-3 with push-in 6mm air inlet/non-return valve	01.06.213	BC

2. Function Module	Part Number for Individual Module	Code for Complete P3010 Series Pump
Connection module, vacuum 6xNPSF 1/8"	01.04.270	01
Connection module, vacuum 3xNPSF 1/8"	01.04.269	02
Connection module, conn G 3/8" or push-in 12 mm and 2 x 1/8" NPSF	01.06.169	03*
Quick-release module, vacuum inlet push-in 10mm + 6mm	01.04.351	04
Quick-release module, vacuum inlet push-in 8mm + 6mm & quick-release tank 30 cm3	01.04.669	05
Quick-release module, vacuum inlet push-in 8mm + 6mm & quick-release tank 60 cm3	01.04.670	06
Quick-release module, vacuum inlet push-in 10mm + 6mm & quick-release tank 30 cm3	01.04.671	07
Quick-release module, vacuum inlet push-in 10mm + 6mm & quick-release tank 60 cm3	01.04.672	08
Quick-release module, vacuum inlet NPSF 1/4"+ push-in 6mm	01.06.288	09
Quick-release module, vacuum inlet NPSF 1/4"+ push-in 6mm & quick-release tank 30 cm3	01.06.341	10
Quick-release module, vacuum inlet NPSF 1/4"+ push-in 6mm & quick-release tank 60 cm3	01.06.342	11
Quick-release module, vacuum inlet push-in 8mm + 6mm	01.04.271	12

** When ordering this function module, you need to order 2x of the Pump Module.*

3. Valve Module	Part Number for Individual Module	Code for Complete P3010 Series Pump
None		XX
Solenoid DS23, 3-way with 6mm stem includes DIN connector and push-in 6mm fitting 24V DC	01.04.274	AA
Vacustat 6mm stem and push-in 6mm fitting	01.04.701	AC

4. Vacuum Switch Module	Part Number for Individual Module	Code for Complete P3010 Series Pump
None		00
PNP NO adj. electronic with 6mm push-in fitting MM8	01.07.729	01
NPN NO adj. electronic with 6mm push-in fitting MM8	01.07.730	02
PNP NO adj. electronic with 6mm push-in fitting LM8	01.07.731	05
PNP NO adj. electronic/LED with 6mm push-in fitting DM8	01.07.732	09
NPN NO adj. electronic/LED with 6mm push-in fitting DM8	01.07.733	10
Inductive universal with 6mm push-in fitting	01.04.350	11
VS4015 PNP/NPN NO/NC preset at 9 -inHg with 6mm push-in fitting	01.10.245	18
VS4015 PNP/NPN NO/NC preset at 15 -inHg with 6mm push-in fitting	01.10.246	19
VS4015 PNP/NPN NO/NC preset at 21 -inHg with 6mm push-in fitting	01.10.247	20
VS4016 PNP/NPN NO/NC preset at 9 -inHg with G1/8" thread	01.10.248	21
VS4016 PNP/NPN NO/NC preset at 15 -inHg with G1/8" thread	01.10.249	22
VS4016 PNP/NPN NO/NC preset at 21 -inHg with G1/8" thread	01.10.250	23

For operation, every P3010 Series Vacuum Pump must consist of a pump module and a function module.

P3010 Pi12-3X2 WITH ENERGY-SAVING SYSTEM

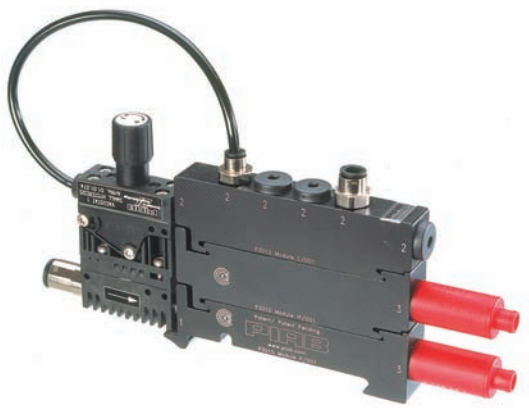

- Patented COAX® technology
- Low operating feed pressure
- Fast cycle times
- Inline design
- Modular functions available

TECHNICAL DATA

Description	Unit	Value
Feed pressure, optimum	psi	45
Feed pressure, max.	psi	101.5
Noise level	dBA	66–68
Temperature range	°F	14-122
Weight	oz	10.6
Material		PP, PA, NBR, Al, SS
Hysteresis	-inHg	<2.07
Lifespan	cycles	>10,000,000

VACUUM FLOW

Feed pressure	Air consumption	Vacuum flow (scfm) at different vacuum levels (-inHg)										Max vacuum
psi	scfm	0	3	6	9	12	15	18	21	24	27	-inHg
87	3.39	6.78	4.24	2.12	1.74	1.53	1.19	0.72	0.21	0.04	–	24.9
45	1.99	5.93	2.54	1.86	1.14	0.81	0.59	0.42	0.25	0.13	–	27.0
25	1.27	3.81	1.70	0.93	0.64	0.30	–	–	–	–	–	14.7

EVACUATION TIME

Feed pressure	Air consumption	Evacuation time (s/cf) to reach different vacuum levels (-inHg)									Max vacuum
psi	scfm	3	6	9	12	15	18	21	24	27	-inHg
87	3.39	0.85	2.41	5.38	9.35	14.2	19.8	34.0	127	–	24.9
45	1.99	1.13	3.40	7.08	14.2	24.1	36.8	56.7	90.7	-	27.0
25	1.27	2.12	6.52	14.2	28.3	–	–	–	–	–	14.7

See page 28 for recommended hose dimensions for compressed air, vacuum & exhaust connections.

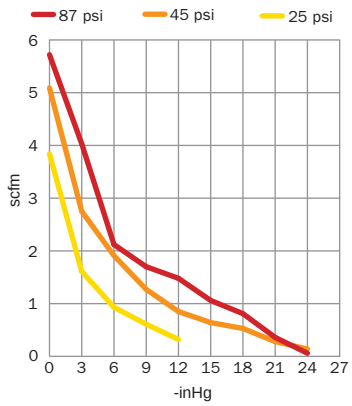

Vacuum flow

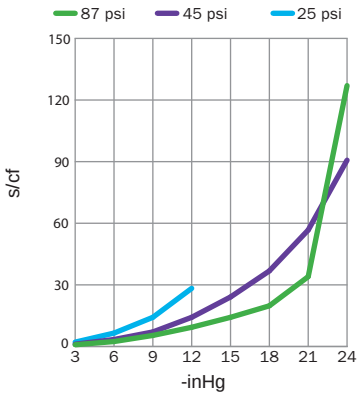

Evacuation time

ORDERING INFORMATION

Description	Part No.
Vacuum pump P3010 Pi12-3x2, conn. 4x1/8" NPSF, ES	P3010.AC.01.AC.00

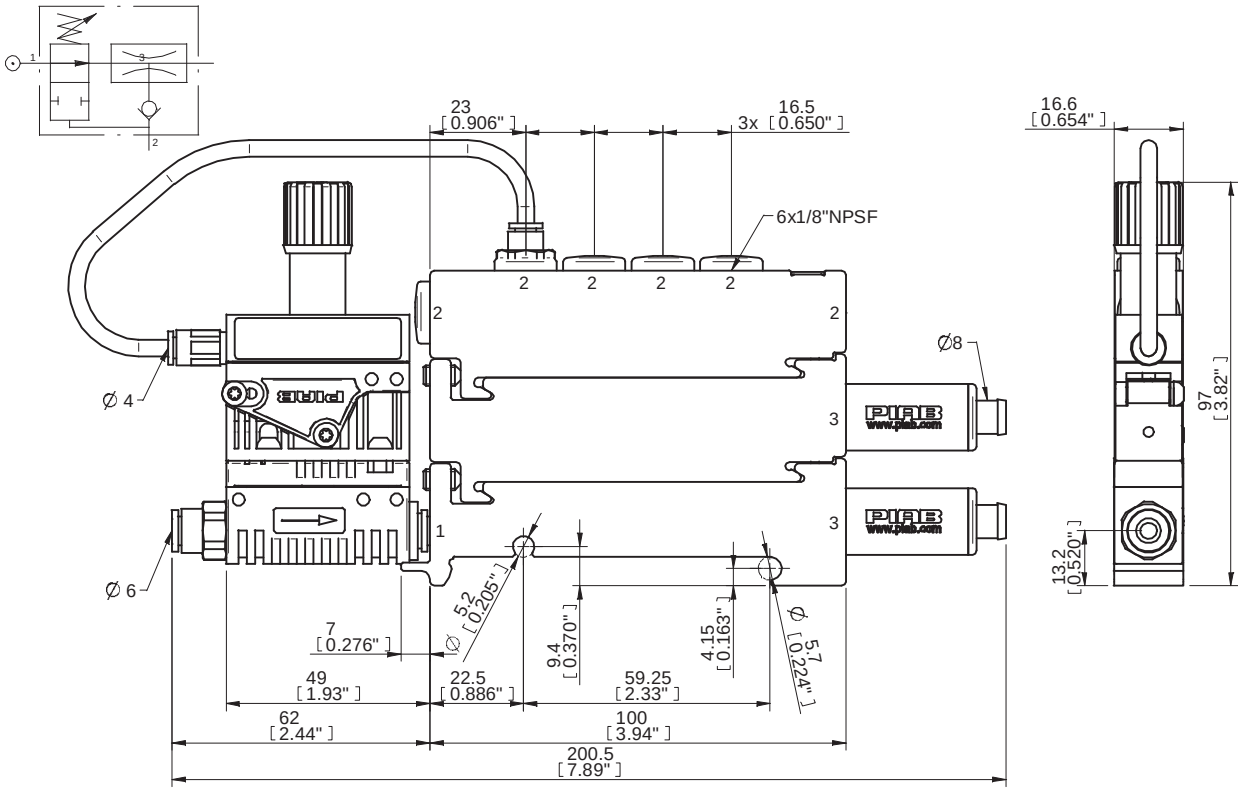

ORDERING INFORMATION, ACCESSORIES

Description	Part No.
Sealing kit P3010, NBR	01.04.201

The sealing kit includes flap valves, compressed air filter and vacuum filter.

P3010 Pi12-3X1 PUMP MODULES

- Patented COAX® technology
- Low operating feed pressure
- Fast cycle times
- Inline design
- Modular functions available

TECHNICAL DATA

Description	Unit	Value
Feed pressure, optimum	psi	45
Feed pressure, max.	psi	101.5
Noise level	dBA	66–68
Temperature range	°F	14-122
Material		PP, PA, Al, SS, NBR

TECHNICAL DATA, SPECIFIC

Description	Unit	Value			
		01.04.657	01.04.656	01.06.183	01.04.658
Weight	oz	2.61	2.22	2.22	2.75

VACUUM FLOW

Feed pressure	Air consumption	Vacuum flow (scfm) at different vacuum levels (-inHg)										Max vacuum
psi	scfm	0	3	6	9	12	15	18	21	24	27	-inHg
87	1.67	3.39	2.12	1.06	0.87	0.76	0.59	0.36	0.11	0.02	–	24.9
45	1.00	2.97	1.27	0.93	0.57	0.40	0.30	0.21	0.13	0.06	–	27.0
25	0.64	1.91	0.85	0.47	0.32	0.15	–	–	–	–	–	14.7

EVACUATION TIME

Feed pressure	Air consumption	Evacuation time (s/cf) to reach different vacuum levels (-inHg)									Max vacuum
psi	scfm	3	6	9	12	15	18	21	24	24	-inHg
87	1.67	1.70	4.82	10.5	18.4	28.3	39.7	68.0	255	–	24.9
45	1.00	2.27	6.52	13.9	28.3	48.2	73.7	110	178	–	27.0
25	0.64	4.25	13.0	28.3	56.7	–	–	–	–	–	14.7

See page 28 for recommended hose dimensions for compressed air, vacuum & exhaust connections.

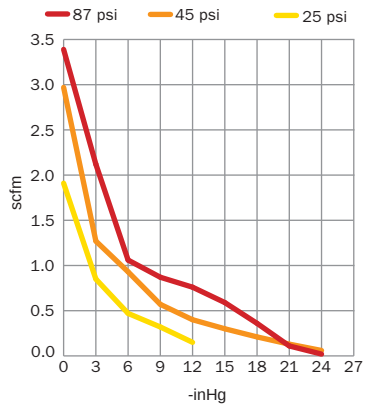

Vacuum flow

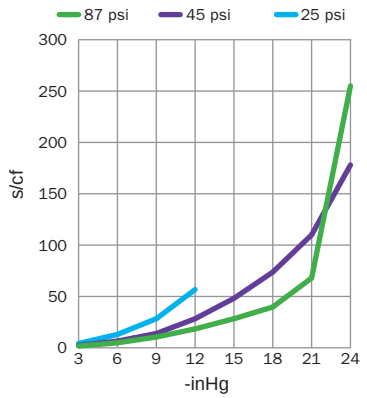

Evacuation time

ORDERING INFORMATION

	Description	Part No.	Code No.
A	Vacuum pump module P3010 Pi12-3, conn. compressed air 1/8" NPSF	01.04.657	AB
A	Vacuum pump module P3010 Pi12-3, conn. Compressed air 1/8"NPSF, non-return valve	01.06.677	BB
B	Vacuum pump module P3010 Pi12-3, conn. compressed air push-in Ø6 mm	01.04.656	AA
B	Vacuum pump module P3010 Pi12-3, conn. compressed air push-in Ø6 mm, non-return valve	01.06.183	BA
C	Vacuum pump module P3010 Pi12-3, extra	01.04.658	-
C	Vacuum pump module P3010 Pi12-3, extra, non-return valve	01.06.210	

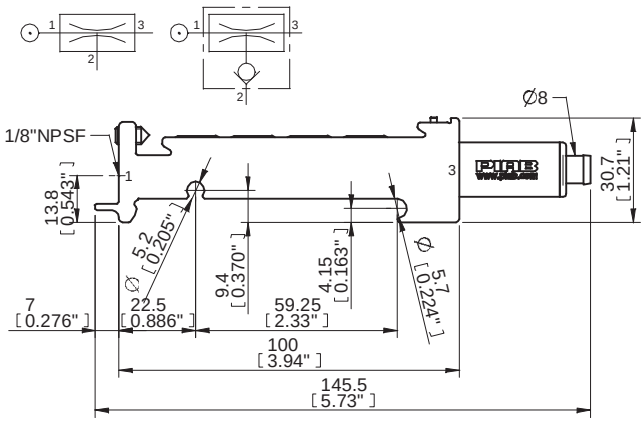

A

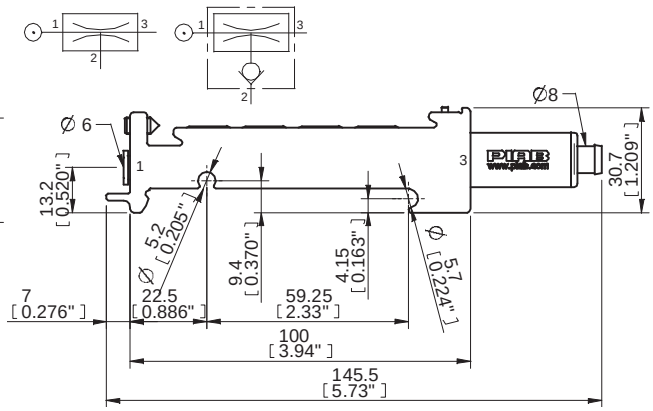

B

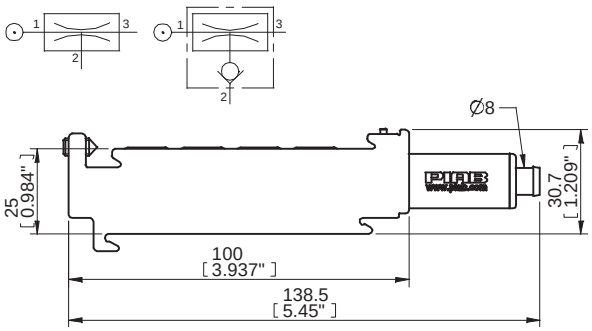

C

ORDERING INFORMATION, ACCESSORIES

Description	Part No.
Sealing kit P3010, NBR	01.04.201

The sealing kit includes flap valves, compressed air filter and vacuum filter.

P3010 Pi12-3X2 PUMP MODULES

- Patented COAX® technology
- Low operating feed pressure
- Fast cycle times
- Inline design
- Modular functions available

TECHNICAL DATA

Description	Unit	Value
Feed pressure, optimum	psi	45
Feed pressure, max.	psi	101.5
Air Consumption	scfm	1.27-3.39
Noise level	dBA	66–68
Temperature range	°F	14-122
Weight	oz	4.80
Material		PA, NBR, Al, SS

VACUUM FLOW

Feed pressure	Air consumption	Vacuum flow (scfm) at different vacuum levels (-inHg)										Max vacuum
psi	scfm	0	3	6	9	12	15	18	21	24	27	-inHg
87	3.39	6.78	4.24	2.12	1.74	1.53	1.19	0.72	0.21	0.04	–	24.9
45	1.99	5.93	2.54	1.86	1.14	0.81	0.59	0.42	0.25	0.13	–	27.0
25	1.27	3.81	1.70	0.93	0.64	0.30	–	–	–	–	–	14.7

EVACUATION TIME

Feed pressure	Air consumption	Evacuation time (s/cf) to reach different vacuum levels (-inHg)									Max vacuum
psi	scfm	3	6	9	12	15	18	21	24	27	-inHg
87	3.39	0.85	2.41	5.38	9.35	14.2	19.8	34.0	127	–	24.9
45	1.99	1.13	3.40	7.08	14.2	24.1	36.8	56.7	90.7	-	27.0
25	1.27	2.12	6.52	14.2	28.3	–	–	–	–	–	14.7

See page 28 for recommended hose dimensions for compressed air, vacuum & exhaust connections.

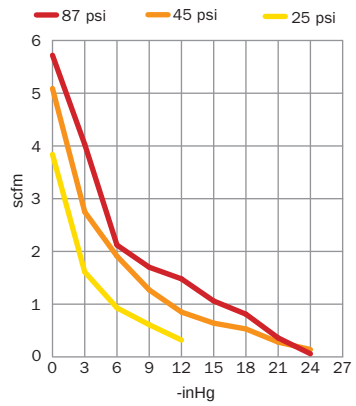

Vacuum flow

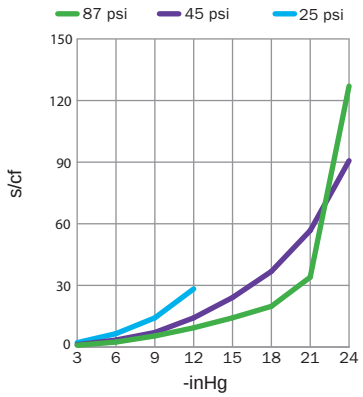

Evacuation time

ORDERING INFORMATION

	Description	Part No.	Code No.
A	Vacuum pump module P3010 Pi12-3x2, conn. compressed air push-in Ø6 mm	01.04.667	AC
B	Vacuum pump module P3010 Pi12-3x2, conn. compressed air 1/8" NPSF	01.04.668	AD

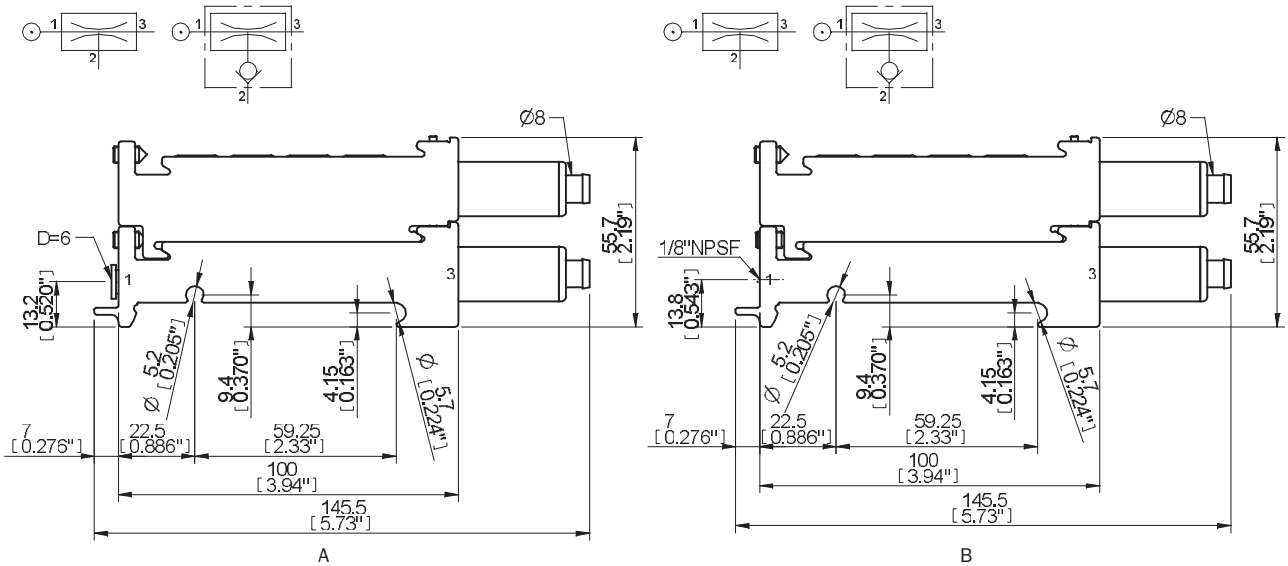

ORDERING INFORMATION, ACCESSORIES

Description	Part No.
Sealing kit P3010, NBR	01.04.201

The sealing kit includes flap valves, compressed air filter and vacuum filter.

P3010 QUICK-RELEASE MODULES

- Patented COAX® technology
- Low operating feed pressure
- Fast cycle times
- Inline design
- Modular functions available

TECHNICAL DATA

Description	Unit	Value
Feed pressure, max.	psi	101.5
Temperature range	°F	14-122
Material		Al, SS,PPS, NBR, PA

TECHNICAL DATA, SPECIFIC

Description	Unit	Value		
		01.04.271/01.04.351/01.06.288	01.04.272	01.04.273
Quick-release volume	in^3	0.18	1.83	3.66
Weight	oz	4.27	2.54	4.16

ORDERING INFORMATION

	Description	Part No.	Code No.
A	Quick-Release module P3010, conn. push-in 10 and 6 mm	01.04.351	04
A	Quick-Release module P3010, vacuum connections push-in 8 and 6 mm	01.04.271	12
B	Quick-Release module P3010, conn. 1/4"NPSF and 6 mm	01.06.288	09
C	Quick-Release tank module P3010, 30 cm^3	01.04.272	-
D	Quick-Release tank module P3010, 60 cm^3	01.04.273	-
E	Quick-Release module P3010, conn. push-in 8 and 6 mm & Quick-Release tank module P3010, 30 cm^3	01.04.669	05
F	Quick-Release module P3010, conn. push-in 8 and 6 mm & Quick-Release tank module P3010, 60 cm^3	01.04.670	06
E	Quick-Release module P3010, conn. push-in 10 and 6 mm & Quick-Release tank module P3010, 30 cm^3	01.04.671	07
F	Quick-Release module P3010, conn. push-in 10 and 6 mm & Quick-Release tank module P3010, 60 cm^3	01.04.672	08
G	Quick-Release module P3010, conn. 1/4"NPSF and 6 mm & Quick-Release tank module P3010, 30 cm^3	01.06.341	10
H	Quick-Release module P3010, conn. 1/4"NPSF and 6 mm & Quick-Release tank module P3010, 60 cm^3	01.06.342	11

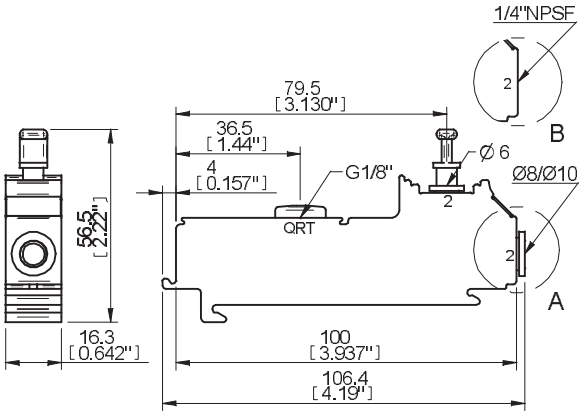
1/4"NPSF
79.5
[3.130"]
36.5
[1.44"]
4
[0.157"]
G1/8"
Ø 6
Ø8/Ø10
QRT
56.5
[2.22"]
16.3
[0.642"]
100
[3.937"]
106.4
[4.19"]
B
A

n

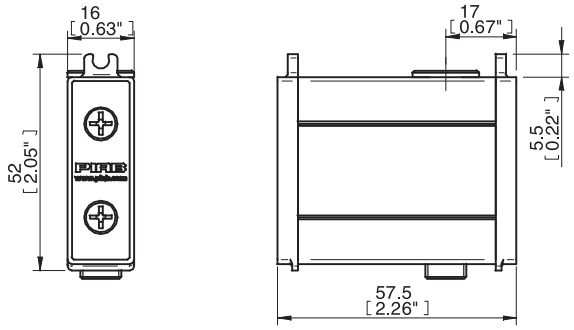
16
[0.63"]
52
[2.05"]
17
[0.67"]
5.5
[0.22"]
57.5
[2.26"]

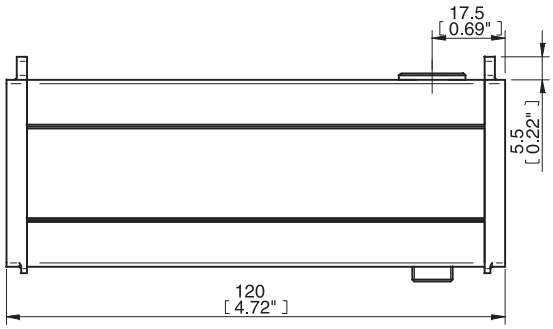
17.5
[0.69"]
5.5
[0.22"]
120
[4.72"]

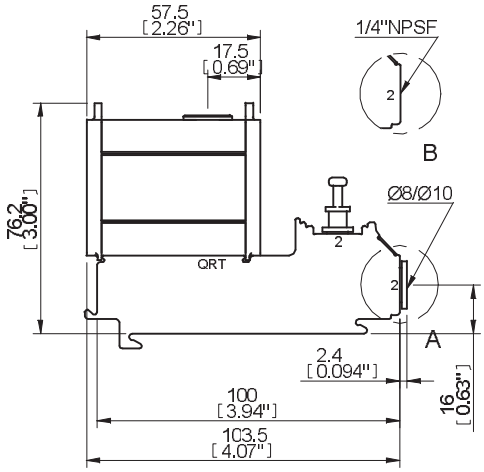
57.5
[2.26"]
17.5
[0.69"]
1/4"NPSF
B
76.2
[3.00"]
Ø8/Ø10
QRT
A
2.4
[0.094"]
100
[3.94"]
103.5
[4.07"]
16
[0.63"]

n

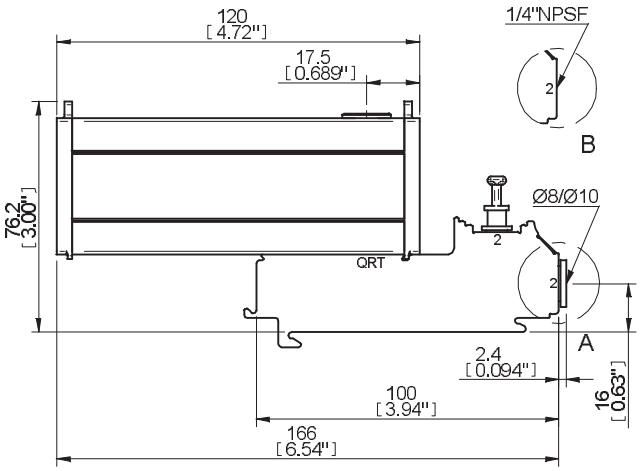
120
[4.72"]
17.5
[0.689"]
1/4"NPSF
B
76.2
[3.00"]
Ø8/Ø10
QRT
A
2.4
[0.094"]
100
[3.94"]
166
[6.54"]
16
[0.63"]

n H

P3010 CONNECTION MODULES

- Patented COAX® technology
- Inline design
- Modular functions available

TECHNICAL DATA

Description	Unit	Value
Temperature range	°F	-4-176
Material		Al, PPS, NBR, CuZn

TECHNICAL DATA, SPECIFIC

Description	Unit	Value		
		01.04.269	01.04.270	01.06.169
Weight	oz	1.76	3.53	6.70

ORDERING INFORMATION

	Description	Part No.	Code No.
A	Connection module P3010, vacuum 3 x 1/8"NPSF	01.04.269	02
B	Connection module P3010, vacuum 6 x 1/8"NPSF	01.04.270	01
C	Connection module P3010, conn. G3/8" or push-in 12 mm and 2 x 1/8"NPSF	01.06.169	03

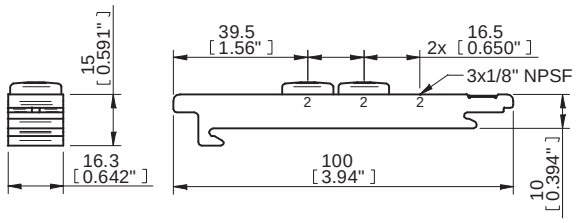

A

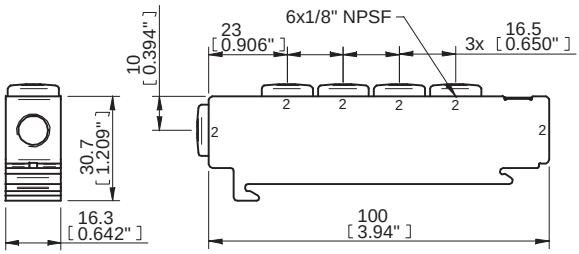

B

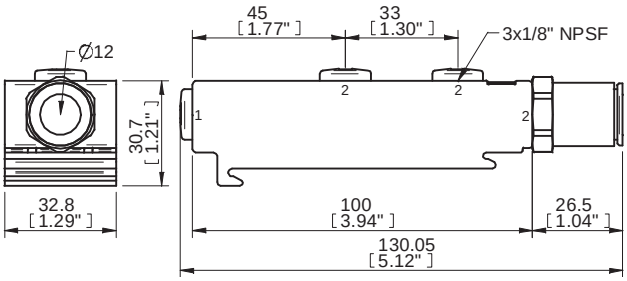

C

SOLENOID VALVE DS 23 FOR CONTROL ON/OFF

- 3/2 Valve
- Body with 3 M5 ports, port 1 and 2 in-line
- Nominal diameter of 2.3 mm
- Suitable for compressed air, filtration 40µ
- 2.5 W solenoid
- Manual override
- Fits vacuum pump P3010

TECHNICAL DATA

Description	Unit	Value
Feed pressure, maximum	psi	101.5
Feed pressure	psi	29-87
Material		Ni, Al, SS, POM, CuZn, NBR
Working temperature	°F	-0.4-122
Weight	oz	3.53
Connection compressed air		D=6
Connection exhaust		D=6
Supply voltage	VDC	24
Safety classification, DIN (c) socket		IP65
Display		LED
Flow, nominal	cf/s	0.05
kv		1.2
Frequency	Hz	>160
Lifespan, mechanical	cycles	100,000,000
Power consumption	W	2.5
Load time rating	%	100
Electrical connection		DIN (c) socket

ORDERING INFORMATION

Description	Part No.	Code No.
Solenoid valve DS 23 for control ON/OFF	01.04.274	AA

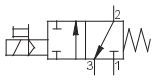

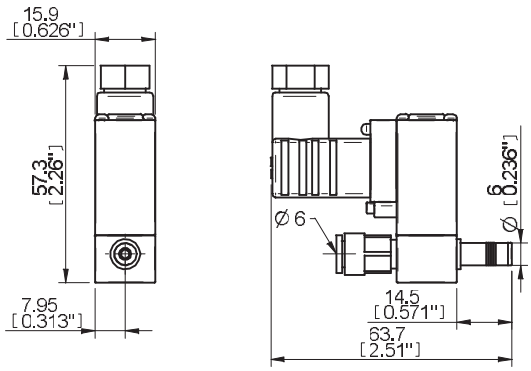

VACUSTAT, 2/2 NO

- The Vacustat is a vacuum-controlled 2/2 NO valve with adjustable vacuum level for switching.
- Minimizes consumption of compressed air by controlling the incoming air flow to a vacuum pump.
- The vacuum pump must be fitted with a non-return valve.
- The Vacustat is recommended for vacuum pumps in sealed systems.
- Fits PIAB vacuum pump size P3010.

TECHNICAL DATA

Description	Unit	Value
Feed pressure	psi	58-101.5
Material		PA, Al, SS, NBR, PUR, TPU, POM, CuZn
Temperature range	°F	32-140
Weight	oz	3.17
Connection vacuum		2 x M5
Connection compressed air		2 x 1/8" NPSF
Signal range	-inHg	4.5-29.2
Function		2/2 NO
Hysteresis	-inHg	2.40
Flow, nominal	scfm	18.2
kv		7.8
Life span, mechanical	cycles	>10,000,000
Diameter, nominal	mm	3.7

A vacuum-controlled valve shuts off the flow of compressed air to the pump when the pre-set vacuum level is reached (1). The vacuum level is set by a knob. Because of minor leakage in a vacuum system the vacuum level drops, and after a while the start-up level of the valve is reached (2). Then the pump will start and work until the shut-off level is reached again (3), etc.

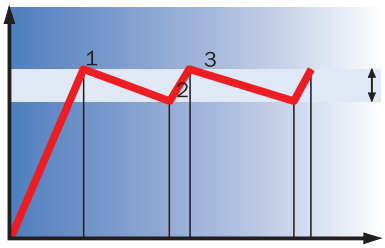

A = Vacuum pump with non-return valve
B = Vacuum switch
C = Feed valve
D = Suction cup
E = Vacuum filter

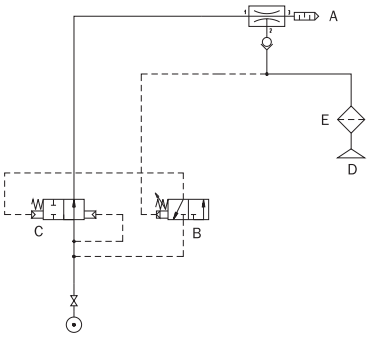

ORDERING INFORMATION

Description	Part No.	Code No.
Vacustat 2 with large hysteresis	01.04.701	AC

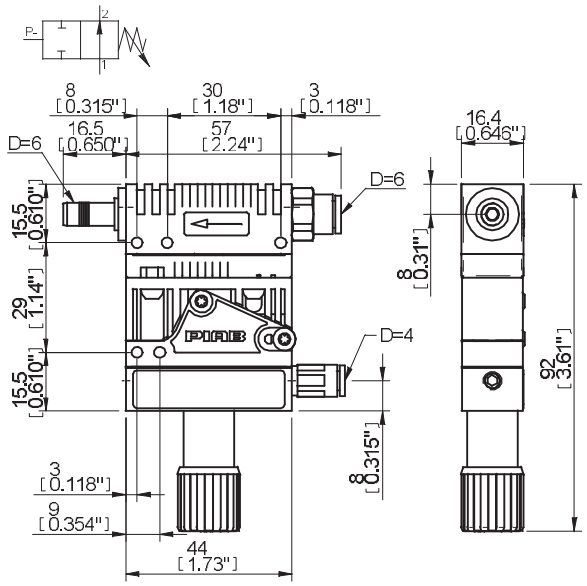

VACUUM SWITCH, ADJUSTABLE WITH ANALOG OUTPUT

- 1 output NO and 1 analog output
- 6 ft cable included, female connector
- Fits vacuum pump P3010

TECHNICAL DATA

Description	Unit	Value
Feed pressure, max	psi	29
Vacuum range	-inHg	0-30
Material		PC, POM, NBR, SS
Temperature range	°F	-4-158
Weight	oz	1.76
Connection vacuum		D=6/M5
Function		NO, NPN/PNP
Hysteresis	%	1–15
Supply voltage	VDC	10.8–30
Voltage output	VDC	1-5
Safety classification		IP40
Analog output, max. (load resistance min. 5kΩ	mA	1
Humidity	% RH	35–85
Response time	ms	2
Accuracy at 77°F		±3% F.S.
Current consumption, max	mA	17
High-voltage resistant	VAC	500
Insulation at 500 VDC	MOhm	100
Vibration resistance, 1,5 mm, XYZ, 2 h	Hz	10–500
Electric connection		M8 4 pin male
Current output, max	mA	80

Non-lubricated air, non-corrosive gases, compatible with Polycarbonate and Polyacetal.

ORDERING INFORMATION

Description	Part No.	P3010 Code No.
Vacuum switch, adjustable, PNP NO MM8	01.07.729	01
Vacuum switch, adjustable, NPN NO MM8	01.07.730	02

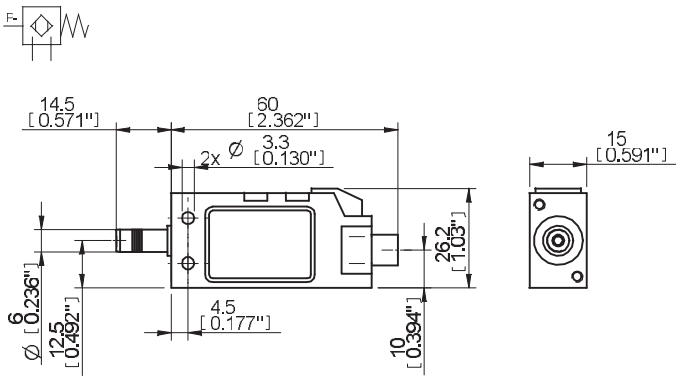

VACUUM SWITCH, ADJUSTABLE WITH 1 OUTPUT

- 1 output NO
- M8 3-pin male connector
- 6 ft cable included, female connection
- Fits vacuum pump P3010

TECHNICAL DATA

Description	Unit	Value
Pressure, max.	psi	29
Vacuum range	-inHg	0–30
Material		PC, Al
Temperature range	°F	14-140
Weight	oz	0.21
Connection vacuum		D=6/M5
Hysteresis		±2% F.S.
Voltage supply	VDC	10.8–30
Safety classification		IP40
Humidity	%RH	35–85
Response time, approx.	ms	1
Accuracy, at 77°F		±3% F.S.
Current consumption, max	mA	20
High-voltage resistance	VDC	500
Insulation at 500 VDC	MOhm	100
Vibration resistance, 1.5 mm, XYZ, 2 h	Hz	10–55
Current output, max	mA	80

Non-lubricated air, non-corrosive gases, compatible with Polycarbonate and Polyacetal.

ORDERING INFORMATION

Description	Part No.	P3010 Code No.
Vacuum switch, adjustable, PNP NO LM8	01.07.731	05

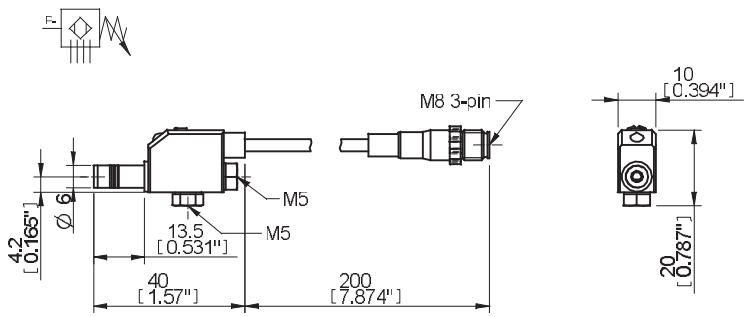

VACUUM SWITCH, ADJUSTABLE WITH LED-DISPLAY

- 2 outputs, NO
- M8 4-pin male connector
- LED - display
- Fits vacuum pump P3010

TECHNICAL DATA

Description	Unit	Value
Feed pressure, max	psi	29
Vacuum range	-inHg	0-30
Material		PC, POM, NBR, Al
Temperature range	°F	14-140
Weight	oz	1.83
Connection vacuum		D=6/M5
Function		NO, NPN/PNP
Hysteresis	-inHg	0.60
Voltage supply	VDC	12–24
Dielectric strength, 1 min	VAC	500
Safety classification		IP40
Humidity	%RH	35–85
Response time	ms	2
Accuracy at 77°F		±3% F.S
Current consumption, maximum	mA	35
Insulation resistance, at 500 VDC	MO/MW	100
Display		2-digits LED
Current output, max	mA	80

Non-lubricated air, non-corrosive gases, compatible with Polycarbonate and Polyacetal.

ORDERING INFORMATION

Description	Part No.	P3010 Code No.
Vacuum switch, adjustable, PNP NO DM8	01.07.732	09
Vacuum switch, adjustable, NPN NO DM8	01.07.733	10

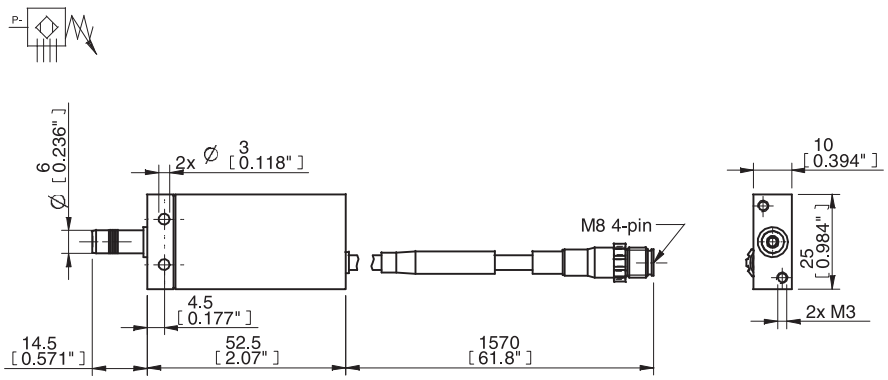

VACUUM SWITCH, ADJUSTABLE WITH KNOB

- The adjustable vacuum switch is actuated at a set vacuum level and set by a knob.
- Converts a vacuum signal to an electric signal.
- Vacuum-actuated membrane linked to a proximity-inductive universal switch.
- The output functions PNP NO, PNP NC, NPN NO and NPN NC are available in the vacuum switch.
- The switch must be connected in series with the load.
- Fits vacuum pump P3010.

TECHNICAL DATA

Description	Unit	Value
Material		PA, SS, NBR, POM, Al, PBTP, PVC, CuZn
Temperature range	°F	-13–176
Signal range	-inHg	3.0-28.0
Hysteresis	-inHg	0.60
Weight	oz	2.50
Connection vacuum		D=6/M5
Function		NO/NC/PNP/NPN
Cable		2 x 0.14 mm² x 6.56 ft
Voltage supply	V DC	24 (4–36)
Safety classification		IP67
Current output, max	mA	200
Voltage drop, max	V	4.6

ORDERING INFORMATION

Description	Part No.	P3010 Code No.
Vacuum switch, inductive universal, adjustable with knob Ø6	01.04.350	11

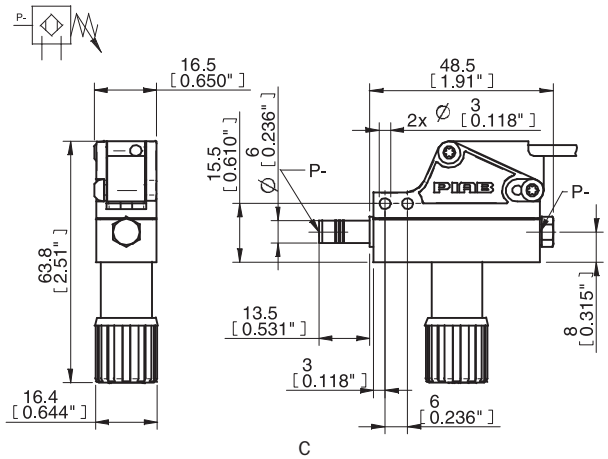

MINI VACUUM SWITCH, PRE-SET

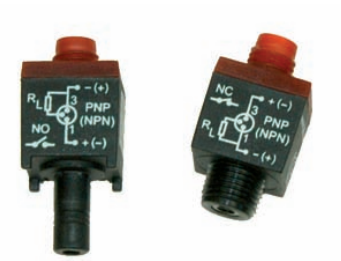

- Electromechanical vacuum switch with digital output
- Very low weight and small format
- Preferably installed near the suction cup
- PNP NO/NC or NPN NO/NC output depending on type of connection
- Preset switching points at 9.0, 15.0 or 21.0 -inHg
- Vacuum connection with push-in connector with D=6 or G1/8” male thread
- Built-in red LED that indicates status
- M8 3-pin electric connection plug
- Fits vacuum pump P3010.

TECHNICAL DATA

Description	Unit	Value
Pressure, max	psi	29
Material		PA, TPU, SS, CuZn(Au)
Temperature range	F°	-13-185
Weight	oz	0.18
Signal range	-inHg	9.0, 15.0 or 21.0 +1.5/-0.30
Function		PNP NO/NC, NPN NO/NC
Hysteresis	-inHg	1.78 ± 0.30
Voltage	VDC	24 (12-30)
Safety classification		IP40
Current max	mA	100 inductive/400 resistive
Voltage drop, max (100mA/24V inductive load)	VDC	0.055
Response time	ms	4
Display		Red LED
Electric connection		M8 3-pin male

ORDERING INFORMATION

	Description	Part No.	P3010 Code No.
A	Vacuum switch VS4015, 9 -inHg, D=6 mm	01.10.245	18
A	Vacuum switch VS4015, 15 -inHg, D=6 mm	01.10.246	19
A	Vacuum switch VS4015, 21 -inHg, D=6 mm	01.10.247	20
B	Vacuum switch VS4016, 9 -inHg, G1/8"	01.10.248	21
B	Vacuum switch VS4016, 15 -inHg, G1/8"	01.10.249	22
B	Vacuum switch VS4016, 21 -inHg, G1/8"	01.10.250	23

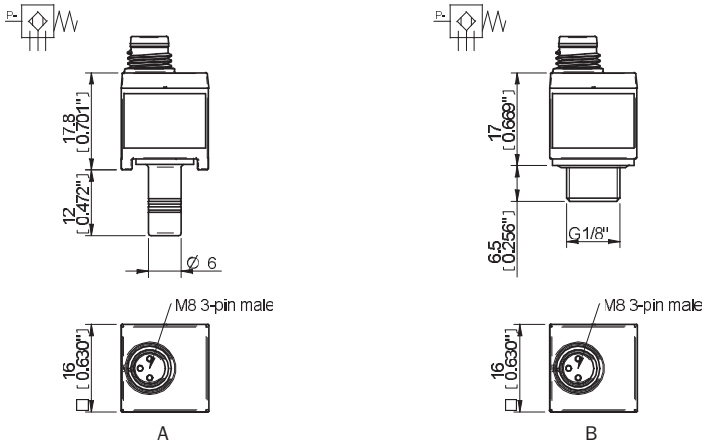

ORDERING INFORMATION, ACCESSORIES

Description	Part No.
Cable M8 3-pin female L=2m	01.08.141

Please note that the cable is not included with the vacuum switch. Please order the cable separately.

P3010 MOUNTING RAIL

- Rigid and easy to mount
- For dynamic loads

TECHNICAL DATA

Description	Unit	Value
Temperature range	°F	14-122
Weight	oz	2.12– 4.23
Material		Al, SS

ORDERING INFORMATION

Description	Part No.
Mounting rail P3010, one pump module	01.06.167
Mounting rail P3010, 2 pump modules	01.06.162
Mounting rail P3010, 3 pump modules	01.06.168
Mounting rail P3010, 4 pump modules	01.06.160

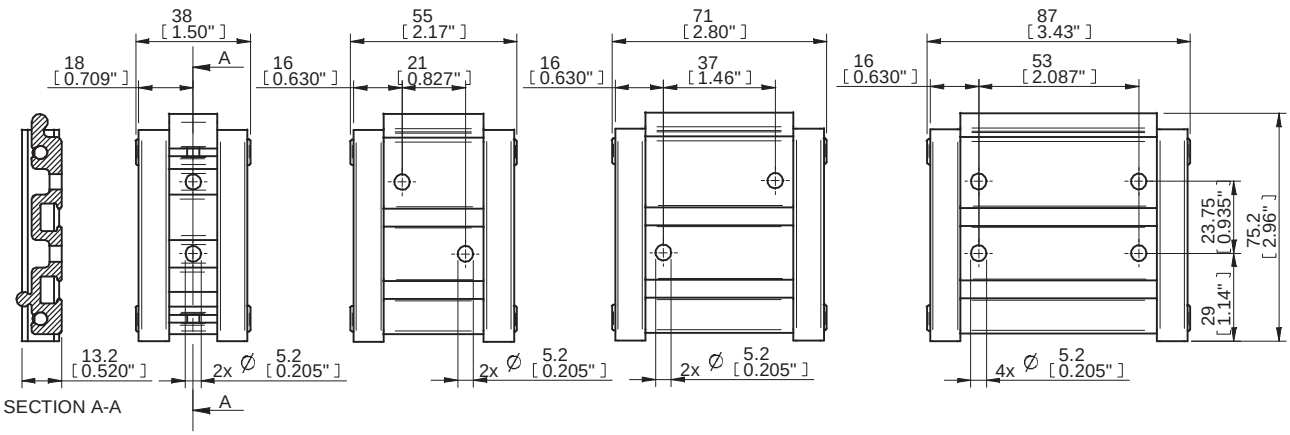

P3010 COMMON-FEED ADAPTERS

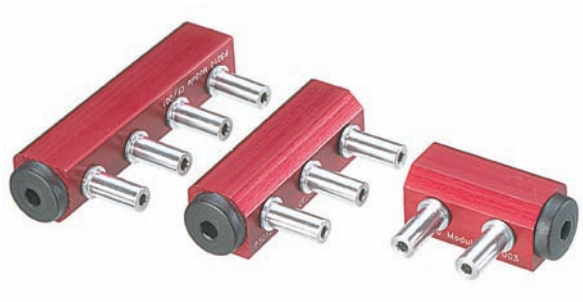

- One compressed air connection required to feed air to several pumps.

TECHNICAL DATA

Description	Unit	Value
Feed pressure, max.	psi	101.5
Temperature range	°F	14-122
Weight	oz	0.71–1.41
Material		Al, PPS

ORDERING INFORMATION

Description	Part No.
Common-feed adapter P3010, 2 pump modules	01.06.157
Common-feed adapter P3010, 3 pump modules	01.06.158
Common-feed adapter P3010, 4 pump modules	01.06.159

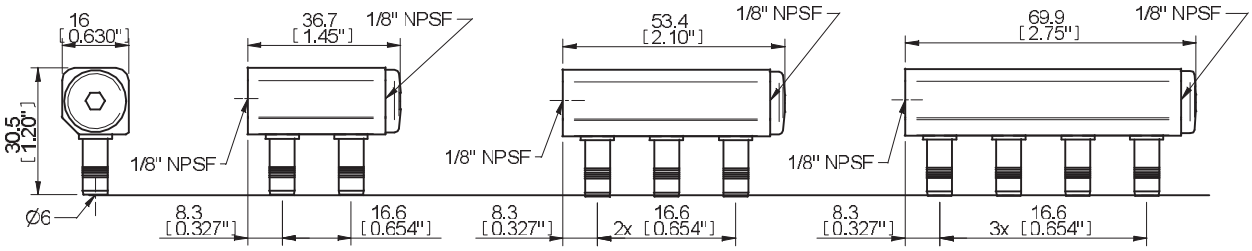

P3010 EXHAUST ADAPTER

- Connection of exhaust air.
- For clean environment.
- Used when a tube/hose is connected for removing the exhaust.

TECHNICAL DATA

Description	Unit	Value
Temperature range	°F	14-122
Weight	oz	0.28
Connection, exhaust		G1/4" / Ø16 mm
Material		Al

ORDERING INFORMATION

Description	Part No.
Exhaust adapter	01.06.344

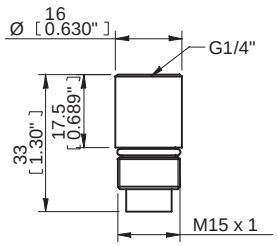

P3010 Pi12-3X1 AVM™

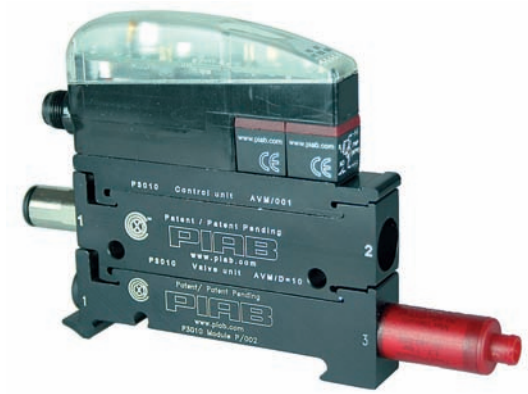

- Patented COAX® technology
- An M12 8-pin electrical interface makes installation easy.
- Two vacuum switches with signal output.
- Valves for vacuum on/off and blow-off.
- Blow-off adjustment valve for flow-rate control.
- Automatic energy-saving function – can be switched off for leaking applications.
- PNP or NPN selectable.
- Reversed polarity protection.

TECHNICAL DATA

Description	Unit	Value
Feed pressure, max.	psi	101.5
Noise level	dBA	66–68
Material		PA, NBR, Al, SS, PMMA, ABS
Temperature range	°F	32-122
Weight	oz	8.82
Voltage	VDC	24 (22-30)
Current consumption	mA	110
Ripple, max.(on power supply)	V_P	1 V_{RMS}, 50–60 Hz
Flow, blow-off	scfm	0–15.9
Current, max. output load	mA	100
Hysteresis	-inHg	1.50 ±0.30
Safety classification		IP65
Display		LED indicators

TECHNICAL DATA, SPECIFIC

Description	Unit	Value					
		01.10.307	01.10.308	01.10.309	01.10.313	01.10.314	01.10.315
Function, on/off		NO	NO	NO	NC	NC	NC
Signal range	-inHg	9.0/15.0	9.0/21.0	15.0/21.0	9.0/15.0	9.0/21.0	15.0/21.0

VACUUM FLOW

Feed pressure	Air consumption	Vacuum flow (scfm) at different vacuum levels (-inHg)										Max vacuum
psi	scfm	0	3	6	9	12	15	18	21	24	27	-inHg
87	1.67	3.39	2.12	1.06	0.87	0.76	0.59	0.36	0.11	0.02	–	24.9
45	1.00	2.97	1.27	0.93	0.57	0.40	0.30	0.21	0.13	0.06	–	27.0
25	0.64	1.91	0.85	0.47	0.32	0.15	–	–	–	–	–	14.7

EVACUATION TIME

Feed pressure	Air consumption	Evacuation time (s/cf) to reach different vacuum levels (-inHg)									Max vacuum
psi	scfm	3	6	9	12	15	18	21	24	24	-inHg
87	1.67	1.70	4.82	10.5	18.4	28.3	39.7	68.0	255	–	24.9
45	1.00	2.27	6.52	13.9	28.3	48.2	73.7	110	178	–	27.0
25	0.64	4.25	13.0	28.3	56.7	–	–	–	–	–	14.7

See page 28 for recommended hose dimensions for compressed air, vacuum & exhaust connections.

ORDERING INFORMATION

Description	Part No.
P3010 AVM™ Pi12-3 NO 9.0/15.0	01.10.307
P3010 AVM™ Pi12-3 NO 9.0/21.0	01.10.308
P3010 AVM™ Pi12-3 NO 15.0/21.0	01.10.309
P3010 AVM™ Pi12-3 NC 9.0/15.0	01.10.313
P3010 AVM™ Pi12-3 NC 9.0/21.0	01.10.314
P3010 AVM™ Pi12-3 NC 15.0/21.0	01.10.315

NO = Normally open valve for vacuum on/off, NC = Normally closed valve for vacuum on/off

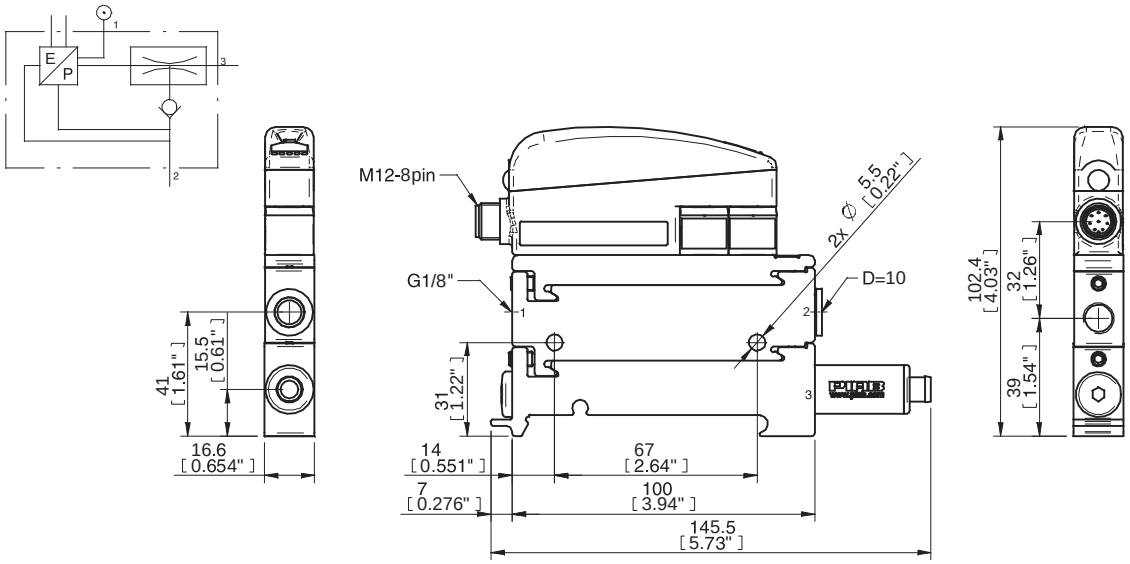

ORDERING INFORMATION, ACCESSORIES

Description	Part No.
Cable 6.5 ft 0.25 x 7 PUR with electrical connector M12 8-pin	01.10.238
Cable Y splitter M12-8 pin / 2xM12-4 pin	01.09.100

Cable Y splitter used to separate input and output signals to/from P3010 AVM™ for a PLC/Controller with separate sides for inputs and outputs or for connection to a fieldbus node with individual M12 inputs and outputs. The Y splitter also allows use of a M12-4 pin cable assembly.

P3010 Pi12-3X2 AVM™

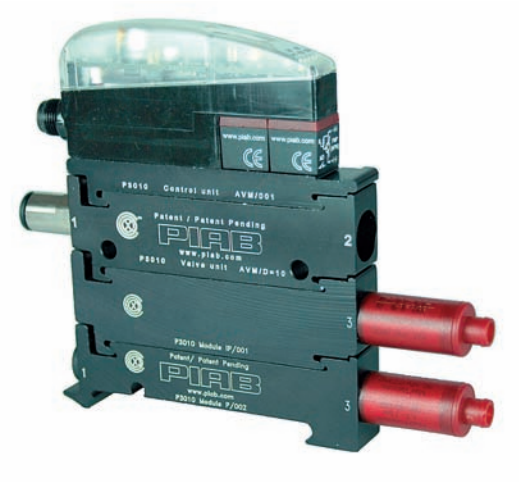

- Patented COAX® technology
- An M12 8-pin electrical interface makes installation easy.
- Two vacuum switches with signal output.
- Valves for vacuum on/off and blow-off.
- Blow-off adjustment valve for flow-rate control.
- Automatic energy-saving function – can be switched off for leaking applications.
- PNP or NPN selectable.
- Reversed polarity protection.

TECHNICAL DATA

Description	Unit	Value
Feed pressure, max.	psi	101.5
Noise level	dBA	66–68
Material		PA, NBR, Al, SS, PMMA, ABS
Temperature range	°F	32-122
Weight	oz	11.6
Voltage	VDC	24 (22-30)
Current consumption	mA	110
Ripple, max.	V_P	1 V_{RMS}, 50–60 Hz
Flow, blow-off	scfm	0-15.9
Current, max. output load	mA	100
Hysteresis	-inHg	1.5 ±0.30
Safety classification		IP65
Display		LED indicators

TECHNICAL DATA, SPECIFIC

Description	Unit	Value					
		01.10.310	01.10.311	01.10.312	01.10.316	01.10.317	01.10.318
Function, on/off		NO	NO	NO	NC	NC	NC
Signal range	-inHg	9.0/15.0	9.0/21.0	15.0/21.0	9.0/15.0	9.0/21.0	15.0/21.0

VACUUM FLOW

Feed pressure	Air consumption	Vacuum flow (scfm) at different vacuum levels (-inHg)										Max vacuum
psi	scfm	0	3	6	9	12	15	18	21	24	27	-inHg
87	3.39	6.78	4.24	2.12	1.74	1.53	1.19	0.72	0.21	0.04	–	24.9
45	1.99	5.93	2.54	1.86	1.14	0.81	0.59	0.42	0.25	0.13	–	27.0
25	1.27	3.81	1.70	0.93	0.64	0.30	–	–	–	–	–	14.7

EVACUATION TIME

Feed pressure	Air consumption	Evacuation time (s/cf) to reach different vacuum levels (-inHg)									Max vacuum
psi	scfm	3	6	9	12	15	18	21	24	27	-inHg
87	3.39	0.85	2.41	5.38	9.35	14.2	19.8	34.0	127	–	24.9
45	1.99	1.13	3.40	7.08	14.2	24.1	36.8	56.7	90.7	-	27.0
25	1.27	2.12	6.52	14.2	28.3	–	–	–	–	–	14.7

See page 28 for recommended hose dimensions for compressed air, vacuum & exhaust connections.

ORDERING INFORMATION

Description	Part No.
P3010 AVM™ Pi12-3 x 2 NO 9.0/15.0	01.10.310
P3010 AVM™ Pi12-3 x 2 NO 9.0/21.0	01.10.311
P3010 AVM™ Pi12-3 x 2 NO 15.0/21.0	01.10.312
P3010 AVM™ Pi12-3 x 2 NC 9.0/15.0	01.10.316
P3010 AVM™ Pi12-3 x 2 NC 9.0/21.0	01.10.317
P3010 AVM™ Pi12-3 x 2 NC 15.0/21.0	01.10.318

NO = Normally open valve for vacuum on/off, NC = Normally closed valve for vacuum on/off

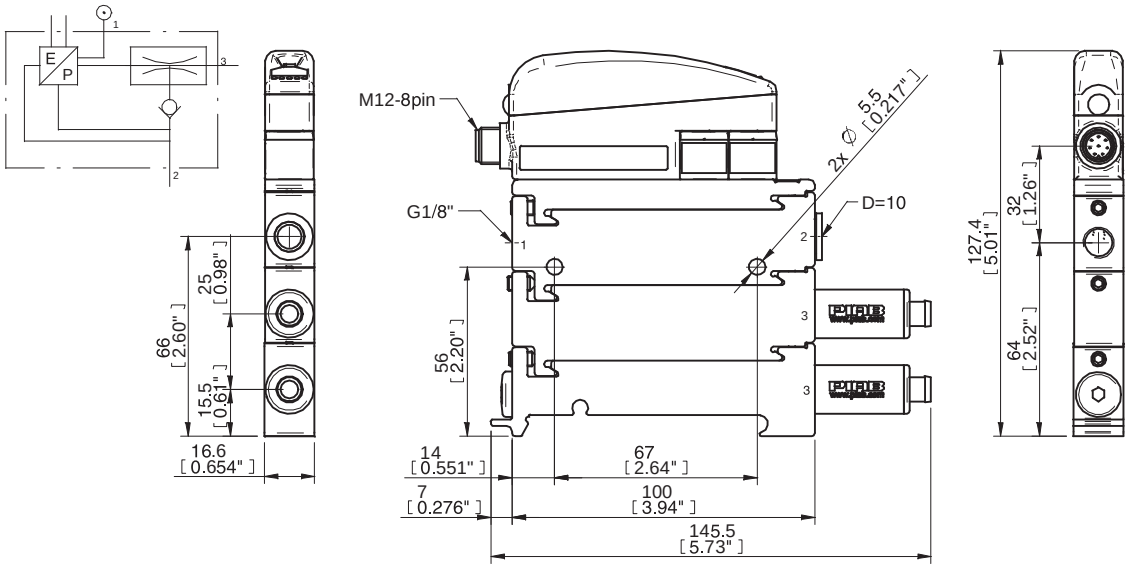

ORDERING INFORMATION, ACCESSORIES

Description	Part No.
Cable 6.5 ft 0.25 x 7 PUR with electrical connector M12 8-pin	01.10.238
Cable Y splitter M12-8 pin / 2xM12-4 pin	01.09.100

Cable Y splitter used to separate input and output signals to/from P3010 AVM™ for a PLC/Controller with separate sides for inputs and outputs or for connection to a fieldbus node with individual M12 inputs and outputs. The Y splitter also allows use of a M12-4 pin cable assembly.

PMAT COAX®

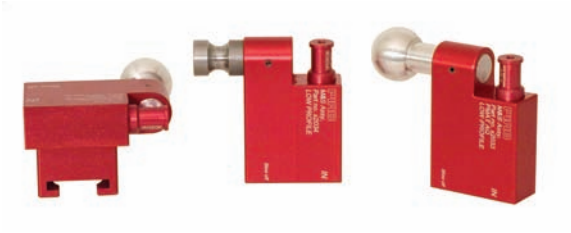

- Patented COAX® technology.
- Reliable even at low operating feed pressure.
- Equipped with a built-in blow-off valve to provide quick release of the object.
- Low height
- Mounting possibilities with lock pin, ball joint or T-slot (suction cup) in accordance with industry standards for end-of-arm tooling.

TECHNICAL DATA

Description	Unit	Value
Feed pressure, max.	psi	101.5
Feed pressure, min., breakaway blow-off	psi	36.25
Feed pressure, optimum COAX®	psi	45
Air consumption, 45 psi	scfm	1.00
Vacuum, 45 psi	-inHg	27.0
Noise level, with load	dBA	65
Noise level, without load	dBA	74
Material		PA, AL, Steel, Ceramic, NBR
Temperature range	°F	14-122
Vacuum flow, max.	scfm	1.44

TECHNICAL DATA, SPECIFIC

Description	Unit	Value		
		2027	2026	2091
Weight	oz	7.55	8.64	10.3
Connection, mounting		Ball joint	Lock pin 0.75 in	Ball joint
Connection, suction cup		3/8" NPT	3/8" NPT	T-slot

VACUUM FLOW

Feed pressure	Air consumption	Vacuum flow (scfm) at different vacuum levels (-inHg)										Max vacuum
psi	scfm	0	3	6	9	12	15	18	21	24	27	-inHg
45	1.00	1.44	1.27	0.93	0.57	0.40	0.30	0.21	0.13	0.06	—	27.0

EVACUATION TIME

Feed pressure	Air consumption	Evacuation time (s/cf) to reach different vacuum levels (-inHg)									Max vacuum
psi	scfm	3	6	9	12	15	18	21	24	27	-inHg
45	1.00	4.82	9.07	16.4	31.2	51.0	76.5	113	181	—	27.0

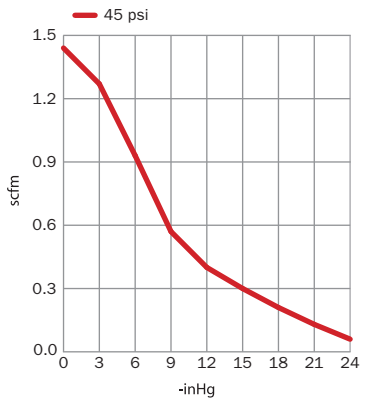

Vacuum flow

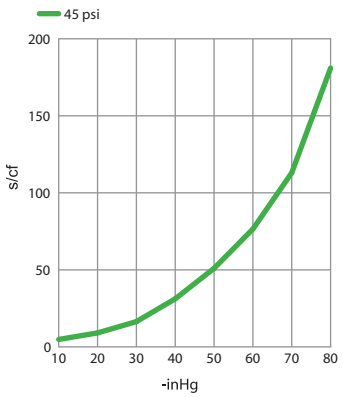

Evacuation time

ORDERING INFORMATION

	Description	Part No.
A	PMAT COAX® Pi12-2, low profile, ball joint	2027
B	PMAT COAX® Pi12-2, low profile, lock pin 19 mm	2026
C	PMAT COAX® Pi12-2, low profile, T-slot, ball joint	2091

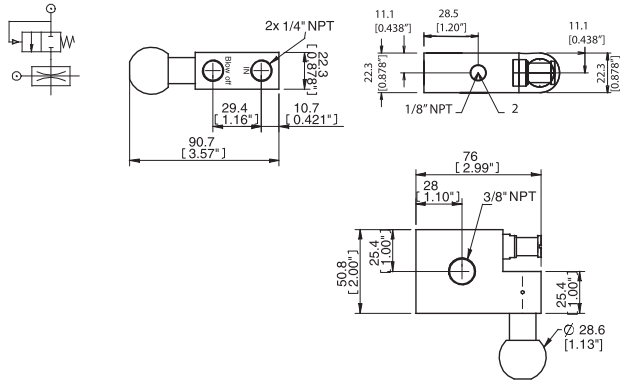

A

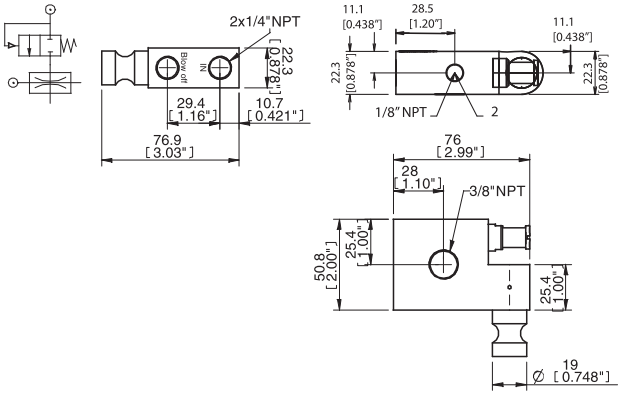

B

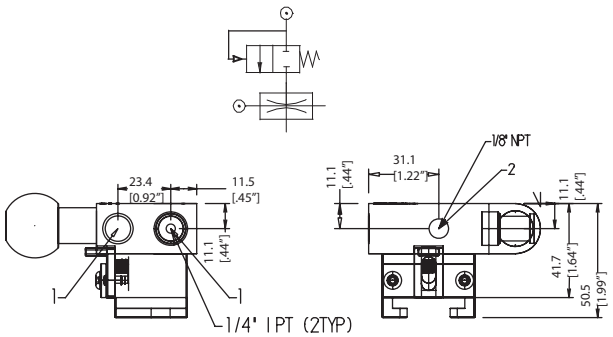

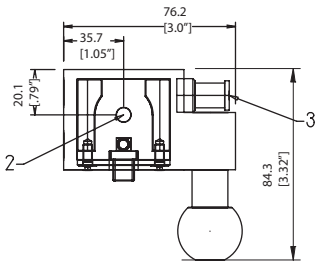

C

VACUUM PUMPS PMAT

VACUSTAT COAX®

- Patented COAX® technology.
- Vacuum unit for a decentralized system.
- Integrated energy-saving device, the Vacustat, results in virtually no compressed air consumption during operartion in sealed applications, such as sheet metal handling.
- The air-saving function is activated at a fixed setting of 20 -inHg.
- Equipped with a built-in blow-off check valve to provide quick release of the object with compressed air supplied from the outside.
- Available in lock pin, ball joint or apple core mounting in accordance with industry standards for end-of-arm tooling.

TECHNICAL DATA

Description	Unit	Value
Feed pressure, optimum	psi	45
Feed pressure, maximum	psi	101.5
Feed pressure, min. breakaway blow-off	psi	36.25
Noise level	dBA	66-68
Temperature range	°F	14-122
Material		PP, PA, AL, SS, Steel, Ceramic, Brass, NBR
Vacuum flow, max.	scfm	1.44

TECHNICAL DATA, SPECIFIC

Description	Unit	Value		
		2052	2051	2054
Height (A)	in	3.00	3.56	3.03
Weight	oz	11.4	10.6	11.7

VACUUM FLOW

Feed pressure	Air consumption	Vacuum flow (scfm) at different vacuum levels (-inHg)										Max vacuum
psi	scfm	0	3	6	9	12	15	18	21	24	27	-inHg
45	1.00	1.44	1.27	0.93	0.57	0.40	0.30	0.21	0.13	0.06	—	27.0

EVACUATION TIME

Feed pressure	Air consumption	Evacuation time (s/cf) to reach different vacuum levels (-inHg)									Max vacuum
psi	scfm	3	6	9	12	15	18	21	24	27	-inHg
45	1.00	4.82	9.07	16.4	31.2	51.0	76.5	113	181	—	27.0

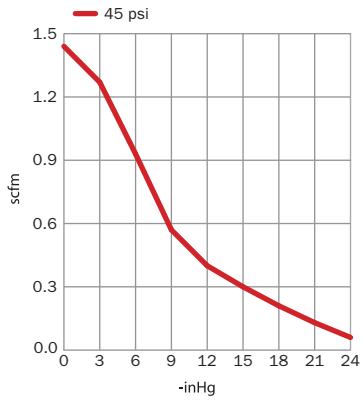

Vacuum flow

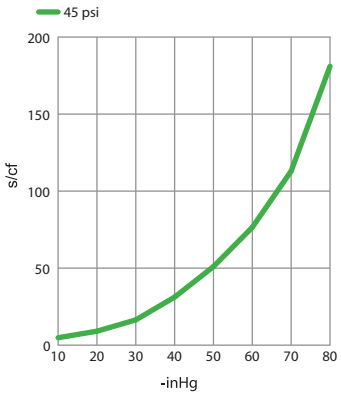

Evacuation time

ORDERING INFORMATION

Description	Part No.
Lock pin mounting	2052
Ball joint mounting	2051
Apple core mounting	2054

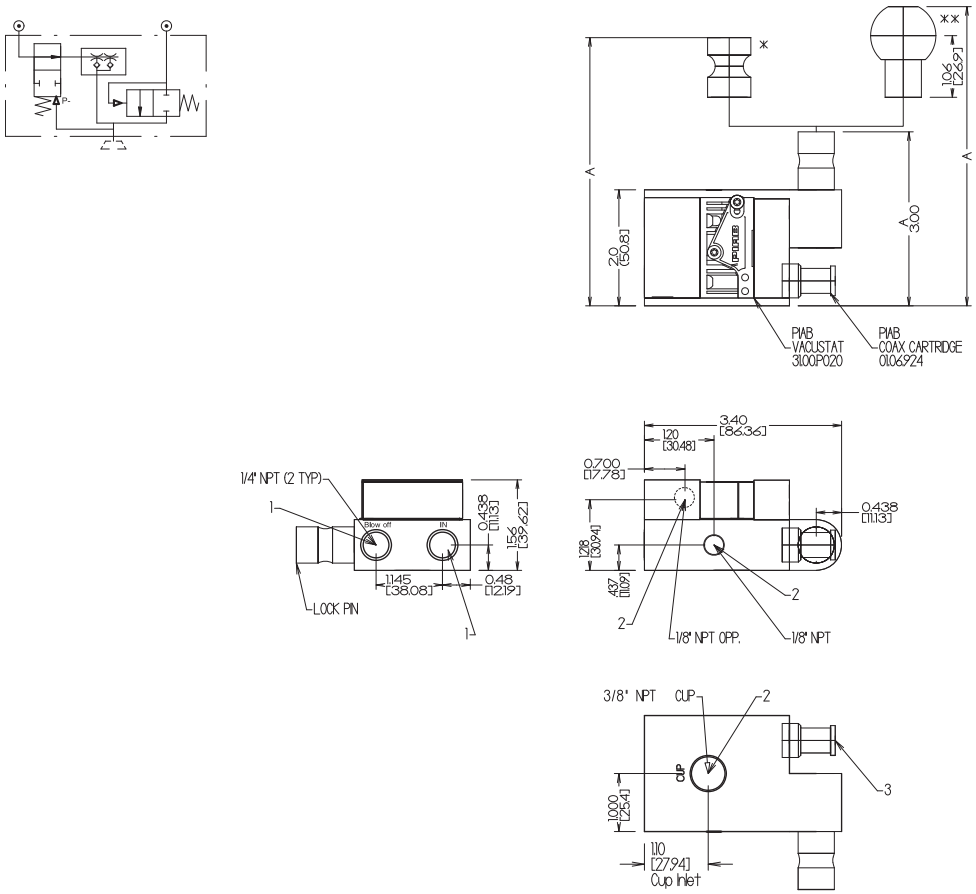

*Apple Core **Ball Joint

For more info about VACUSTAT, see separate data sheet in ACCESSORIES chapter.

VACTRAP™ WITH COAX® CARTRIDGE

VACUUM PUMP WITH INTEGRATED VACUUM SAFETY VALVE

- "COAX® patented technology" means faster response and lower energy consumption.
- Reliable even at low operating feed pressure.
- Check valve that "traps" the vacuum pressure in vacuum systems for an indefinite period of time in sealed applications, such as when handling sheet metal or glass with suction cups.
- The object can be handled with an extremely high degree of safety even if the supply of compressed air should be cut off, if a pump failure should occur or if the emergency stop should be activated, thus preventing the object from being dropped.
- Equipped with a built-in blow-off check valve to provide quick release of the object with compressed air supplied from the outside.

TECHNICAL DATA

Description	Unit	Value
Feed pressure, max.	psi	101.5
Feed pressure, min., breakaway blow-off	psi	36.25
Feed pressure, optimum COAX®	psi	45
Air consumption, 45 psi	scfm	1.00
Vacuum, 45 psi	-inHg	27.0
Noise level, with load	dBA	65
Noise level, without load	dBA	74
Weight	oz	10.4
Material		PP, PA, AL, Steel, Ceramic, Brass, NBR
Temperature range	°F	14-122
Vacuum flow, max.	scfm	1.44

VACUUM FLOW

Feed pressure	Air consumption	Vacuum flow (scfm) at different vacuum levels (-inHg)										Max vacuum
psi	scfm	0	3	6	9	12	15	18	21	24	27	-inHg
45	1.00	1.44	1.27	0.93	0.57	0.40	0.30	0.21	0.13	0.06	—	27.0

EVACUATION TIME

Feed pressure	Air consumption	Evacuation time (s/cf) to reach different vacuum levels (-inHg)									Max vacuum
psi	scfm	3	6	9	12	15	18	21	24	27	-inHg
45	1.00	4.82	9.07	16.4	31.2	51.0	76.5	113	181	—	27.0

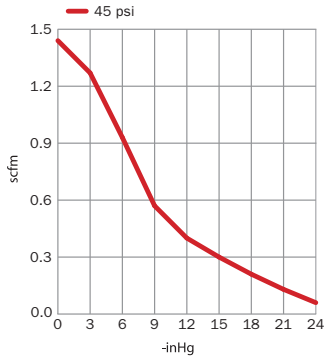

Vacuum flow

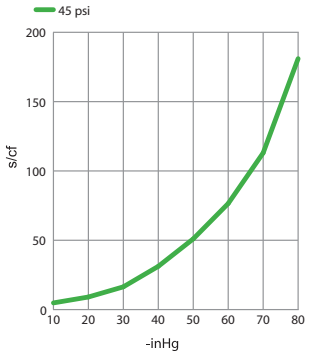

Evacuation time

Specifications subject to change without notice.

ORDERING INFORMATION

Description	Part No.
Vactrap™ VT1-AS COAX® Pi12-2	1041

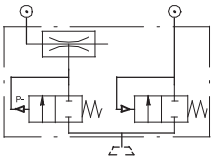

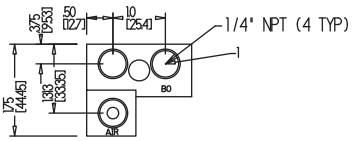

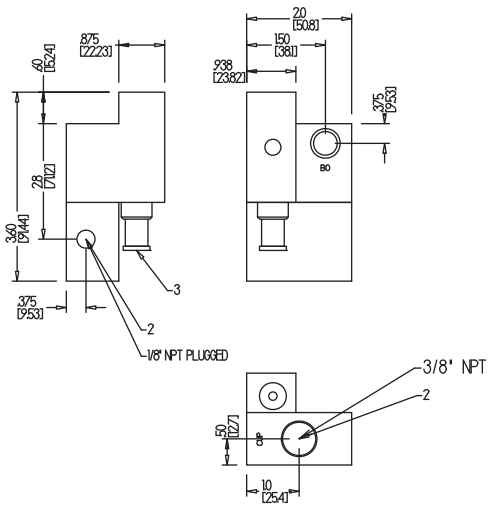

P6010 Pi48-3

- Patented COAX® technology
- Substantially lower air-consumption as compared to conventional ejectors
- Modular design
- Low feed pressure that ensures high reliability even in case of pressure drops
- Short evacuation time
- "Classic" mounting style option available
- Supplied with a vacuum gauge, flow-through silencerand optional vacuum filter

TECHNICAL DATA

Description	Unit	Value
Feed pressure, max	psi	101.5
Noise level	dBA	65-70 (Classic style = 50-65)
Temperature range	°F	14-176
Weight	lb	3.74-3.96
Material		Al, PA, NBR, SS, TPE

VACUUM FLOW

COAX® Cartridge	Feed pressure	Air consumption	Vacuum flow (scfm) at different vacuum levels										Max vacuum
	psi	scfm	0	3	6	9	12	15	18	21	24	27	-inHg
Pi48-3x1	32	3.43	10.6	4.24	3.18	1.91	1.17	0.95	0.55	0.15	—	—	21.6
Pi48-3x1	44	4.24	11.9	5.30	3.81	2.33	1.38	1.06	0.74	0.53	0.21	—	27.0
Pi48-3x1	58	5.38	12.1	5.30	4.45	3.18	2.33	1.40	0.76	0.55	0.17	—	25.4
Pi48-3x2	32	6.87	21.2	8.48	6.36	3.81	2.33	1.91	1.10	0.30	—	—	21.6
Pi48-3x2	44	8.48	23.7	10.6	7.63	4.66	2.75	2.12	1.48	1.06	0.42	—	27.0
Pi48-3x2	58	10.8	24.2	10.6	8.90	6.36	4.66	2.75	1.48	1.10	0.34	—	25.4
Pi48-3x3*	32	10.3	31.8	12.7	9.54	5.72	3.60	2.97	1.65	0.44	—	—	21.6
Pi48-3x3*	44	12.7	35.6	15.9	11.4	6.99	4.24	3.18	2.33	1.59	0.64	—	27.0
Pi48-3x3*	58	16.1	36.2	15.9	13.3	9.54	6.99	4.24	2.33	1.65	0.51	—	25.4
Pi48-3x4*	32	13.7	42.4	17.0	12.7	7.63	4.66	3.81	2.12	0.59	—	—	21.6
Pi48-3x4*	44	17.0	47.5	21.2	15.3	9.32	5.51	4.24	2.97	2.12	0.85	—	27.0
Pi48-3x4*	58	21.5	48.3	21.2	17.8	12.7	9.32	5.51	2.97	2.12	0.68	—	25.4

EVACUATION TIME

COAX® Cartridge	Feed pressure	Air consumption	Evacuation time (s/cf) to reach different vacuum levels (-inHg)									Max vacuum
	psi	scfm	3	6	9	12	15	18	21	24	27	-inHg
Pi48-3x1	32	3.43	0.71	2.27	4.82	8.50	14.2	22.7	48.2	—	—	21.6
Pi48-3x1	44	4.24	0.57	1.70	3.40	8.50	12.7	19.8	28.3	45.3	113	27.0
Pi48-3x1	58	5.38	0.57	1.56	3.12	5.10	8.22	16.7	25.5	48.2	127	25.4
Pi48-3x2	32	6.87	0.37	1.13	2.41	4.25	7.08	11.3	24.1	—	—	21.6
Pi48-3x2	44	8.48	0.28	0.85	1.70	3.68	6.52	9.92	14.2	22.7	56.7	27.0
Pi48-3x2	58	10.8	0.28	0.79	1.56	2.55	4.25	8.50	12.7	24.1	65.2	25.4
Pi48-3x3*	32	10.3	0.23	0.76	1.61	2.83	4.82	7.65	16.1	—	—	21.6
Pi48-3x3*	44	12.7	0.20	0.57	1.13	2.35	4.25	6.52	9.35	15.0	36.8	27.0
Pi48-3x3*	58	16.1	0.20	0.51	1.05	1.70	2.75	5.67	8.50	16.1	42.5	25.4
Pi48-3x4*	32	13.7	0.17	0.57	1.22	2.12	3.68	5.67	12.2	—	—	21.6
Pi48-3x4*	44	17.0	0.14	0.42	0.85	1.78	3.12	5.10	7.08	11.3	28.3	27.0
Pi48-3x4*	58	21.5	0.14	0.40	0.79	1.27	2.07	4.25	6.52	12.2	31.2	25.4

** Vacuum performance is reduced by 20-30% when using the 3/4" NPSF "Classic" style cover plate (code LK) between 0-9 -inHg. See page 28 for recommended hose dimensions for compressed air, vacuum & exhaust connections.*

BLOW FLOW

COAX® Cartridge	Feed pressure	Air consumption	Blow flow (scfm) at different pressure levels (psi)												Max pressure
	psi	scfm	0	3	6	9	10	12	13	15	16	17	19	20	psi
Pi48-3x1	87	7.52	20.1	13.8	12.7	11.2	9.96	9.75	9.75	9.75	9.54	9.11	8.48	7.84	20
Pi48-3x2	87	15.0	40.3	27.5	25.4	22.5	19.9	19.5	19.5	19.5	19.1	18.2	17.0	15.7	20
Pi48-3x3	87	22.6	61.4	41.3	38.1	33.7	29.9	29.2	29.2	29.2	28.6	27.3	25.4	23.5	20
Pi48-3x4	87	30.1	80.5	55.1	50.9	44.9	39.8	39.0	39.0	39.0	38.1	36.4	33.9	31.4	20

ORDERING INFORMATION

	1. COAX® Cartridge Module	P6010 Code
a	COAX® Cartridge Pi48-3 x1	AJ
b	COAX® Cartridge Pi48-3 x1 with non-return valve	AN
a	COAX® Cartridge Pi48-3 x2	AK
b	COAX® Cartridge Pi48-3 x2 with non-return valve	AO
a	COAX® Cartridge Pi48-3 x3	AL
b	COAX® Cartridge Pi48-3 x3 with non-return valve	AP
a	COAX® Cartridge Pi48-3 x4	AM
b	COAX® Cartridge Pi48-3 x4 with non-return valve	AQ

2. Mounting and cover plate	P6010 Code
Mounting T-slot	01

3. Function and cover plate	P6010 Code
Cover plates Standard style NPSF threads (No function)	LJ
Cover plates Classic style NPSF threads (No function)	LK

4. Connections for vacuum and exhaust	P6010 Code
2 x 1" NPSF with silencer 1" Standard style	56
2 x 3/4" NPSF with silencer 3/4" Classic style	58

5. Vacuum filter	P6010 Code
None	XX
Vacuum filter, 1" NPT (Standard size)	FA
Vacuum filter, 3/4" NPT (Classic size)	FB

Example	Ordering number
P6010, Pi48-3 x1, mounting T-slot, cover plates (Standard-no function), 2 x1" NPSF with silencer 1" & vacuum filter 1"	P6010.AJ.01.LJ.56.FA
P6010, Pi48-3 x1, mounting T-slot, cover plates (Classic-no function), 2 x3/4" NPSF with silencer 3/4" & vacuum filter 3/4"	P6010.AJ.01.LK.58.FB

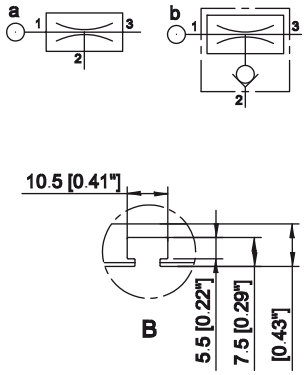

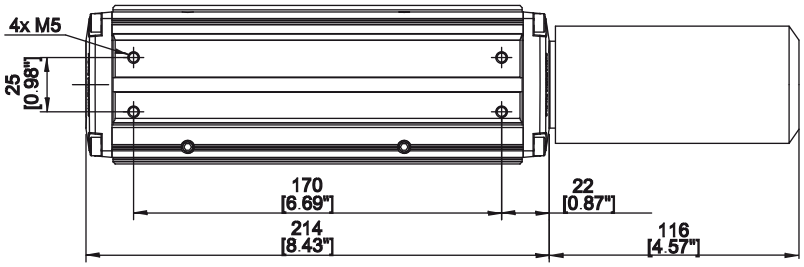

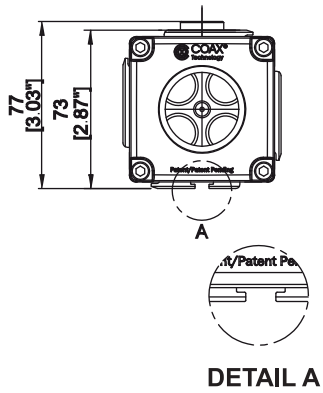

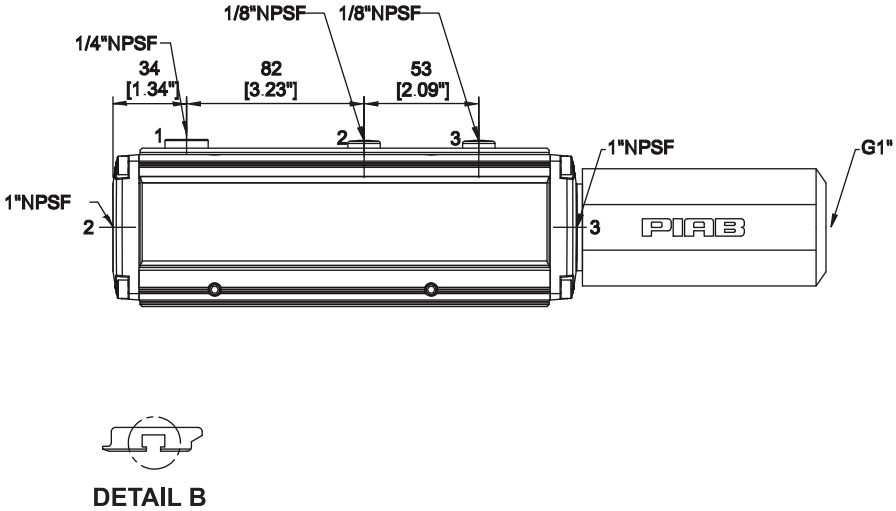

Standard style

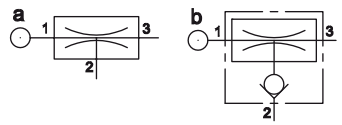

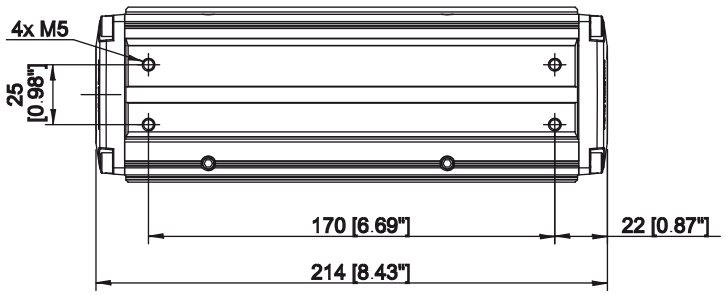

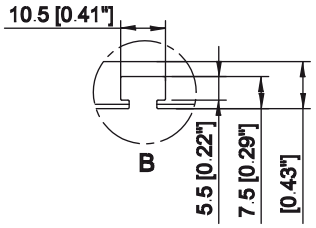

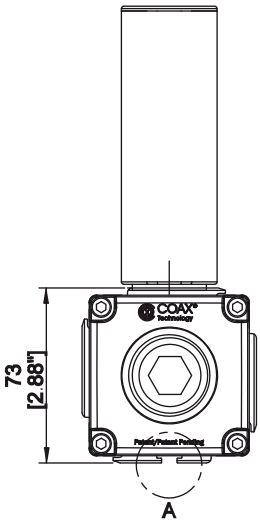

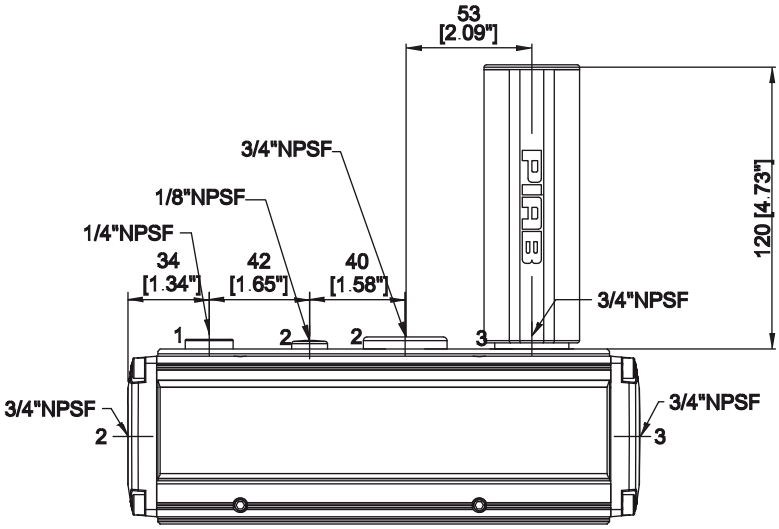

DETAIL A

DETAIL B

Classic style

ORDERING INFORMATION, ACCESSORIES

Description	PartNo
Silencer G3/4"	32.16.002
Silencer 1" NPSF	01.13.003
Manometer 250 kPa	01.12.533
Manometer 1 Mpa	01.12.532
Gauge 30-inHg/100-kPa with teflon	01.12.531
Vacuum filter, 3/4" NPT	PPSF.75-X35
Vacuum filter 1" NPT	PPSF1.0-X50
Seal kit P6010, NBR seals	01.12.495

P6010 Si32-3

- Patented COAX® technology
- Substantially lower air-consumption as compared to conventional ejectors
- Modular design
- High flow - suitable for handling of porous objects and in case of leakage
- Short evacuation time
- "Classic" mounting style option available
- Supplied with a vacuum gauge, flow-through silencer and optional vacuum filter

TECHNICAL DATA

Description	Unit	Value
Feed pressure, max	psi	101.5
Noise level	dBA	65-70 (Classic style = 50-65)
Temperature range	°F	14-176
Weight	lb	3.74-3.96
Material		Al, PA, NBR, SS, TPE

VACUUM FLOW

COAX® Cartridge	Feed pressure	Air consumption	Vacuum flow (scfm) at different vacuum levels										Max vacuum
	psi	scfm	0	3	6	9	12	15	18	21	24	27	-inHg
Si32-3x1	58	2.65	10.6	6.14	4.03	2.54	1.70	0.85	0.21	—	—	—	18.0
Si32-3x1	72.5	3.18	12.1	6.99	4.66	2.97	1.80	1.31	0.74	0.38	—	—	21.0
Si32-3x1	87	3.71	12.7	7.42	5.51	3.60	1.91	1.27	1.06	0.74	—	—	22.2
Si32-3x2	58	5.30	21.2	12.3	8.05	5.09	3.39	1.70	0.42	—	—	—	18.0
Si32-3x2	72.5	6.36	24.2	14.0	9.32	5.93	3.60	2.54	1.48	0.76	—	—	21.0
Si32-3x2	87	7.42	25.4	14.8	11.0	7.20	3.81	2.54	2.12	1.48	—	—	22.2
Si32-3x3*	58	7.95	31.8	18.4	12.1	7.63	5.09	2.54	0.64	—	—	—	18.0
Si32-3x3*	72.5	9.54	36.2	21.0	14.0	8.90	5.51	3.81	2.33	1.14	—	—	21.0
Si32-3x3*	87	11.1	38.1	22.2	16.5	10.8	5.72	3.81	3.18	2.33	—	—	22.2
Si32-3x4*	58	10.6	42.4	24.6	16.1	10.2	6.78	3.39	0.85	—	—	—	18.0
Si32-3x4*	72.5	12.7	48.3	28.0	18.6	11.9	7.20	5.09	2.97	1.53	—	—	21.0
Si32-3x4*	87	14.8	50.9	29.7	22.0	14.4	7.63	5.09	4.24	2.97	—	—	22.2

EVACUATION TIME

COAX® Cartridge	Feed pressure	Air consumption	Evacuation time (s/cf) to reach different vacuum levels (-inHg)									Max vacuum
	psi	scfm	3	6	9	12	15	18	21	24	27	-inHg
Si32-3x1	58	2.65	0.85	1.98	3.97	6.80	11.9	28.3	—	—	—	18.0
Si32-3x1	72.5	3.18	0.57	1.70	3.12	5.95	9.90	17.0	28.3	—	—	21.0
Si32-3x1	87	3.71	0.57	1.42	2.83	5.10	9.35	15.0	22.7	—	—	22.2
Si32-3x2	58	5.30	0.42	0.99	1.98	3.40	5.95	14.2	—	—	—	18.0
Si32-3x2	72.5	6.36	0.28	0.85	1.56	3.12	5.10	8.50	14.2	—	—	21.0
Si32-3x2	87	7.42	0.28	0.71	1.42	2.55	4.82	7.65	11.3	—	—	22.2
Si32-3x3*	58	7.95	0.28	0.65	1.33	2.27	3.97	9.35	—	—	—	18.0
Si32-3x3*	72.5	9.54	0.20	0.57	1.05	1.98	3.40	5.67	9.35	—	—	21.0
Si32-3x3*	87	11.1	0.20	0.48	0.93	1.70	3.12	5.10	7.65	—	—	22.2
Si32-3x4*	58	10.6	0.23	0.51	0.99	1.70	3.12	7.08	—	—	—	18.0
Si32-3x4*	72.5	12.7	0.14	0.42	0.79	1.50	2.49	4.25	7.08	—	—	21.0
Si32-3x4*	87	14.8	0.14	0.37	0.71	1.27	2.35	3.68	5.67	—	—	22.2

** Vacuum performance is reduced by 20-30% when using the 3/4" NPSF "Classic" style cover plate (code LK) between 0-9 -inHg. See page 28 for recommended hose dimensions for compressed air, vacuum & exhaust connections.*

BLOW FLOW

COAX® Cartridge	Feed pressure	Air consumption	Blow flow (scfm) at different pressure levels (psi)									Max pressure
	psi	scfm	0	2	3	4	6	7	9	10	12	psi
Si32-3x1	87	3.71	16.5	11.4	9.75	8.05	6.99	6.57	5.72	4.87	3.81	12
Si32-3x2	87	7.42	32.8	22.9	19.5	16.1	14.0	13.1	11.4	9.75	7.63	12
Si32-3x3	87	11.1	49.4	34.3	29.2	24.2	21.0	19.7	17.2	14.6	11.4	12
Si32-3x4	87	14.8	65.7	45.8	39.0	32.2	28.0	26.3	22.9	19.5	15.3	12

ORDERING INFORMATION

	1. COAX® Cartridge Module	P6010 Code
a	COAX® Cartridge Si32-3 x1	AB
b	COAX® Cartridge Si32-3 x1	AF
a	COAX® Cartridge Si32-3 x2	AC
b	COAX® Cartridge Si32-3 x2	AG
a	COAX® Cartridge Si32-3 x3	AD
b	COAX® Cartridge Si32-3 x3	AH
a	COAX® Cartridge Si32-3 x4	AE
b	COAX® Cartridge Si32-3 x4	AI

2. Mounting and cover plate	P6010 Code
Mounting T-slot	01

3. Function and cover plate	P6010 Code
Cover plates Standard style NPSF threads (No function)	LJ
Cover plates Classic style NPSF threads (No function)	LK

4. Connections for vacuum and exhaust	P6010 Code
2 x 1" NPSF with silencer 1" Standard style	56
2 x 3/4" NPSF with silencer 3/4" Classic style	58

5. Vacuum filter	P6010 Code
None	XX
Vacuum filter, 1" NPT (Standard size)	FA
Vacuum filter, 3/4" NPT (Classic size)	FB

Example	Ordering number
P6010, Si32-3 x1, mounting T-slot, cover plates (Standard-no function), 2 x 1" NPSF with silencer 1" & vacuum filter 1"	P6010.AB.01.LJ.56.FA
P6010, Si32-3 x1, mounting T-slot, cover plates (Classic-no function), 2 x 3/4" NPSF with silencer 3/4" & vacuum filter 3/4"	P6010.AB.01.LK.58.FB

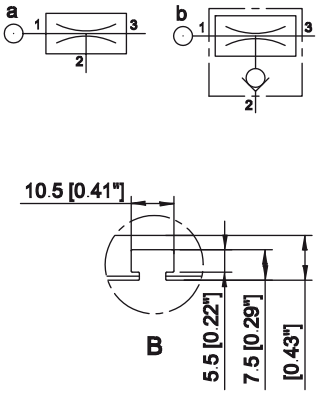

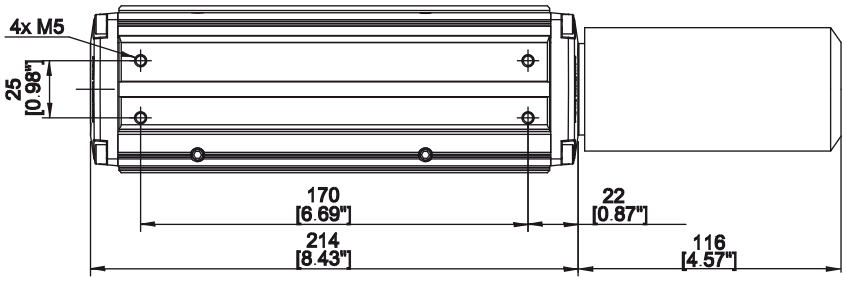

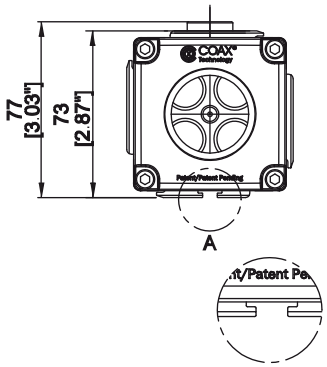

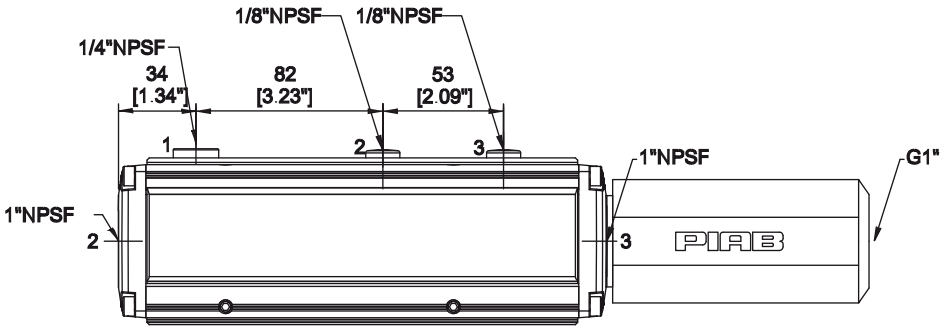

DETAIL A

DETAIL B

Standard style

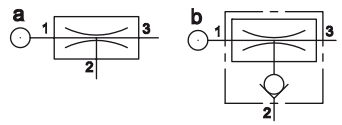

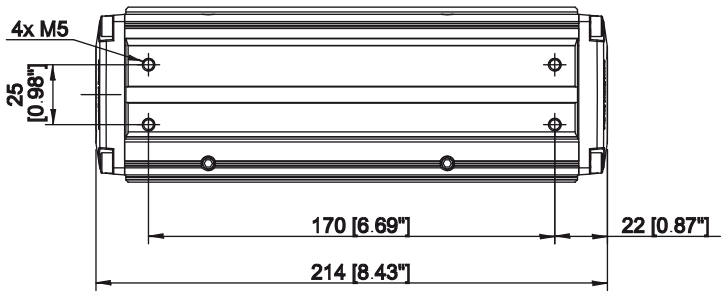

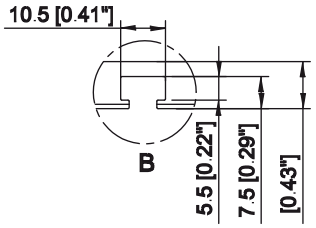

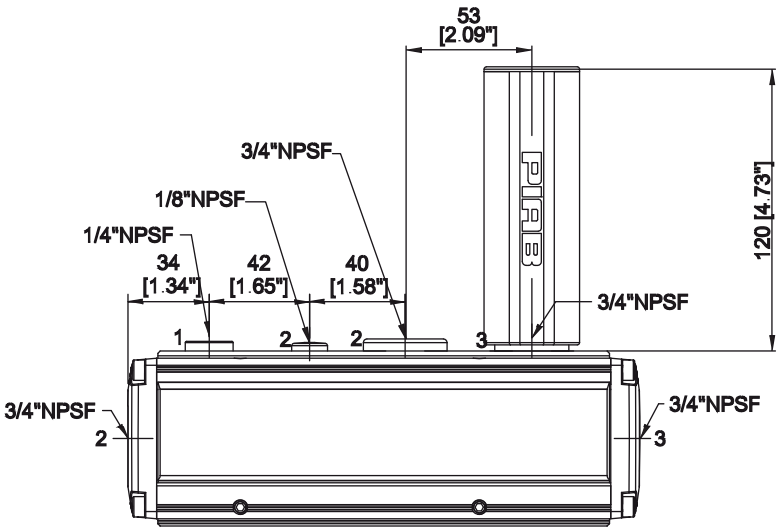

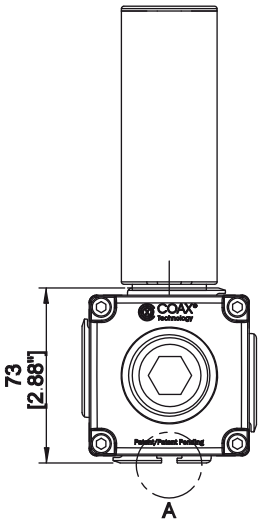

DETAIL A

DETAIL B

Classic style

ORDERING INFORMATION, ACCESSORIES

Description	PartNo
Silencer G3/4"	32.16.002
Silencer 1" NPSF	01.13.003
Manometer 250 kPa	01.12.533
Manometer 1 Mpa	01.12.532
Gauge 30-inHg/100-kPa with teflon	01.12.531
Vacuum filter, 3/4" NPT	PPSF.75-X35
Vacuum filter 1" NPT	PPSF1.0-X50
Seal kit P6010, NBR seals	01.12.495

P6010 PCC

- Patented COAX® technology with Pi48-3 or Si32-3 vacuum cartridges
- Programmable for constant vacuum level or blow-pressure level in the system
- Quick adjustment
- Easy to install in control systems
- Low power consumption, 24 VDC/120 mA
- Integrated analog vacuum sensor
- Supplied with a vacuum gauge, flow-through silencer and optional vacuum filter

TECHNICAL DATA

Description	Unit	Value
Feed pressure, max.	psi	101.5
Noise level	dBA	50-70
Temperature range	°F	37-122
Weight	lb	4.62-4.84
Material		Al, PA, NBR, SS, AISI302
Voltage, supply	VDC	24 (21.6–26.4)
Current consumption	mA	<120
Voltage signal, input/output	VDC	0–10
Scale factor signal in, vacuum	-inHg	0-27
Safety classification		IP65

The design of the PCC requires that the inlet pressure is 14.5 psi higher than the outlet pressure.

PERFORMANCE TABLES

Depending upon choice of COAX® Cartridge, applicable performance data of the P6010 PCC can be found in the tables for vacuum flow and evacuation time for models P6010 Pi48-3x1 to x4 as well as for Si32-3x1 to x4.

ORDERING INFORMATION

1. COAX® Cartridge Module	P6010 Code
COAX® Cartridge Module Si32-3x 1	AB
COAX® Cartridge Module Si32-3x 2	AC
COAX® Cartridge Module Si32-3x 3	AD
COAX® Cartridge Module Si32-3x 4	AE
COAX® Cartridge Module Pi48-3x 1	AJ
COAX® Cartridge Module Pi48-3x 2	AK
COAX® Cartridge Module Pi48-3x 3	AL
COAX® Cartridge Module Pi48-3x 4	AM

2. Mounting and cover plate	P6010 Code
Mounting T-slot	01

3. Function and cover plate	P6010 Code
Cover plate NPSF threads Function PCC	LT

4. Connections for vacuum and exhaust	P6010 Code
2x 1" NPSF with silencer 1"	56

5. Vacuum filter	P6010 Code
None	XX
Vacuum filter, 1" NPT	FA

Example	Ordering number
P6010, Si32-3x2, mounting T-slot, PCC function plate with NPSF threads, 2x 1" NPSF with silencer 1" & vacuum filter 1"	P6010.AC.01.LT.56.FA

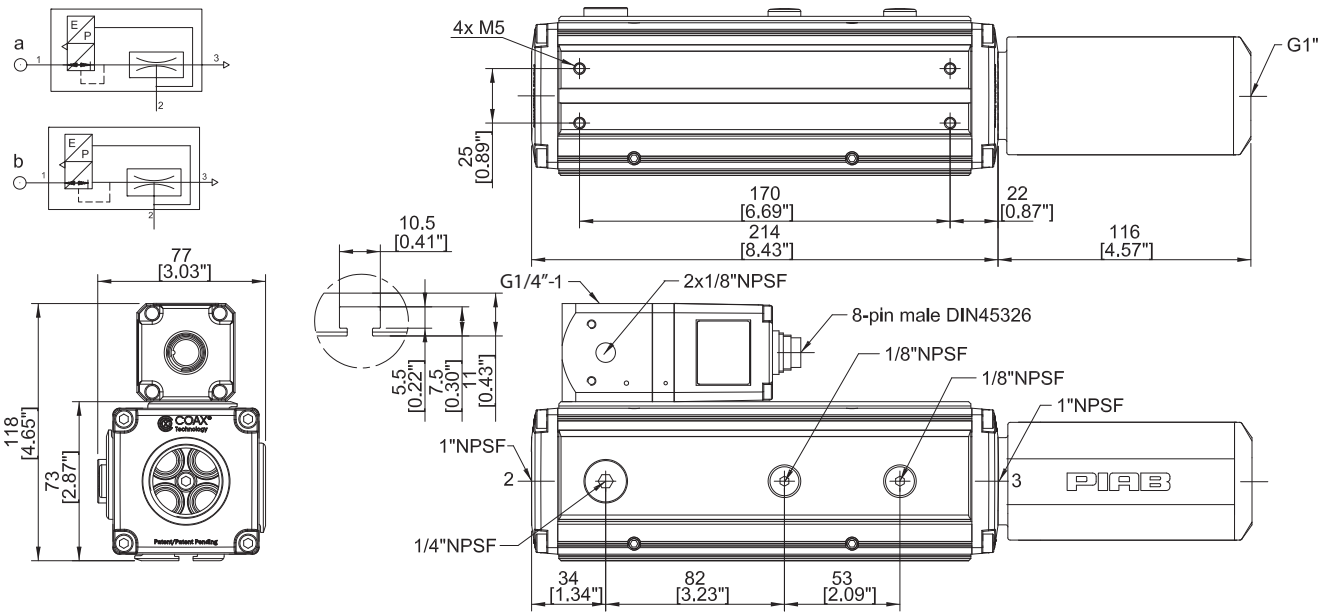

ORDERING INFORMATION, ACCESSORIES

Description	Part No.
Silencer 1" NPSF	01.13.003
3m, M16 8-pin, angled 90°	01.12.395
Cable, L=3m, M16 8-pin, straight	01.12.393
Manometer 1 Mpa	01.12.532
Gauge 30-inHg/100-kPa with teflon	01.12.531
Vacuum filter 1" NPT	PPSF1.0-X50
Seal kit P6010, NBR seals	01.12.495

P6010 AVM™

- Patented COAX® technology with Pi48-3 or Si32-3 vacuum cartridges
- Suitable for vacuum systems using numerous large suction cups
- Valves for ON/OFF of vacuum and for blow-off
- Adjustment valve for controlling the blow-off flow
- Two vacuum switches with signal output
- Automatic energy-saving function - can be switched off in applications where leakage is present
- One single M12 8-pin electric connection that facilitates installation
- PNP or NPN output selectable
- Supplied with a vacuum gauge, flow-through silencer and optional vacuum filter

TECHNICAL DATA

Description	Unit	Value
Feed pressure, max.	psi	101.5
Noise level	dBA	50-70
Material		Al, PA, NBR, SS, PMMA, ABS, TPE
Temperature range	°F	32-122
Weight	lb	4.40-4.62
Voltage	VDC	24 (22–30)
Ripple, max.	V_P	$1V_{rms}$
Current consumption	mA	110
Flow, blow-off	scfm	0-15.9
Safety classification		IP65
Current, max. output load	mA	100
Hysteresis	-inHg	1.50±0.30
Display		LED indicators

TECHNICAL DATA, SPECIFIC

Description	Unit	Value					
		LL	LM	LN	LO	LP	LQ
Function, on/off		NO	NO	NO	NC	NC	NC
Signal range	-inHg	9.0/15.0	9.0/21.0	15.0/21.0	9.0/15.0	9.0/21.0	15.0/21.0

PERFORMANCE TABLES

Depending upon choice of COAX® Cartridge, applicable performance data of the P6010 PCC can be found in the tables for vacuum flow and evacuation time for models P6010 Pi48-3x1 to x4 as well as for Si32-3x1 to x4.

ORDERING INFORMATION

1. COAX® Cartridge Module	P6010 Code
COAX® Cartridge Module Si32-3x1 with non-return valve	AF
COAX® Cartridge Module Si32-3x2 with non-return valve	AG
COAX® Cartridge Module Si32-3x3 with non-return valve	AH
COAX® Cartridge Module Si32-3x4 with non-return valve	AI
COAX® Cartridge Module Pi48-3x1 with non-return valve	AN
COAX® Cartridge Module Pi48-3x2 with non-return valve	AO
COAX® Cartridge Module Pi48-3x3 with non-return valve	AP
COAX® Cartridge Module Pi48-3x4 with non-return valve	AQ

2. Mounting and cover plate	P6010 Code
Mounting T-slot	01

3. Function and cover plate	P6010 Code
Cover Plate NPSF threads Function AVM NO 9.0/15.0	LL
Cover Plate NPSF threads Function AVM NO 9.0/21.0	LM
Cover Plate NPSF threads Function AVM NO 15.0/21.0	LN
Cover Plate NPSF threads Function AVM NC 9.0/15.0	LO
Cover Plate NPSF threads Function AVM NC 9.0/21.0	LP
Cover Plate NPSF threads Function AVM NC 15.0/21.0	LQ

NO = Normally open valve for vacuum on/off, NC = Normally closed valve for vacuum on/off

4. Connections for vacuum and exhaust	P6010 Code
2x 1" NPSF with silencer 1"	56

5. Vacuum filter	P6010 Code
None	XX
Vacuum filter, 1" NPT	FA

Example	Ordering number
P6010, Si32-3 x2, Mounting T-slot, Function AVM NO 9.0/21.0 NPSF threads, 1"NPSF with silencer & 1" vacuum filter	P6010.AG.01.LM.56.FA

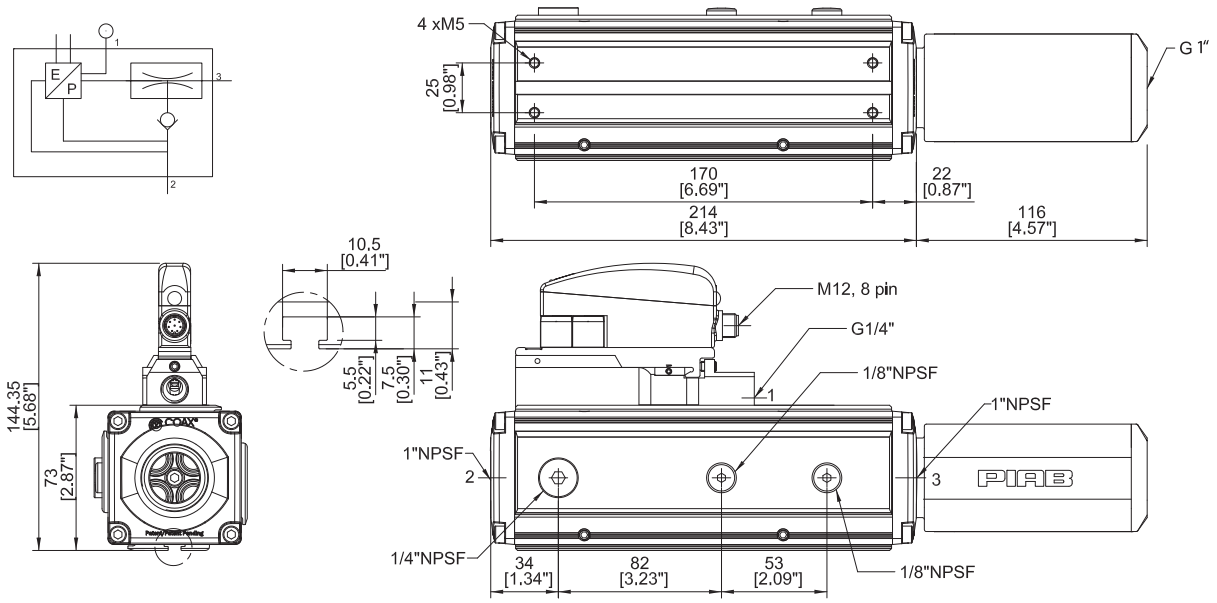

ORDERING INFORMATION, ACCESSORIES

Description	Part No.
Silencer 1" NPSF	01.13.003
Manometer 1 Mpa	01.12.532
Gauge 30-inHg/100-kPa with teflon	01.12.531
Cable 6.5 ft 0.25 x 7 PUR with electrical connector M12 8-pin	01.10.238
Vacuum filter 1" NPT	PPSF1.0-X50
Seal kit P6010, NBR seals	01.12.495

L7

- Large vacuum flows
- Small size and low weight
- Good for handling porous materials or if leakage is present
- Nitrile (NBR) seals standard

Supplied with push-in hose connector for compressed air (for pumps for connection plate A & B2). Supplied with push-in hose connector for compressed air and external flow-through silencer (for pumps for connection plate C).

TECHNICAL DATA

Description	Unit	Value
Feed pressure, optimum	psi	87
Feed pressure, max.	psi	101.5
Noise level	dBA	57–68
Temperature range	°F	-4–176
Weight	oz	1.16 (A), 2.19 (B2), 1.69 (C), 0.46 (Z)
Material		PA, POM, SS, NBR (Viton/EPDM), Al (B2 only), ABS (C only)

VACUUM FLOW

Feed pressure	Air consumption	Vacuum flow (scfm) at different vacuum levels (-inHg)										Max vacuum
psi	scfm	0	3	6	9	12	15	18	21	24	27	-inHg
87	1.04	1.53	1.04	0.61	0.53	0.42	0.34	0.21	0.14	–	–	22.3

EVACUATION TIME

Feed pressure	Air consumption	Evacuation time (s/cf) to reach different vacuum levels (-inHg)									Max vacuum
psi	scfm	3	6	9	12	15	18	21	24	27	-inHg
87	1.04	2.63	8.78	20.4	34.3	51.3	73.1	108	–	–	22.3

See page 28 for recommended hose dimensions for compressed air, vacuum & exhaust connections.

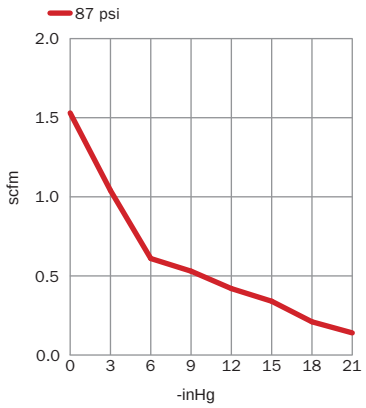

Vacuum flow

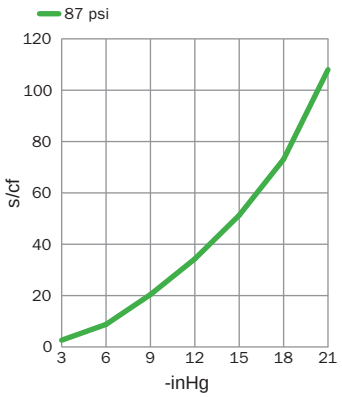

Evacuation time

ORDERING INFORMATION

	Description	Part No.
A	Vacuum pump MINI L7, conn. A, NBR seals	L7A6-AN
A	Vacuum pump MINI L7, conn. A, NBR seals, non-return valve	L7A6-ANA
B	Vacuum pump MINI L7, conn. B2, NBR seals	L7A6-B2N
B	Vacuum pump MINI L7, conn. B2, NBR seals, non-return valve	L7A6-B2NA
C	Vacuum pump MINI L7, conn. C, NBR seals	L7A6-CN
C	Vacuum pump MINI L7, conn. C, NBR seals, non-return valve	L7A6-CNA
D	Vacuum pump MINI L7, conn. Z, NBR seals	L7A6-ZN
D	Vacuum pump MINI L7, conn. Z NBR seals, non-return valve	L7A6-ZNA

Viton® or EPDM seals optional (i.e. Part No. L7A6-AV or L7A6-AE)

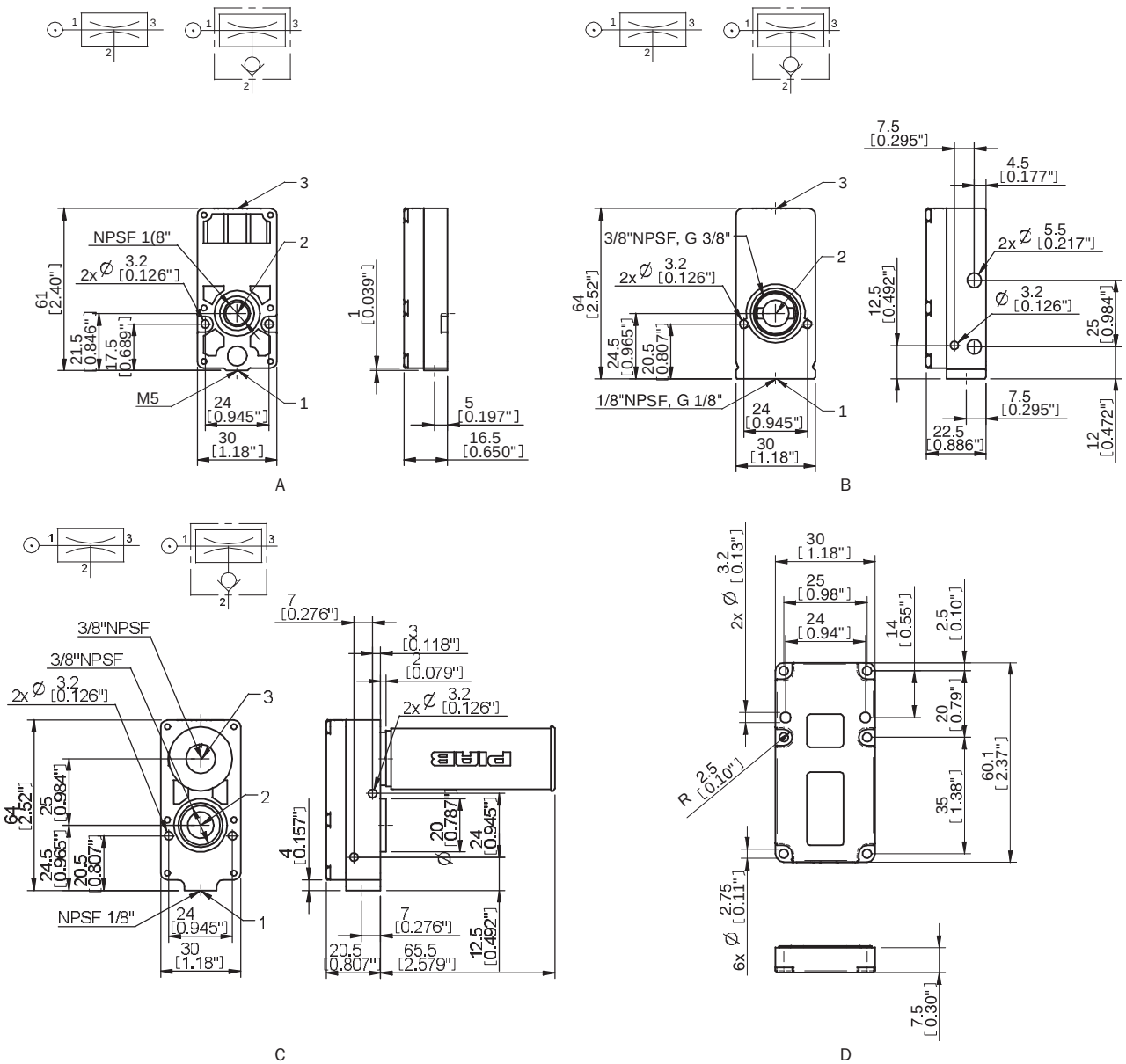

ORDERING INFORMATION, ACCESSORIES

Description	Part No.
Seal kit MINI 5–28, NBR	32.01.097
Seal kit MINI 5–28, Viton®	32.01.097V
Seal kit MINI 5–28, EPDM	32.01.097E

Seal kits include flap valves, gaskets and compressed-air filters.

L14

- Large vacuum flows
- Small size and low weight
- Good for handling porous materials or if leakage is present
- Nitrile (NBR) seals standard

Supplied with push-in hose connector for compressed air (for pumps with connection plate B2). Supplied with push-in hose connector for compressed air and external flow-through silencer (for pumps with connection plate C & T).

TECHNICAL DATA

Description	Unit	Value
Feed pressure, optimum	psi	87
Feed pressure, max.	psi	101.5
Noise level	dBA	57–68
Temperature range	°F	-4–176
Weight	oz	2.19 (B2), 1.69 (C), 8.10 (T), 0.46 (Z)
Material		PA, POM, SS, NBR (Viton/EPDM), Al (B2 only), ABS (C only)

VACUUM FLOW

Feed pressure	Air consumption	Vacuum flow (scfm) at different vacuum levels (-inHg)										Max vacuum
psi	scfm	0	3	6	9	12	15	18	21	24	27	-inHg
87	2.08	3.11	2.20	1.21	0.95	0.83	0.68	0.51	0.28	–	–	22.3

EVACUATION TIME

Feed pressure	Air consumption	Evacuation time (s/cf) to reach different vacuum levels (-inHg)									Max vacuum
psi	scfm	3	6	9	12	15	18	21	24	27	-inHg
87	2.08	1.81	4.82	10.2	16.7	24.9	36.3	52.4	–	–	22.3

See page 28 for recommended hose dimensions for compressed air, vacuum & exhaust connections.

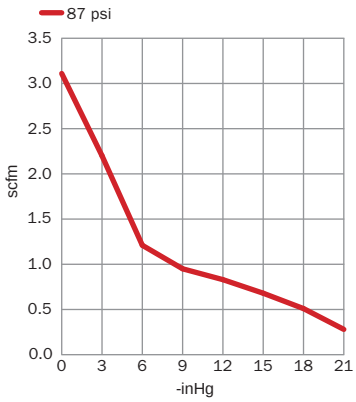

Vacuum flow

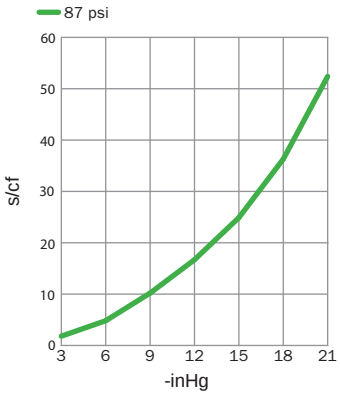

Evacuation time

ORDERING INFORMATION

	Description	Part No.
A	Vacuum pump MINI L14, conn. B2, NBR seals	L14A6-B2N
A	Vacuum pump MINI L14, conn. B2, NBR seals, non-return valve	L14A6-B2NA
B	Vacuum pump MINI L14, conn. C, NBR seals	L14A6-CN
B	Vacuum pump MINI L14, conn. C, NBR seals, non-return valve	L14A6-CNA
C	Vacuum pump MINI L14, conn. T, NBR seals	L14F6-TN
C	Vacuum pump MINI L14, conn. T, NBR seals, non-return valve	L14F6-TNA
D	Vacuum pump MINI L14, conn. Z, NBR seals	L14A6-ZN
D	Vacuum pump MINI L14, conn. Z, NBR seals, non-return valve	L14A6-ZNA

Viton® or EPDM seals optional (i.e. Part No. L14A6-B2V or L14A6-B2E)

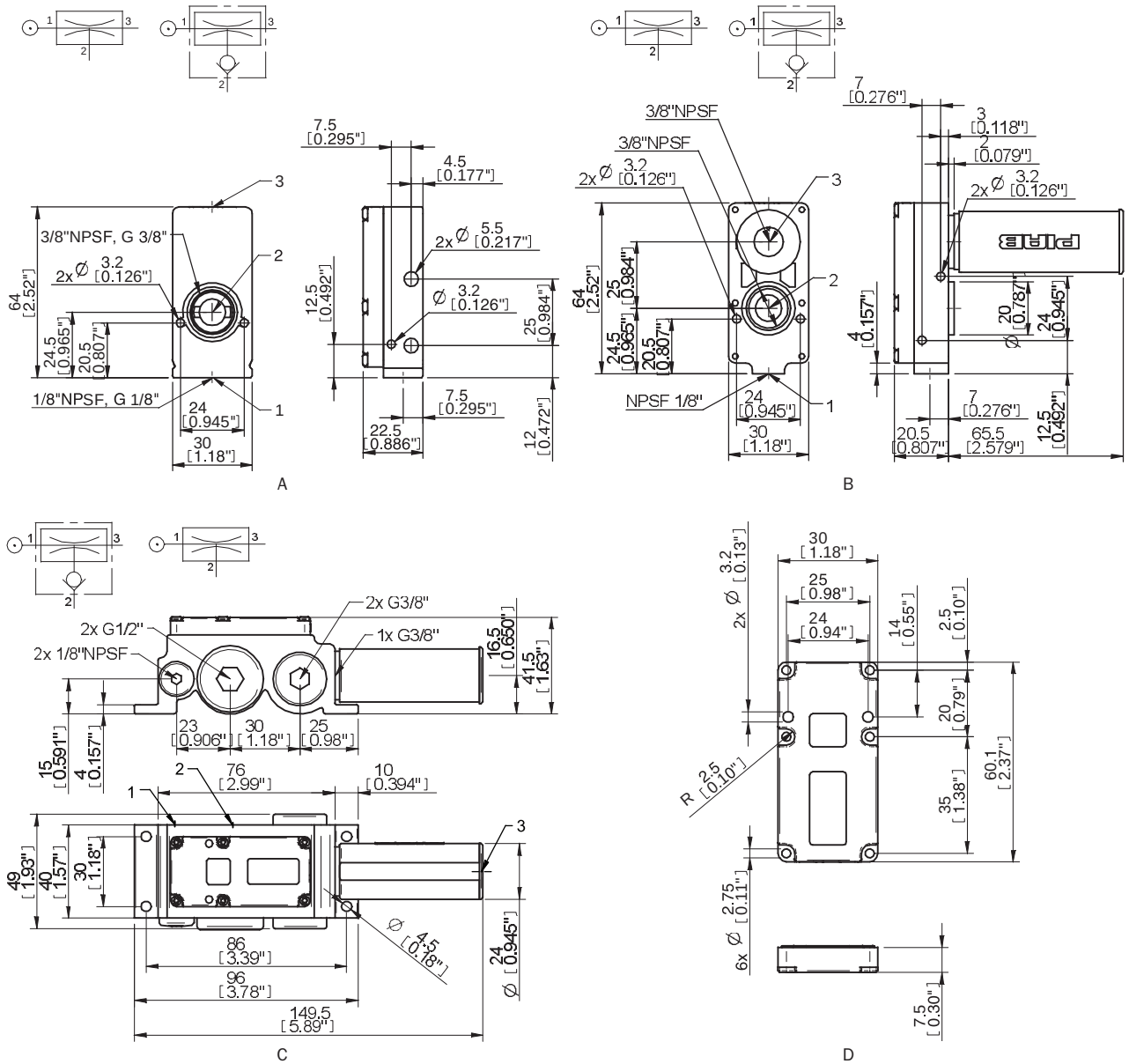

ORDERING INFORMATION, ACCESSORIES

Description	Part No.
Seal kit MINI 5–28, NBR	32.01.097
Seal kit MINI 5–28, Viton®	32.01.097V
Seal kit MINI 5–28, EPDM	32.01.097E

Seal kits include flap valves, gaskets and compressed-air filters.

L28

- Large vacuum flows
- Small size and low weight
- Good for handling porous materials or if leakage is present
- Nitrile (NBR) seals standard

Supplied with push-in hose connector for compressed air (for pumps with connection plate B2). Supplied with push-in hose connector for compressed air and external flow-through silencer (for pumps with connection plate C & T).

TECHNICAL DATA

Description	Unit	Value
Feed pressure, optimum	psi	87
Feed pressure, max.	psi	101.5
Noise level	dBA	57–68
Temperature range	°F	-4–176
Weight	oz	2.68 (B2), 2.12 (C), 8.40 (T)
Material		PA, POM, SS, NBR (Viton/EPDM), Al (B2 only), ABS (C only)

VACUUM FLOW

Feed pressure	Air consumption	Vacuum flow (scfm) at different vacuum levels (-inHg)										Max vacuum
psi	scfm	0	3	6	9	12	15	18	21	24	27	-inHg
87	4.17	5.40	3.54	2.22	1.89	1.57	1.17	0.76	0.36	–	–	22.3

EVACUATION TIME

Feed pressure	Air consumption	Evacuation time (s/cf) to reach different vacuum levels (-inHg)									Max vacuum
psi	scfm	3	6	9	12	15	18	21	24	27	-inHg
87	4.17	1.33	3.12	5.67	9.07	13.0	19.5	31.4	–	–	22.3

See page 28 for recommended hose dimensions for compressed air, vacuum & exhaust connections.

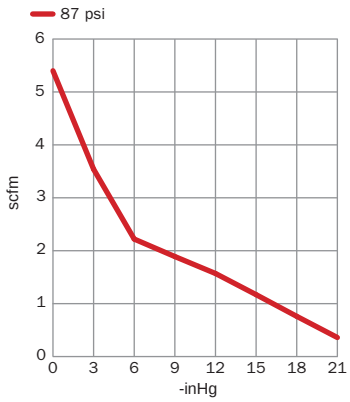

Vacuum flow

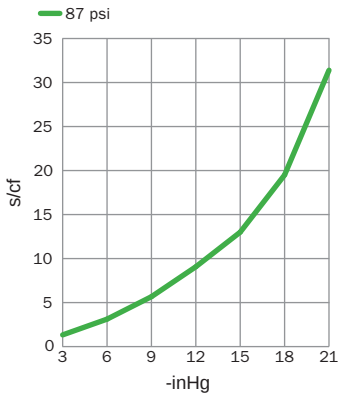

Evacuation time

ORDERING INFORMATION

	Description	Part No.
A	Vacuum pump MINI L28, conn. B2, NBR seals	L28A6-B2N
A	Vacuum pump MINI L28, conn. B2, NBR seals, non-return valve	L28A6-B2NA
B	Vacuum pump MINI L28, conn. C, NBR seals	L28A6-CN
B	Vacuum pump MINI L28, conn. C, NBR seals, non-return valve	L28A6-CNA
C	Vacuum pump MINI L28, conn. T, NBR seals	L28F6-TN
C	Vacuum pump MINI L28, conn. T, NBR seals, non-return valve	L28F6-TNA

Viton® or EPDM seals optional (i.e. Part No. L28A6-B2E or L28A6-B2V)

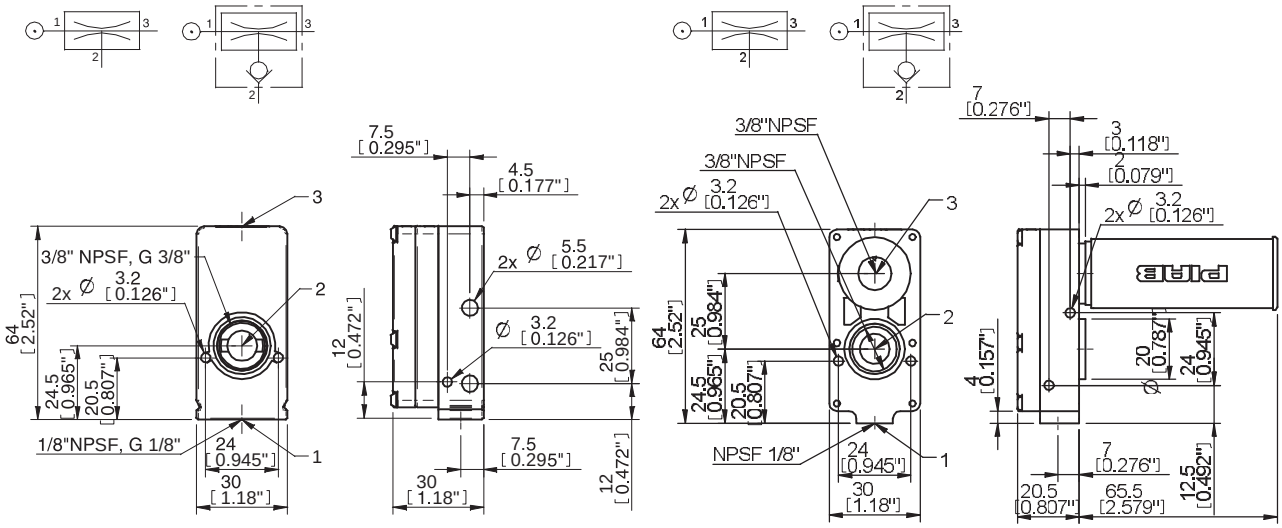

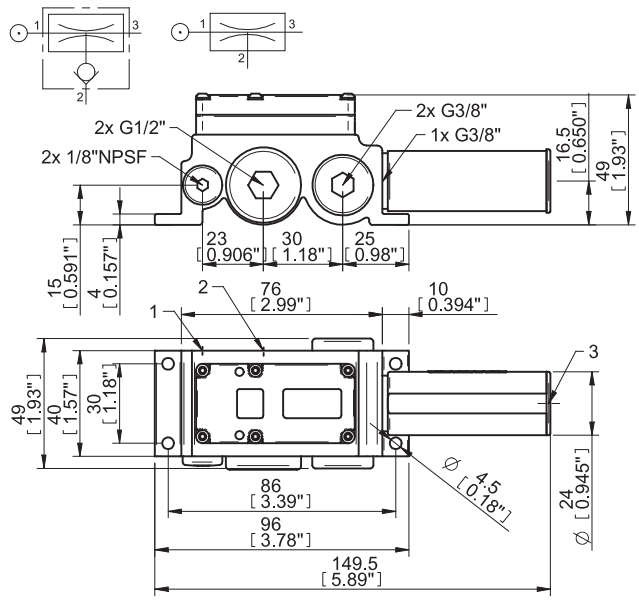

ORDERING INFORMATION, ACCESSORIES

Description	Part No.
Seal kit MINI 5–28, NBR	32.01.097
Seal kit MINI 5–28, Viton®	32.01.097V
Seal kit MINI 5–28, EPDM	32.01.097E

Seal kits include flap valves, gaskets and compressed-air filters.

L56

- Large vacuum flows
- Small size and low weight
- Good for handling porous materials or if leakage is present
- Nitrile (NBR) seals standard

Supplied with two flow-through silencers.

TECHNICAL DATA

Description	Unit	Value
Feed pressure, optimum	psi	87
Feed pressure, max.	psi	101.5
Noise level	dBA	57–68
Temperature range	°F	-4–176
Weight	oz	14.9
Material		Al, PA, POM, ABS, SS, NBR (Viton, EPDM)

VACUUM FLOW

Feed pressure	Air consumption	Vacuum flow (scfm) at different vacuum levels (-inHg)										Max vacuum
psi	scfm	0	3	6	9	12	15	18	21	24	27	-inHg
87	8.48	10.8	7.42	4.24	3.60	2.97	2.33	1.72	0.91	–	–	22.3

EVACUATION TIME

Feed pressure	Air consumption	Evacuation time (s/cf) to reach different vacuum levels (-inHg)									Max vacuum
psi	scfm	3	6	9	12	15	18	21	24	27	-inHg
87	8.48	0.65	1.50	2.83	4.53	6.52	9.35	14.2	–	–	22.3

See page 28 for recommended hose dimensions for compressed air, vacuum & exhaust connections.

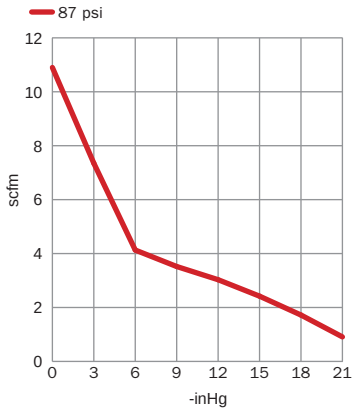

Vacuum flow

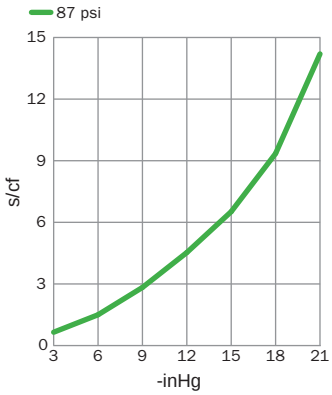

Evacuation time

ORDERING INFORMATION

Description	Part No.
Vacuum pump MINI L56, conn. K, NBR seals	L56F6-KN
Vacuum pump MINI L56, conn. K, NBR seals, non-return valve	L56F6-KNA

Viton® or EPDM seals optional (i.e. Part No. L56F6-KV or L56F6-KE)

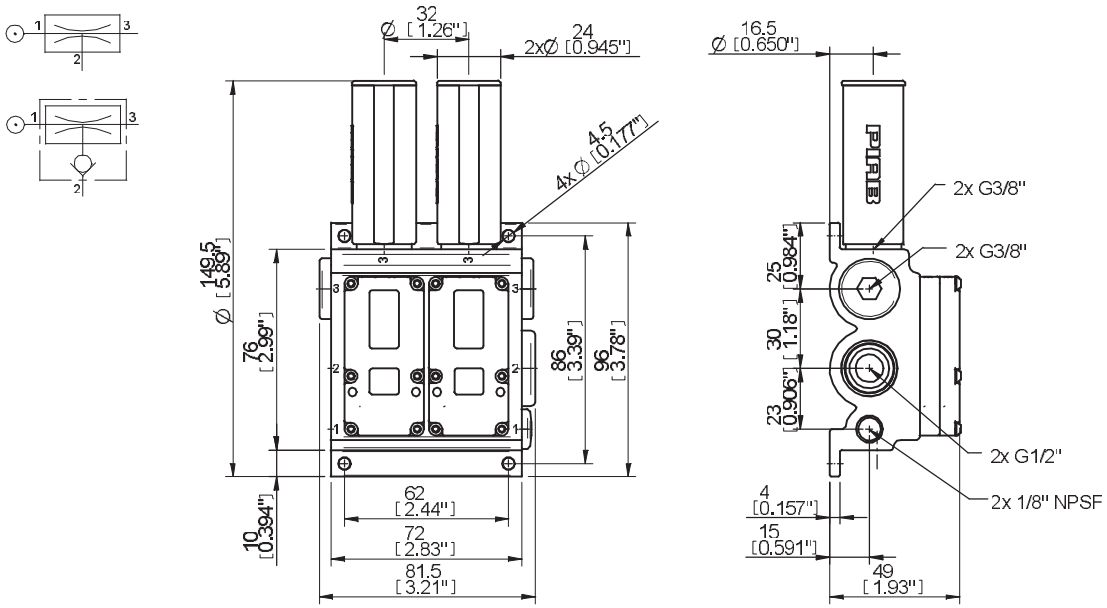

ORDERING INFORMATION, ACCESSORIES

Description	Part No.
Seal kit MINI 30–60, NBR seals	01.00.491
Seal kit MINI 30–60, Viton® seals	01.00.491V
Seal kit MINI 30–60, EPDM seals	01.00.491E

Seal kits include flap valves, gaskets and compressed air filters.

M5L

- Medium vacuum levels to 24.1 -inHg
- Small size and low weight
- Operates at 55 psi
- Nitrile (NBR) seals standard

Supplied with push-in hose connector for compressed air (for pumps for connection plate A & B2). Supplied with push-in hose connector for compressed air and external flow-through silencer (for pumps for connection plate C).

TECHNICAL DATA

Description	Unit	Value
Feed pressure, optimum	psi	55
Feed pressure, max.	psi	101.5
Noise level	dBA	57–68
Temperature range	°F	-4–176
Weight	oz	1.16 (A), 2.19 (B2), 1.69 (C), 0.46 (Z)
Material		PA, POM, SS, NBR (Viton/EPDM), Al (B2 only), ABS (C only)

VACUUM FLOW

Feed pressure	Air consumption	Vacuum flow (scfm) at different vacuum levels (-inHg)										Max vacuum
psi	scfm	0	3	6	9	12	15	18	21	24	27	-inHg
55	0.81	1.23	0.64	0.47	0.38	0.30	0.21	0.17	0.08	0.02	–	24.1

EVACUATION TIME

Feed pressure	Air consumption	Evacuation time (s/cf) to reach different vacuum levels (-inHg)									Max vacuum
psi	scfm	3	6	9	12	15	18	21	24	27	-inHg
55	0.81	5.67	17.3	33.1	51.0	73.7	108	167	314	–	24.1

See page 28 for recommended hose dimensions for compressed air, vacuum & exhaust connections.

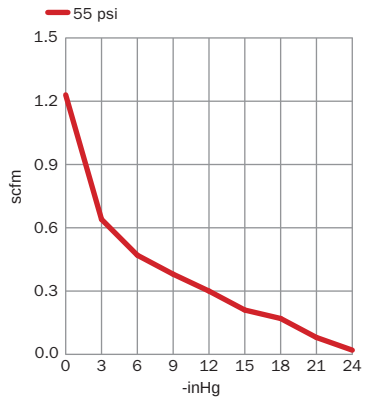

Vacuum flow

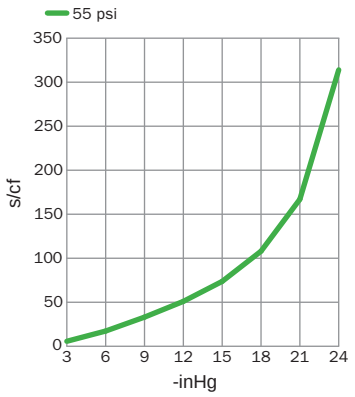

Evacuation time

ORDERING INFORMATION

	Description	Part No.
A	Vacuum pump MINI M5L, conn. A, NBR seals	M5A5-AN
A	Vacuum pump MINI M5L, conn. A, NBR seals, non-return valve	M5A5-ANA
B	Vacuum pump MINI M5L, conn. B2, NBR seals	M5A5-B2N
B	Vacuum pump MINI M5L, conn. B2, NBR seals, non-return valve	M5A5-B2NA
C	Vacuum pump MINI M5L, conn. C, NBR seals	M5A5-CN
C	Vacuum pump MINI M5L, conn. C, NBR seals, non-return valve	M5A5-CNA
D	Vacuum pump MINI M5L, conn. Z, NBR seals	M5A5-ZN
D	Vacuum pump MINI M5L, conn. Z, NBR seals, non-return valve	M5Z5-ZNA

Viton® or EPDM seals optional (i.e. Part No. M5A5-AV or M5A5-AE)

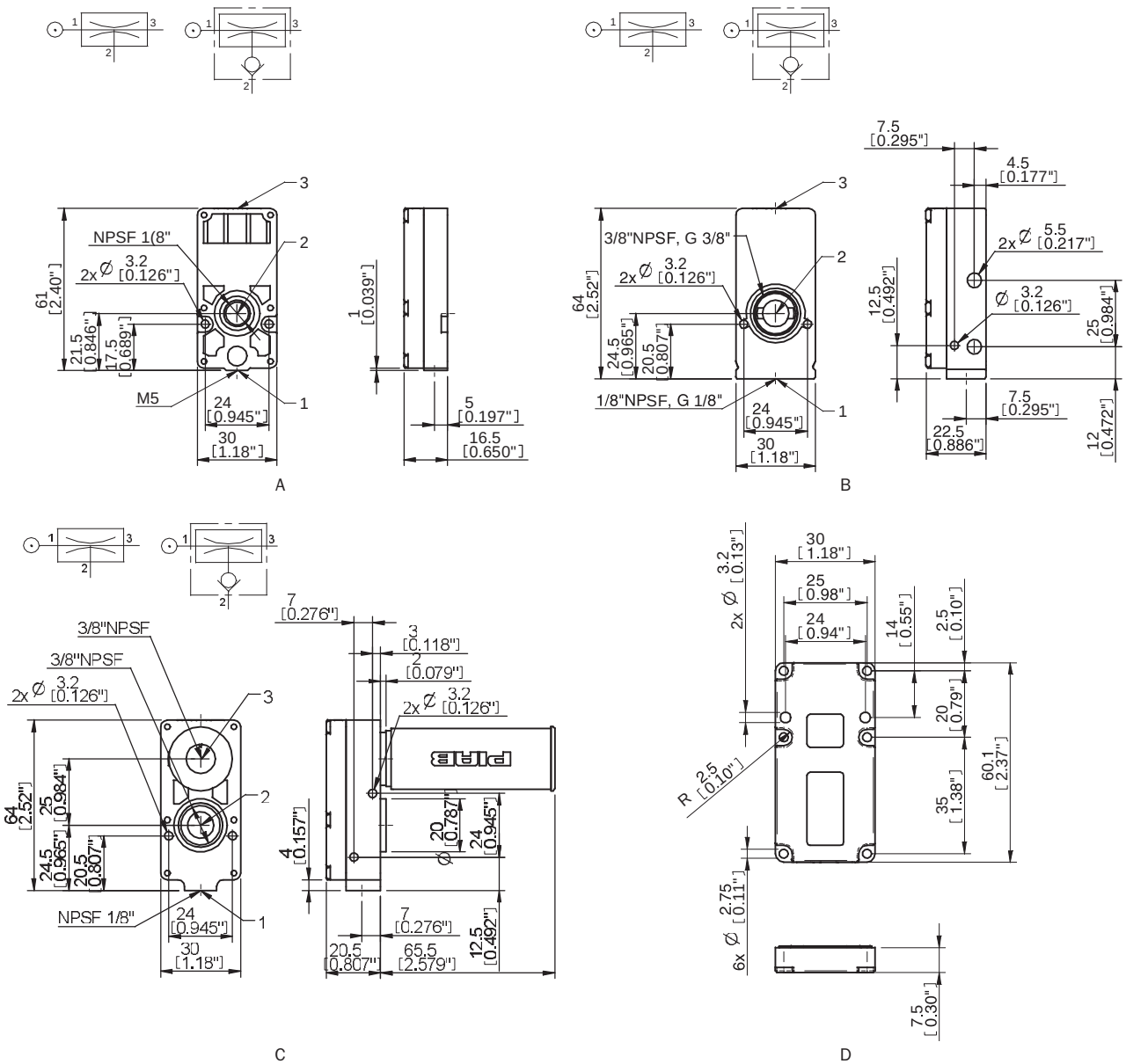

ORDERING INFORMATION, ACCESSORIES

Description	Part No.
Seal kit MINI 5–28, NBR	32.01.097
Seal kit MINI 5–28, Viton®	32.01.097V
Seal kit MINI 5–28, EPDM	32.01.097E

Seal kits include flap valves, gaskets and compressed-air filters.

M10L

- Medium vacuum levels to 24.1 -inHg
- Small size and low weight
- Operates at 55 psi
- Nitrile (NBR) seals standard

Supplied with push-in hose connector for compressed air (for pumps for connection plate A & B2). Supplied with push-in hose connector for compressed air and external flow-through silencer (for pumps for connection plate C).

TECHNICAL DATA

Description	Unit	Value
Feed pressure, optimum	psi	55
Feed pressure, max.	psi	101.5
Noise level	dBA	57–68
Temperature range	°F	-4-176
Weight	oz	1.16 (A), 2.19 (B2), 1.69 (C), 0.46 (Z)
Material		PA, POM, SS, NBR (Viton/EPDM), Al (B2 only), ABS (C only)

VACUUM FLOW

Feed pressure	Air consumption	Vacuum flow (scfm) at different vacuum levels (-inHg)										Max vacuum
psi	scfm	0	3	6	9	12	15	18	21	24	27	-inHg
55	1.61	2.33	1.21	0.83	0.74	0.64	0.44	0.25	0.13	0.04	–	24.1

EVACUATION TIME

Feed pressure	Air consumption	Evacuation time (s/cf) to reach different vacuum levels (-inHg)									Max vacuum
psi	scfm	3	6	9	12	15	18	21	24	27	-inHg
55	1.61	3.68	8.78	16.1	25.5	36.8	56.7	90.7	201	–	24.1

See page 28 for recommended hose dimensions for compressed air, vacuum & exhaust connections.

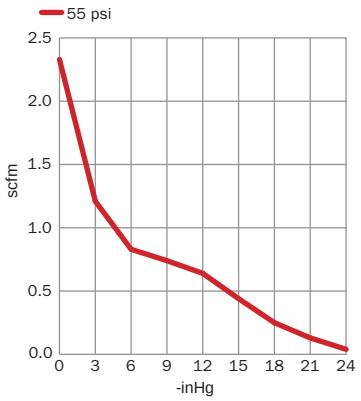

Vacuum flow

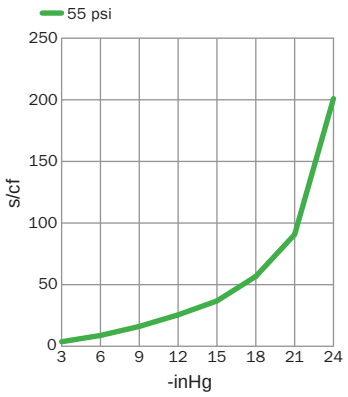

Evacuation time

ORDERING INFORMATION

	Description	Part No.
A	Vacuum pump MINI M10L, conn. A, NBR seals	M10A5-AN
A	Vacuum pump MINI M10L, conn. A, NBR seals, non-return valve	M10A5-ANA
B	Vacuum pump MINI M10L, conn. B2, NBR seals	M10A5-B2N
B	Vacuum pump MINI M10L, conn. B2, NBR seals, non-return valve	M10A5-B2NA
C	Vacuum pump MINI M10L, conn. C, NBR seals	M10A5-CN
C	Vacuum pump MINI M10L, conn. C, NBR seals, non-return valve	M10A5-CNA
D	Vacuum pump MINI M10L, conn. Z, NBR seals	M10A5-ZN
D	Vacuum pump MINI M10L, conn. Z, NBR seals, non-return valve	M10A5-ZNA

Viton® or EPDM seals optional (i.e. Part No. M10A5-AV or M10A5-AE)

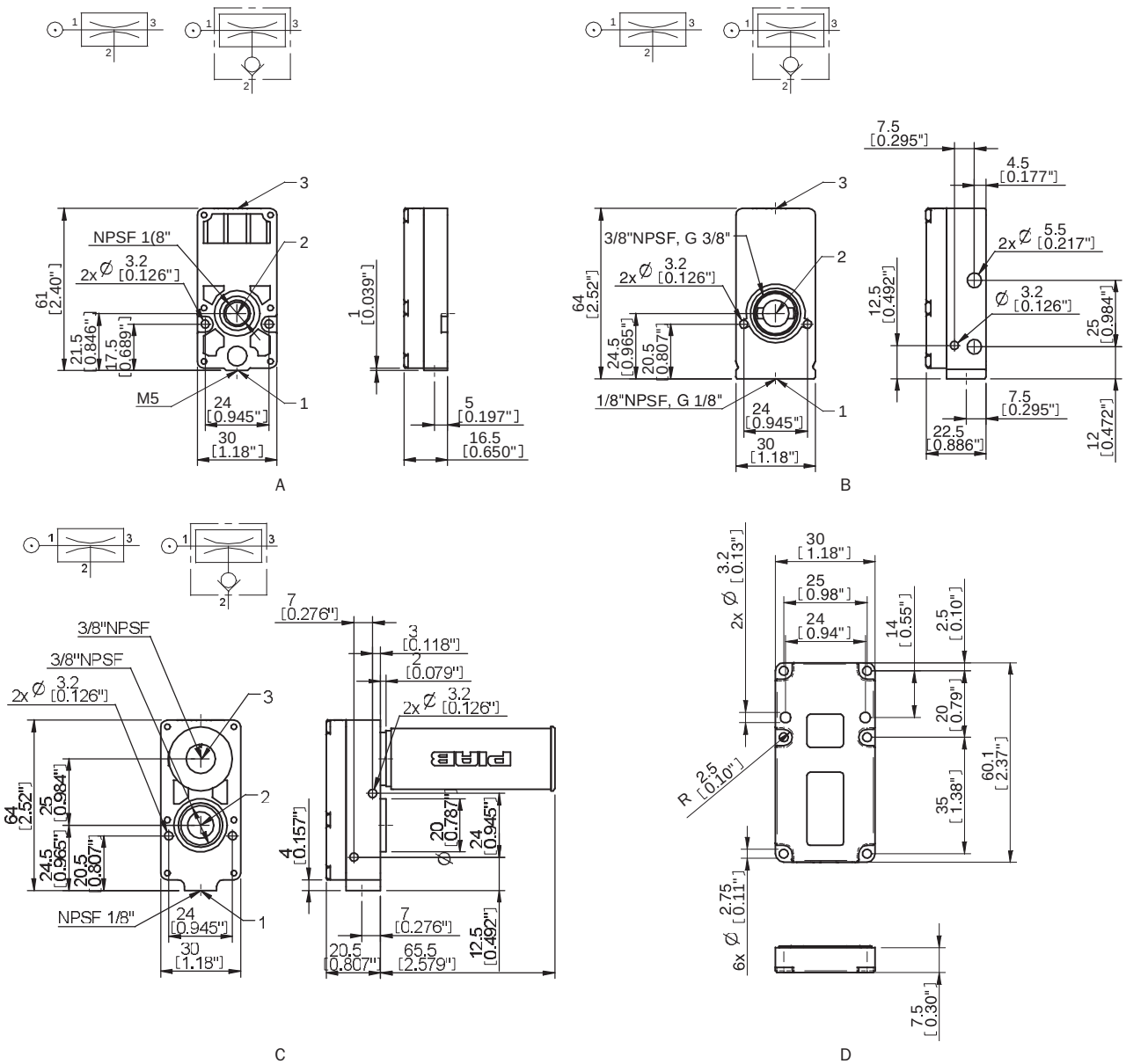

ORDERING INFORMATION, ACCESSORIES

Description	Part No.
Seal kit MINI 5–28, NBR	32.01.097
Seal kit MINI 5–28, Viton®	32.01.097V
Seal kit MINI 5–28, EPDM	32.01.097E

Seal kits include flap valves, gaskets and compressed-air filters.

M20L

- Medium vacuum levels to 24.1 -inHg
- Small size and low weight
- Operates at 55 psi
- Nitrile (NBR) seals standard

Supplied with push-in hose connector for compressed air (for pumps with connection plate B2). Supplied with push-in hose connector for compressed air and external flow-through silencer (for pumps with connection plate C & T).

TECHNICAL DATA

Description	Unit	Value
Feed pressure, optimum	psi	55
Feed pressure, max.	psi	101.5
Noise level	dBA	57–68
Temperature range	°F	-4-176
Weight	oz	2.68 (B2), 2.12 (C), 8.40 (T)
Material		PA, POM, SS, NBR (Viton/EPDM), Al (B2 only), ABS (C only)

VACUUM FLOW

Feed pressure	Air consumption	Vacuum flow (scfm) at different vacuum levels (-inHg)										Max vacuum
psi	scfm	0	3	6	9	12	15	18	21	24	27	-inHg
55	3.18	4.24	2.54	1.61	1.42	1.12	0.87	0.70	0.40	0.04	–	24.1

EVACUATION TIME

Feed pressure	Air consumption	Evacuation time (s/cf) to reach different vacuum levels (-inHg)									Max vacuum
psi	scfm	3	6	9	12	15	18	21	24	27	-inHg
55	3.18	1.47	3.97	7.37	11.9	18.1	28.3	48.2	105	–	24.1

See page 28 for recommended hose dimensions for compressed air, vacuum & exhaust connections.

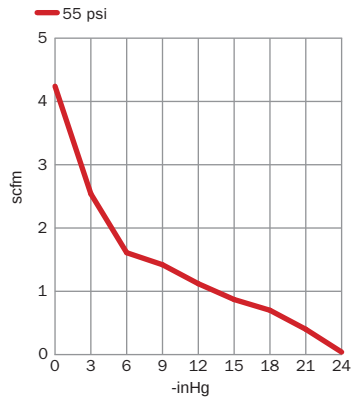

Vacuum flow

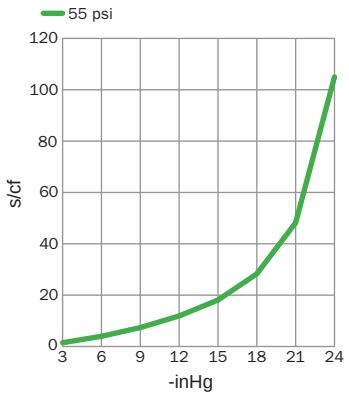

Evacuation time

ORDERING INFORMATION

	Description	Part No.
A	Vacuum pump MINI M20L, conn. B2, NBR seals	M20A5-B2N
A	Vacuum pump MINI M20L, conn. B2, NBR seals, non-return valve	M20A5-B2NA
B	Vacuum pump MINI M20L, conn. C, NBR seals	M20A5-CN
B	Vacuum pump MINI M20L, conn. C, NBR seals, non-return valve	M20A5-CNA
C	Vacuum pump MINI M20L, conn. B, NBR sealings	M20A5-BN
C	Vacuum pump MINI M20L, conn. B, NBR sealings, non-return valve	M20A5-BNA

Viton® or EPDM seals optional (i.e. Part No. M20A5-B2V or M20A5-B2E)

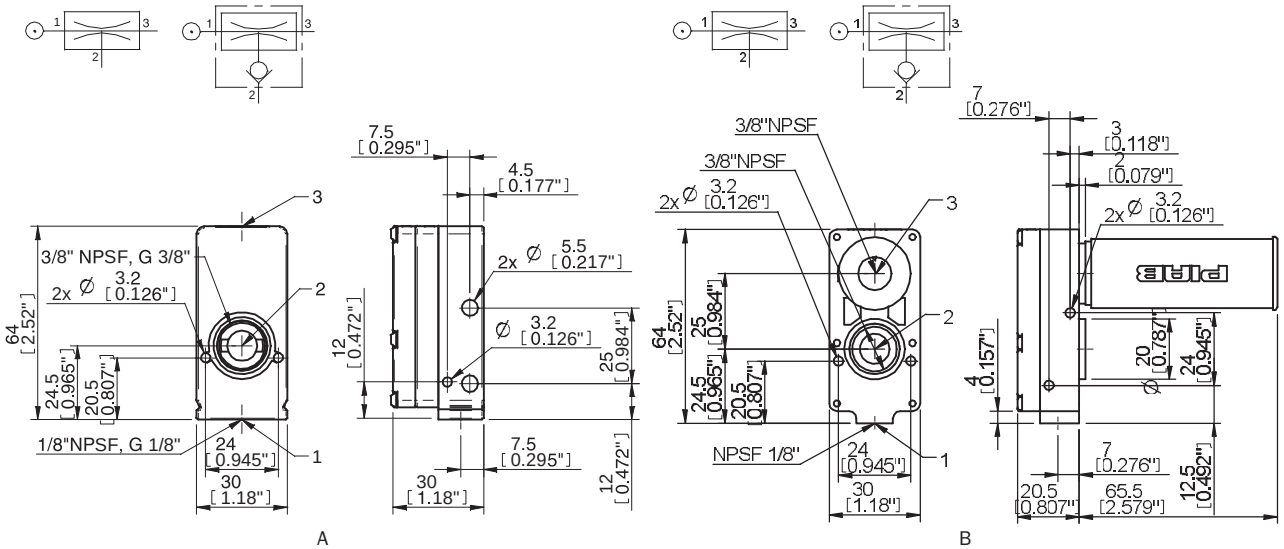

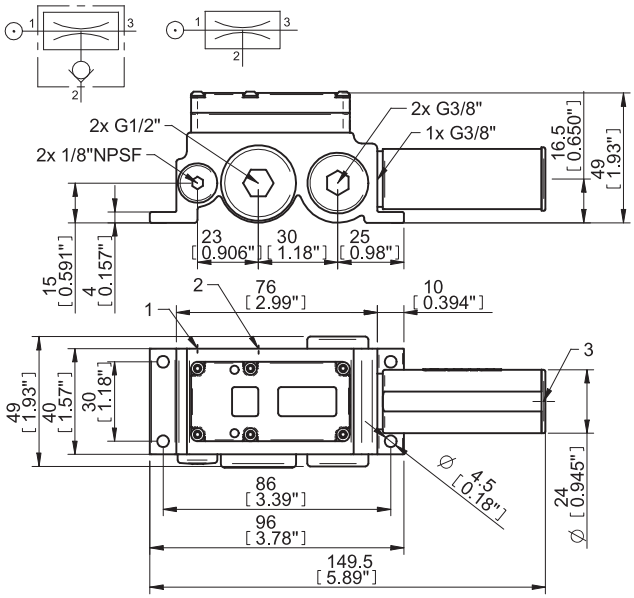

ORDERING INFORMATION, ACCESSORIES

Description	Part No.
Seal kit MINI 5–28, NBR	32.01.097
Seal kit MINI 5–28, Viton®	32.01.097V
Seal kit MINI 5–28, EPDM	32.01.097E

Seal kits include flap valves, gaskets and compressed-air filters.

M40L

- Medium vacuum levels to 24.1 -inHg
- Small size and low weight
- Operates at 55 psi
- Nitrile (NBR) seals standard

Supplied with two flow-through silencers.

TECHNICAL DATA

Description	Unit	Value
Feed pressure, optimum	psi	55
Feed pressure, max.	psi	101.5
Noise level	dBA	57–68
Temperature range	°F	-4-176
Weight	oz	14.9
Material		Al, PA, POM, NBR (Viton/EPDM), ABS, SS

VACUUM FLOW

Feed pressure	Air consumption	Vacuum flow (scfm) at different vacuum levels (-inHg)										Max vacuum
psi	scfm	0	3	6	9	12	15	18	21	24	27	-inHg
55	6.36	8.48	4.66	2.97	2.54	2.12	1.50	0.91	0.40	0.11	–	24.1

EVACUATION TIME

Feed pressure	Air consumption	Evacuation time (s/cf) to reach different vacuum levels (-inHg)									Max vacuum
psi	scfm	3	6	9	12	15	18	21	24	27	-inHg
55	6.36	0.85	2.10	3.68	5.95	9.07	14.2	26.9	45.3	–	24.1

See page 28 for recommended hose dimensions for compressed air, vacuum & exhaust connections.

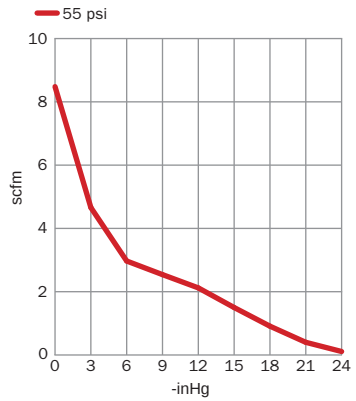

Vacuum flow

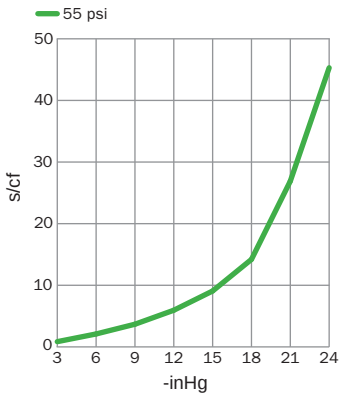

Evacuation time

ORDERING INFORMATION

Description	Part No.
Vacuum pump MINI M40L, conn. K, NBR seals	M40F5-KN
Vacuum pump MINI M40L, conn. K, NBR seals, non-return valve	M40F5-KNA

Viton® or EPDM optional (i.e. Part No. M40F5-KV or M40F5-KE)

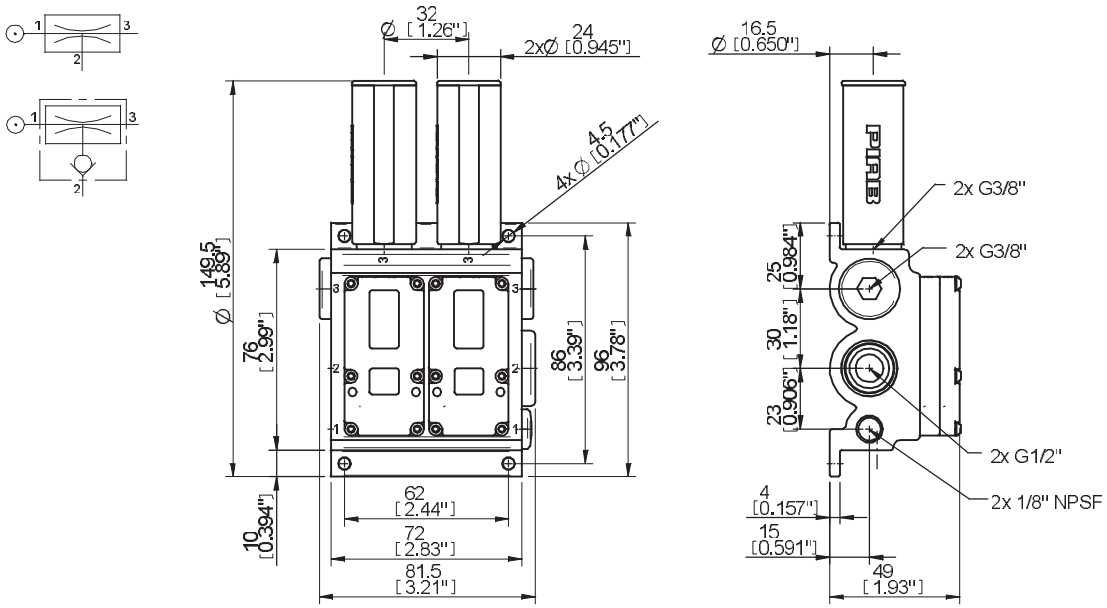

ORDERING INFORMATION, ACCESSORIES

Description	Part No.
Seal kit MINI 30–60, NBR seals	01.00.491
Seal kit MINI 30–60, Viton® seals	01.00.491V
Seal kit MINI 30–60, EPDM seals	01.00.491E

Seal kits include flap valves, gaskets and compressed air filters.

X5L

- Extra vacuum level to 27.9 -inHg
- Small size and low weight
- Use in tightly sealed or non-porous applications

Supplied with push-in hose connector for compressed air (for pumps for connection plate A & B2). Supplied with push-in hose connector for compressed air and external flow-through silencer (for pumps for connection plate C).

TECHNICAL DATA

Description	Unit	Value
Feed pressure, optimum	psi	58
Feed pressure, max.	psi	101.5
Noise level	dBA	62–66
Temperature range	°F	-4-176
Weight	oz	1.16 (A), 2.19 (B2), 1.69 (C), 0.46 (Z)
Material		PA, POM, SS, NBR (Viton/EPDM), Al (B2 only), ABS (C only)

VACUUM FLOW

Feed pressure	Air consumption	Vacuum flow (scfm) at different vacuum levels (-inHg)										Max vacuum
psi	scfm	0	3	6	9	12	15	18	21	24	27	-inHg
58	0.83	1.02	0.51	0.25	0.23	0.21	0.18	0.15	0.12	0.06	0.01	27.9

EVACUATION TIME

Feed pressure	Air consumption	Evacuation time (s/cf) to reach different vacuum levels (-inHg)									Max vacuum
psi	scfm	3	6	9	12	15	18	21	24	27	-inHg
58	0.83	4.82	23.2	48.2	76.5	110	153	210	300	637	27.9

See page 28 for recommended hose dimensions for compressed air, vacuum & exhaust connections.

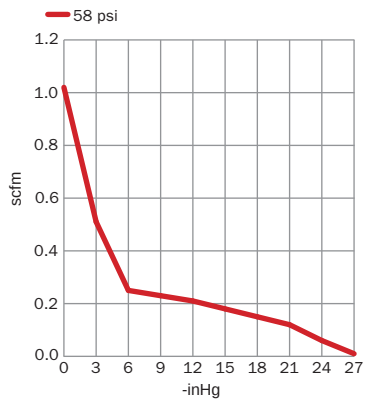

Vacuum flow

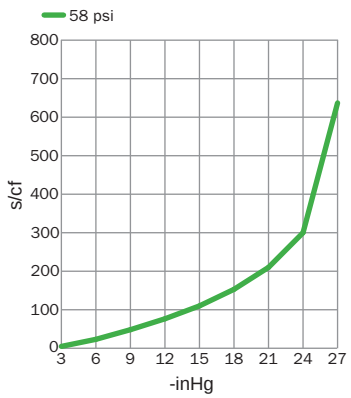

Evacuation time

ORDERING INFORMATION

	Description	Part No.
A	Vacuum pump MINI X5L, conn. A, NBR seals	X5A5-AN
A	Vacuum pump MINI X5L, conn. A, NBR seals, non-return valve	X5A5-ANA
B	Vacuum pump MINI X5L, conn. B2, NBR seals	X5A5-B2N
B	Vacuum pump MINI X5L, conn. B2, NBR seals, non-return valve	X5A5-B2NA
C	Vacuum pump MINI X5L, conn. C, NBR seals	X5A5-CN
C	Vacuum pump MINI X5L, conn. C, NBR seals, non-return valve	X5A5-CNA
D	Vacuum pump MINI X5L, conn. Z, NBR seals	X5A5-ZN
D	Vacuum pump MINI X5L, conn. Z, NBR seals, non-return valve	X5A5-ZNA

Viton® or EPDM seals optional (i.e. Part No. X5A5-AV or X5A5-AE)

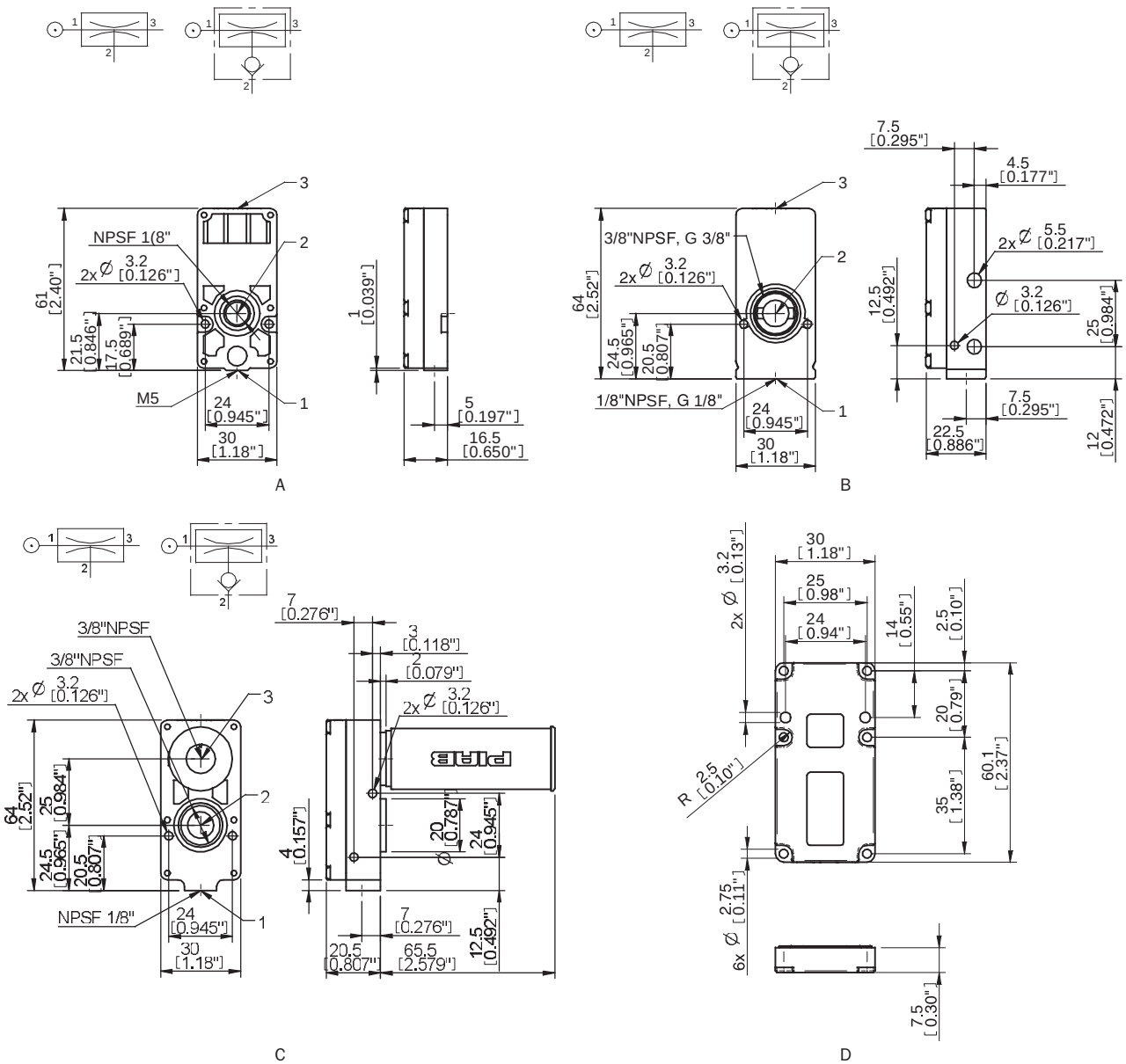

ORDERING INFORMATION, ACCESSORIES

Description	Part No.
Seal kit MINI 5–28, NBR	32.01.097
Seal kit MINI 5–28, Viton®	32.01.097V
Seal kit MINI 5–28, EPDM	32.01.097E

Seal kits include flap valves, gaskets and compressed-air filters.

X10L

- Extra vacuum level to 27.9 -inHg
- Small size and low weight
- Use in tightly sealed or non-porous applications

Supplied with push-in hose connector for compressed air (for pumps for connection plate A & B2). Supplied with push-in hose connector for compressed air and external flow-through silencer (for pumps for connection plate C).

TECHNICAL DATA

Description	Unit	Value
Feed pressure, optimum	psi	58
Feed pressure, max.	psi	101.5
Noise level	dBA	62–66
Temperature range	°F	-4-176
Weight	oz	1.16 (A), 2.19 (B2), 1.69 (C), 0.46 (Z)
Material		PA, POM, SS, NBR (Viton/EPDM), Al (B2 only), ABS (C only)

VACUUM FLOW

Feed pressure	Air consumption	Vacuum flow (scfm) at different vacuum levels (-inHg)										Max vacuum
psi	scfm	0	3	6	9	12	15	18	21	24	27	-inHg
58	1.67	1.61	0.74	0.51	0.44	0.34	0.28	0.21	0.15	0.08	0.02	27.9

EVACUATION TIME

Feed pressure	Air consumption	Evacuation time (s/cf) to reach different vacuum levels (-inHg)									Max vacuum
psi	scfm	3	6	9	12	15	18	21	24	27	-inHg
58	1.67	3.12	13.3	26.6	42.5	62.3	87.8	122	187	397	27.9

See page 28 for recommended hose dimensions for compressed air, vacuum & exhaust connections.

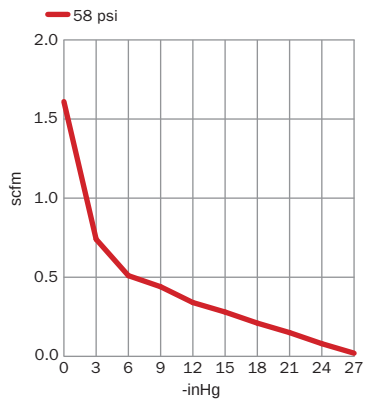

Vacuum flow

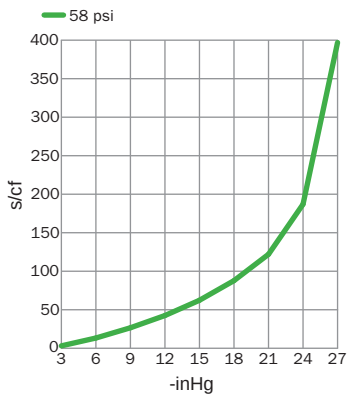

Evacuation time

ORDERING INFORMATION

	Description	Part No.
A	Vacuum pump MINI X10L, conn. A, NBR seals	X10A5-AN
A	Vacuum pump MINI X10L, conn. A, NBR seals, non-return valve	X10A5-ANA
B	Vacuum pump MINI X10L, conn. B2, NBR seals	X10A5-B2N
B	Vacuum pump MINI X10L, conn. B2, NBR seals, non-return valve	X10A5-B2NA
C	Vacuum pump MINI X10L, conn. C, NBR seals	X10A5-CN
C	Vacuum pump MINI X10L, conn. C, NBR seals, non-return valve	X10A5-CNA
D	Vacuum pump MINI X10L, conn. Z, NBR seals	X10A5-ZN
D	Vacuum pump MINI X10L, conn. Z, NBR seals, non-return valve	X10A5-ZNA

Viton® or EPDM seals optional (i.e. X5A5-AV or X5A5-AE)

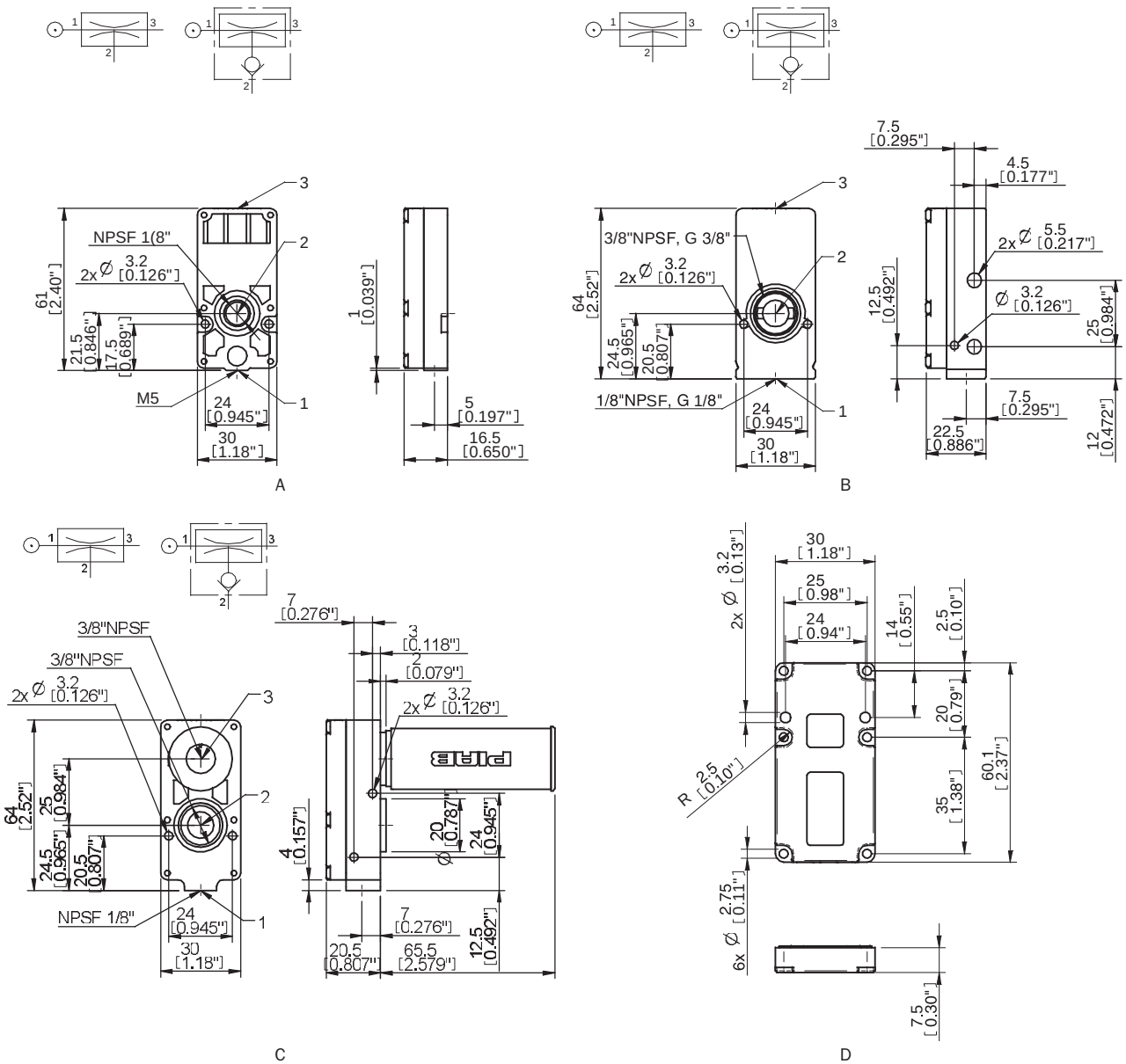

ORDERING INFORMATION, ACCESSORIES

Description	Part No.
Seal kit MINI 5–28, NBR	32.01.097
Seal kit MINI 5–28, Viton®	32.01.097V
Seal kit MINI 5–28, EPDM	32.01.097E

Seal kits include flap valves, gaskets and compressed-air filters.

X20L

- Extra vacuum level to 27.9 -inHg
- Small size and low weight
- Use in tightly sealed or non-porous applications

Supplied with push-in hose connector for compressed air (for pumps with connection plate B2). Supplied with push-in hose connector for compressed air and external flow-through silencer (for pumps with connection plate C & T).

TECHNICAL DATA

Description	Unit	Value
Feed pressure, optimum	psi	58
Feed pressure, max.	psi	101.5
Noise level	dBA	62–66
Temperature range	°F	-4-176
Weight	oz	2.68 (B2), 2.12 (C), 8.40 (T)
Material		PA, POM, SS, NBR (Viton/EPDM), Al (B2 only), ABS (C only)

VACUUM FLOW

Feed pressure	Air consumption	Vacuum flow (scfm) at different vacuum levels (-inHg)										Max vacuum
psi	scfm	0	3	6	9	12	15	18	21	24	27	-inHg
58	3.39	4.03	2.12	1.06	0.93	0.81	0.64	0.53	0.36	0.21	0.04	27.9

EVACUATION TIME

Feed pressure	Air consumption	Evacuation time (s/cf) to reach different vacuum levels (-inHg)									Max vacuum
psi	scfm	3	6	9	12	15	18	21	24	27	-inHg
58	3.39	1.56	5.67	11.3	18.4	27.5	39.7	53.8	76.5	144	27.9

See page 28 for recommended hose dimensions for compressed air, vacuum & exhaust connections.

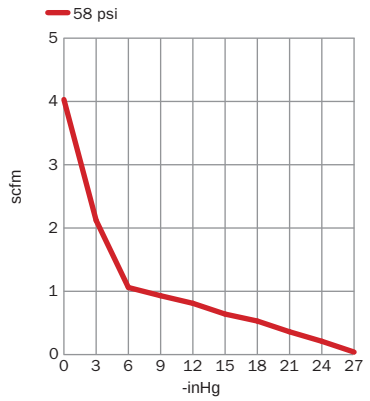

Vacuum flow

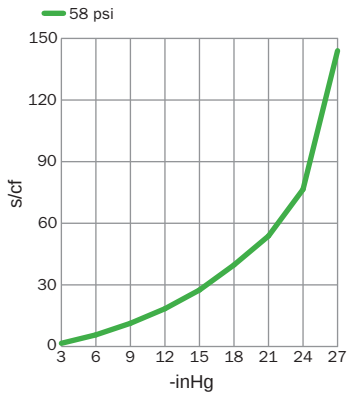

Evacuation time

ORDERING INFORMATION

	Description	Part No.
A	Vacuum pump MINI X20L, conn. B2, NBR seals	X20A5-B2N
A	Vacuum pump MINI X20L, conn. B2, NBR seals, non-return valve	X20A5-B2NA
B	Vacuum pump MINI X20L, conn. C, NBR seals	X20A5-CN
B	Vacuum pump MINI X20L, conn. C, NBR seals, non-return valve	X20A5-CNA
C	Vacuum pump MINI X20L, conn. T, NBR seals	X20F5-TN
C	Vacuum pump MINI X20L, conn. T, NBR seals, non-return valve	X20F5-TNA

Viton® or EPDM seals optional (i.e. Part No. X20A5-AV or X20A5-AE)

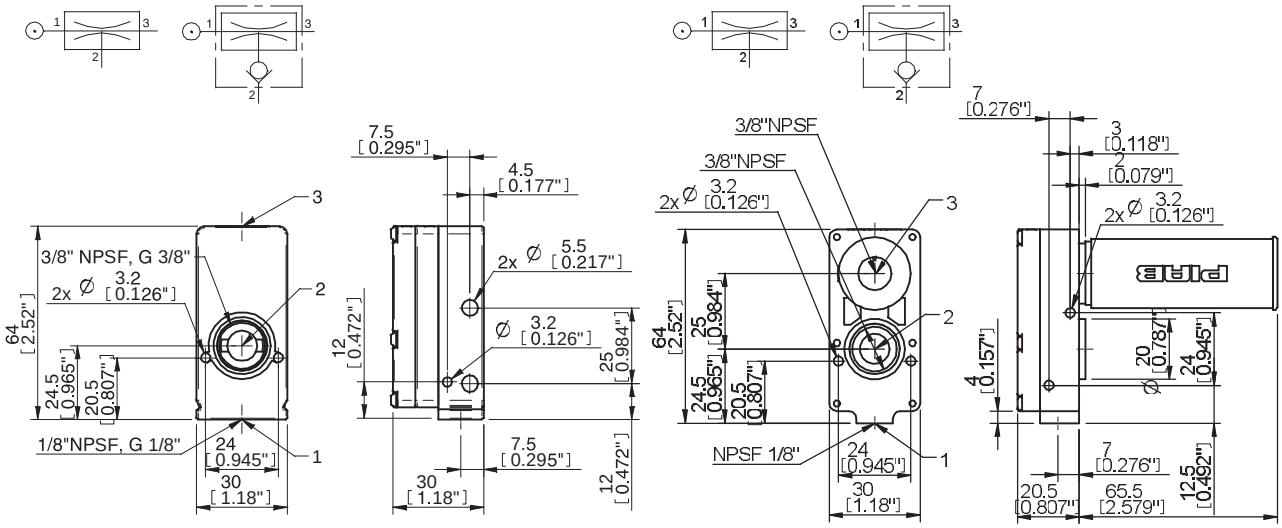

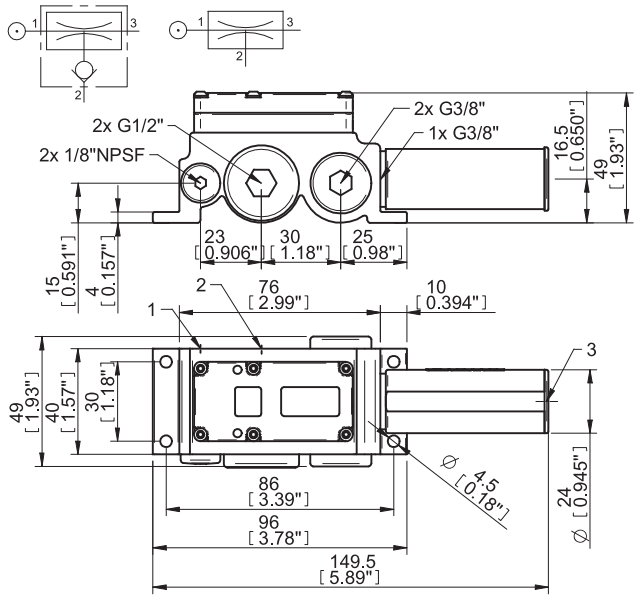

ORDERING INFORMATION, ACCESSORIES

Description	Part No.
Seal kit MINI 5–28, NBR	32.01.097
Seal kit MINI 5–28, Viton®	32.01.097V
Seal kit MINI 5–28, EPDM	32.01.097E

Seal kits include flap valves, gaskets and compressed-air filters.

X40L

- Extra vacuum level to 27.9 -inHg
- Small size and low weight
- Use in tightly sealed or non-porous applications

Supplied with two flow-through silencers.

TECHNICAL DATA

Description	Unit	Value
Feed pressure, optimum	psi	58
Feed pressure, max.	psi	101.5
Noise level	dBA	60–70
Temperature range	°F	-4-176
Weight	oz	14.9
Material		Al, PA, POM, NBR (Viton/EPDM), SS, ABS

VACUUM FLOW

Feed pressure	Air consumption	Vacuum flow (scfm) at different vacuum levels (-inHg)										Max vacuum
psi	scfm	0	3	6	9	12	15	18	21	24	27	-inHg
58	6.57	6.78	3.18	2.12	1.91	1.48	1.27	1.06	0.85	0.36	0.08	27.9

EVACUATION TIME

Feed pressure	Air consumption	Evacuation time (s/cf) to reach different vacuum levels (-inHg)									Max vacuum
psi	scfm	3	6	9	12	15	18	21	24	27	-inHg
58	6.57	1.08	3.40	6.23	9.35	13.6	19.3	34.0	62.3	90.7	27.9

See page 28 for recommended hose dimensions for compressed air, vacuum & exhaust connections.

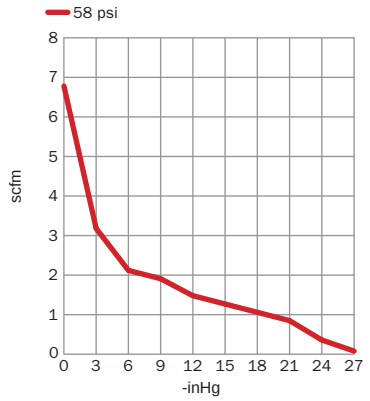

Vacuum flow

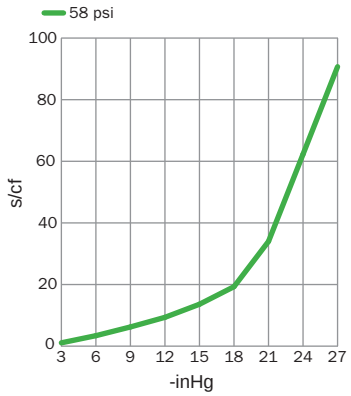

Evacuation time

ORDERING INFORMATION

Description	Part No.
Vacuum pump MINI X40L, conn. K, NBR sealings	X40F5-KN
Vacuum pump MINI X40L, conn. K, NBR sealings, non-return valve	X40F5-KNA

Viton® or EPDM seals optional (X40F5-KV or X40F5-KE)

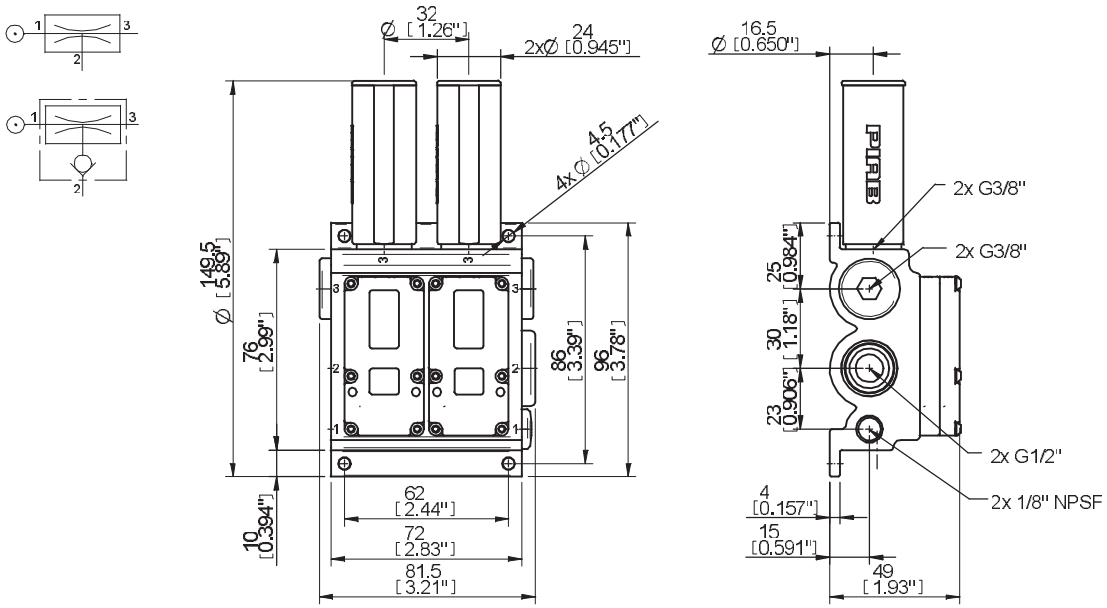

ORDERING INFORMATION, ACCESSORIES

Description	Part No.
Seal kit MINI 30–60, NBR seals	01.00.491
Seal kit MINI 30–60, Viton® seals	01.00.491V
Seal kit MINI 30–60, EPDM seals	01.00.491E

Seal kits include flap valves, gaskets and compressed air filters.

L SERIES

- Large vacuum flows
- Fast evacuation time
- Good for handling porous materials or if leakage is present
- Energy-Saving (ES) available

Supplied with a push-in connector for compressed air, flow-through silencer, vacuum gauge and mounting brackets (see Accessories).

TECHNICAL DATA

Description	Unit	Value
Feed pressure, optimum	psi	87
Feed pressure, max.	psi	101.5
Noise level	dBA	60–65
Temperature range	°F	-4-176
Weight	lb	L25, L50-1.49, 1.65 (ES); L100-1.98, 2.34 (ES)
Material		Al, PPS, SS, PA, NBR (Viton/EPDM)

VACUUM FLOW

Model	Feed pressure	Air consumption	Vacuum flow (scfm) at different vacuum levels (-inHg)								Max vacuum
	psi	scfm	0	3	6	9	12	15	18	21	-inHg
L25	87	3.81	12.9	6.99	4.66	2.97	1.72	1.36	0.95	0.61	22.3
L50	87	7.42	23.1	12.1	8.05	5.30	2.97	2.33	1.70	1.02	22.3
L100	87	14.8	35.0	20.3	15.9	10.6	6.14	4.87	3.39	2.01	22.3

EVACUATION TIME

Model	Feed pressure	Air consumption	Evacuation time (s/cf) to reach different vacuum levels (-inHg)							Max vacuum
	psi	scfm	3	6	9	12	15	18	21	-inHg
L25	87	3.81	1.19	2.10	3.40	5.95	10.2	15.9	24.9	22.3
L50	87	7.42	0.42	0.93	1.70	3.12	5.38	8.22	12.7	22.3
L100	87	14.8	0.23	0.51	0.93	1.70	2.83	4.25	6.52	22.3

See page 28 for recommended hose dimensions for compressed air, vacuum & exhaust connections.

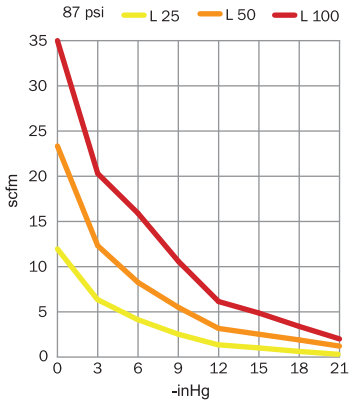

Vacuum flow

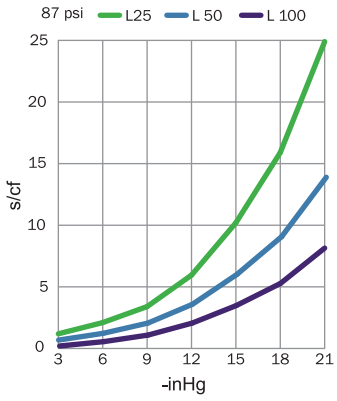

Evacuation time

ORDERING INFORMATION

	Description	Part No.
B	Vacuum pump CLASSIC L25, conn. E, NBR seals	L25B6-EN
C	Vacuum pump CLASSIC L25, conn. E, NBR seals, non-return valve	L25B6-ENA
A	Vacuum pump CLASSIC L25, conn. E, NBR seals, ES (Energy-Saving)	L25B6-ENAF
	Classic Pump/Vacuum Filter Combination (with FREE 3-pack filter elements)	PPFCL25B6-EN
B	Vacuum pump CLASSIC L50, conn. E, NBR seals	L50B6-EN
C	Vacuum pump CLASSIC L50, conn. E, NBR seals, non-return valve	L50B6-ENA
A	Vacuum pump CLASSIC L50, conn. E, NBR seals, ES (Energy-Saving)	L50B6-ENAF
	Classic Pump/Vacuum Filter Combination (with FREE 3-pack filter elements)	PPFCL50B6-EN
B	Vacuum pump CLASSIC L100, conn. E, NBR seals	L100B6-EN
C	Vacuum pump CLASSIC L100, conn. E, NBR seals, non-return valve	L100B6-ENA
A	Vacuum pump CLASSIC L100, conn. E, NBR seals, ES (Energy-Saving)	L100B6-ENAF
	Classic Pump/Vacuum Filter Combination (with FREE 3-pack filter elements)	PPFCL100B6-EN

Viton® or EPDM seals optional (i.e. Part No. L25B6-EV or L25B6-EE)

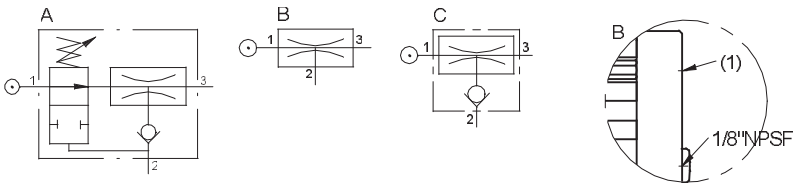

	1	2	3
E	1/4"NPT	3/4"NPT	3/4"NPT

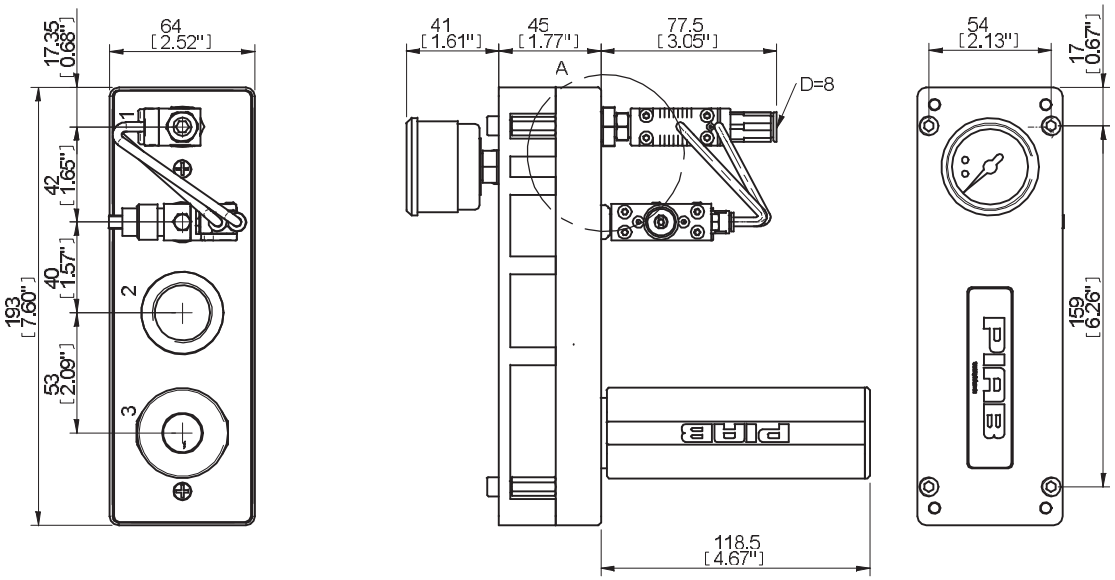

Y=45 [1.77"] L25, L50 Y=65 [2.56"] L100

ORDERING INFORMATION, ACCESSORIES

Description	Part No.
Seal kit CLASSIC, NBR	32.01.069
Seal kit CLASSIC, Viton®	32.01.069V
Seal kit CLASSIC, EPDM	32.01.069E
Vacuum filter, 3/4" NPT	PPSF.75-X35

Seal kits include flap valves, gaskets and compressed-air filters.

M SERIES

- Medium vacuum levels to 27.1 -inHg
- Operates at 50 psi
- Good for handling porous materials or if leakage is present
- Energy-Saving (ES) available

Supplied with a push-in connector for compressed air, flow-through silencer, vacuum gauge and mounting brackets (see Accessories).

TECHNICAL DATA

Description	Unit	Value
Feed pressure, optimum	psi	50
Feed pressure, max.	psi	101.5
Noise level	dBA	60–65
Temperature range	°F	-4-176
Weight	lb	M25L, M50L-1.49, 1.65 (ES); M100L-1.98, 2.34 (ES)
Material		Al, PPS, SS, PA, NBR (Viton/EPDM)

VACUUM FLOW

Model	Feed pressure psi	Air consumption scfm	Vacuum flow (scfm) at different vacuum levels (-inHg)										Max vacuum -inHg
			0	3	6	9	12	15	18	21	24	27	
M25L	50	4.03	12.5	5.72	3.81	2.54	1.59	1.08	0.81	0.59	0.23	0.04	27.1
M50L	50	7.84	21.8	10.4	7.42	4.66	2.75	2.12	1.70	1.06	0.40	0.02	27.1
M100L	50	15.9	28.8	17.4	12.3	7.42	5.09	4.03	2.97	2.12	1.02	0.02	27.1

EVACUATION TIME

Model	Feed pressure psi	Air consumption scfm	Evacuation time (s/cf) to reach different vacuum levels (-inHg)									Max vacuum -inHg
			3	6	9	12	15	18	21	24	27	
M25L	50	4.03	0.65	1.64	3.40	6.52	11.3	18.1	28.0	45.3	110	27.1
M50L	50	7.84	0.40	0.93	1.76	3.40	5.95	9.35	14.2	23.2	70.8	27.1
M100L	50	15.9	0.42	0.76	1.27	2.27	3.40	5.10	7.37	12.2	34.0	27.1

See page 28 for recommended hose dimensions for compressed air, vacuum & exhaust connections.

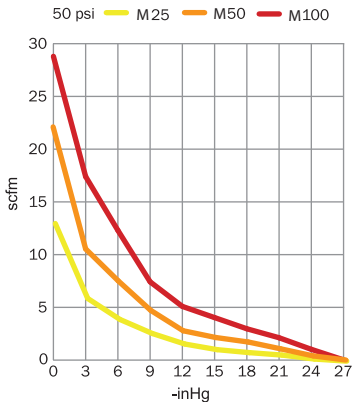

Vacuum flow

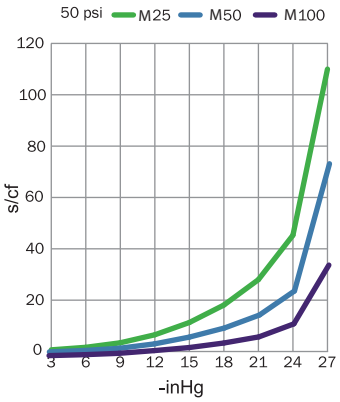

Evacuation time

ORDERING INFORMATION

	Description	Part No.
B	Vacuum pump CLASSIC M25L, conn. E, NBR seals	M25B5-EN
C	Vacuum pump CLASSIC M25L, conn. E, NBR seals, non-return valve	M25B5-ENA
A	Vacuum pump CLASSIC M25L, conn. E, NBR seals, ES (Energy-Saving)	M25B5-ENAF
	Classic Pump/Vacuum Filter Combination (with FREE 3-pack filter elements)	PPFCM25B5-EN
B	Vacuum pump CLASSIC M50L, conn. E, NBR seals	M50B5-EN
C	Vacuum pump CLASSIC M50L, conn. E, NBR seals, non-return valve	M50B5-ENA
A	Vacuum pump CLASSIC M50L, conn. E, NBR seals, ES (Energy-Saving)	M50B5-ENAF
	Classic Pump/Vacuum Filter Combination (with FREE 3-pack filter elements)	PPFCM50B5-EN
B	Vacuum pump CLASSIC M100L, conn. E, NBR seals	M100B5-EN
C	Vacuum pump CLASSIC M100L, conn. E, NBR seals, non-return valve	M100B5-ENA
A	Vacuum pump CLASSIC M100L, conn. E, NBR seals, ES (Energy-Saving)	M100B5-ENAF
	Classic Pump/Vacuum Filter Combination (with FREE 3-pack filter elements)	PPFCM100B5-EN

Viton® or EPDM seals optional (i.e. Part No. M25B5-EV or M25B5-EE)

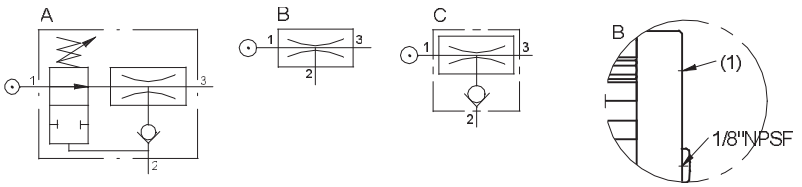

	1	2	3
E	1/4"NPT	3/4"NPT	3/4"NPT

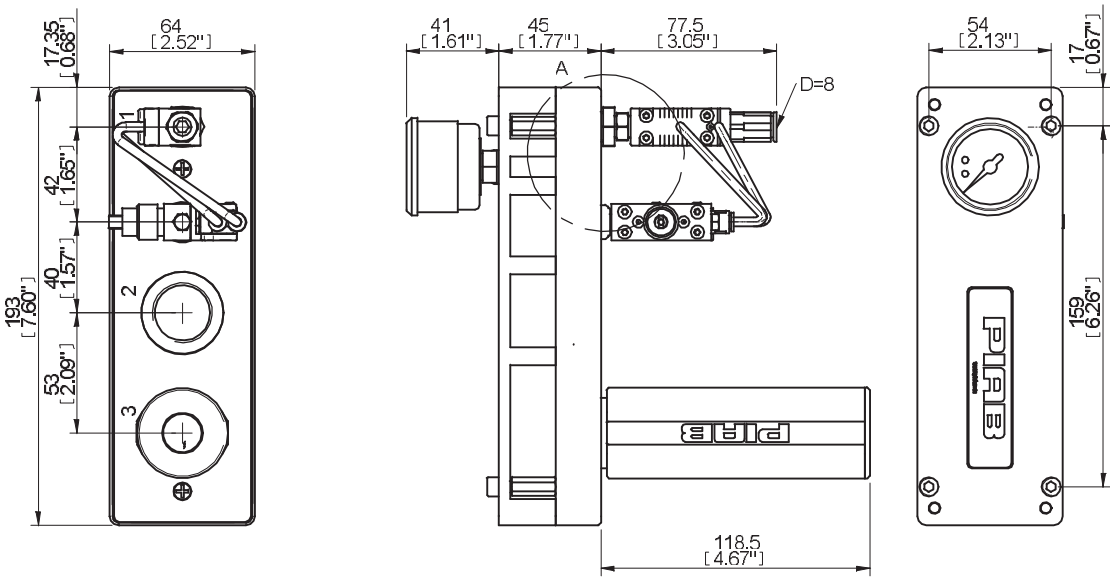

Y=45 [1.77"] M25L, M50L Y=65 [2.56"] M100L

DIMENSIONS

Size	Y mm [in]
25, 50	45 [1.77]
100	65 [2.56]

ORDERING INFORMATION, ACCESSORIES

Description	Part No.
Seal kit CLASSIC, NBR	32.01.069
Seal kit CLASSIC, Viton®	32.01.069V
Seal kit CLASSIC, EPDM	32.01.069E
Vacuum filter, 3/4" NPT	PPSF.75-X35

Seal kits include flap valves, gaskets and compressed-air filters.

H SERIES

- Higher vacuum levels to 29.85 -inHg
- Use with practically zero leakage present and non-porous applications

Supplied with a push-in connector for compressed air, flow-through silencer, vacuum gauge and mounting brackets (see Accessories).

TECHNICAL DATA

Description	Unit	Value
Feed pressure, optimum	psi	87
Feed pressure, max.	psi	101.5
Noise level	dBA	60–65
Temperature range	°F	-4-176
Weight	lb	H40-1.49; H120-1.98
Material		Al, PPS, SS, NBR (Viton/EPDM)

VACUUM FLOW

Model	Feed pressure	Air consumption	Vacuum flow (scfm) at different vacuum levels (-inHg)												Max vacuum
	psi	scfm	0	3	6	9	12	15	18	21	24	27	28	29.2	-inHg
H40	87	5.51	5.93	4.45	3.18	1.91	0.85	0.64	0.42	0.30	0.21	0.20	0.04	0.01	29.5
H120	87	16.1	17.8	14.0	9.96	5.72	3.18	2.54	1.82	1.31	0.91	0.21	0.11	0.02	29.85

EVACUATION TIME

Model	Feed pressure	Air consumption	Evacuation time (s/cf) to reach different vacuum levels (-inHg)													Max vacuum
	psi	scfm	3	6	9	12	15	18	21	24	27	28	29.2	29.4	29.65	-inHg
H40	87	5.51	0.91	2.12	4.25	9.07	18.1	31.2	48.2	73.7	110	156	278	340	-	29.5
H120	87	16.1	0.51	0.93	1.70	3.12	5.10	7.65	11.9	17.6	36.8	59.5	119	153	235	29.85

See page 28 for recommended hose dimensions for compressed air, vacuum & exhaust connections.

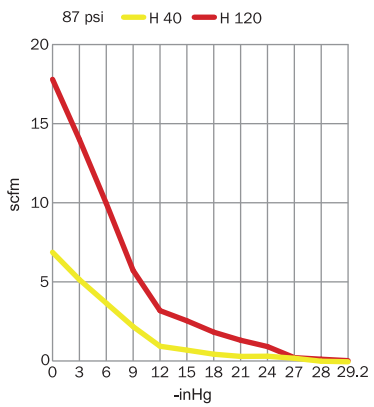

Vacuum flow

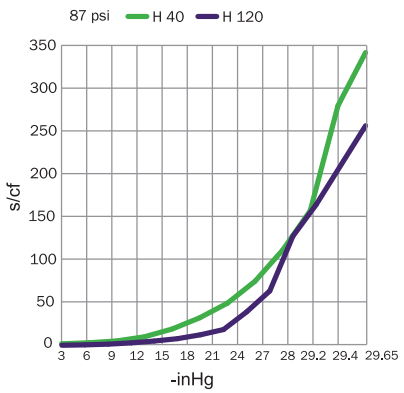

Evacuation time

ORDERING INFORMATION

	Description	Part No.
B	Vacuum pump CLASSIC H40, conn. E, NBR seals	H40B6-EN
C	Vacuum pump CLASSIC H40, conn. E, NBR seals, non-return valve	H40B6-ENA
A	Vacuum pump CLASSIC H40, conn. E, NBR seals, ES (Energy-Saving)	H40B6-ENAF
	Classic Pump/Vacuum Filter Combination (with FREE 3-pack filter elements)	PPFCH40B6-EN
B	Vacuum pump CLASSIC H120, conn. E, NBR seals	H120B6-EN
C	Vacuum pump CLASSIC H120, conn. E, NBR seals, non-return valve	H120B6-ENA
A	Vacuum pump CLASSIC H120, conn. E, NBR seals, ES (Energy-Saving)	H120B6-ENAF
	Classic Pump/Vacuum Filter Combination (with FREE 3-pack filter elements)	PPFCH120B6-EN

Viton® or EPDM seals optional (i.,e. Part No. H40B6-EV or H40B6-EE)

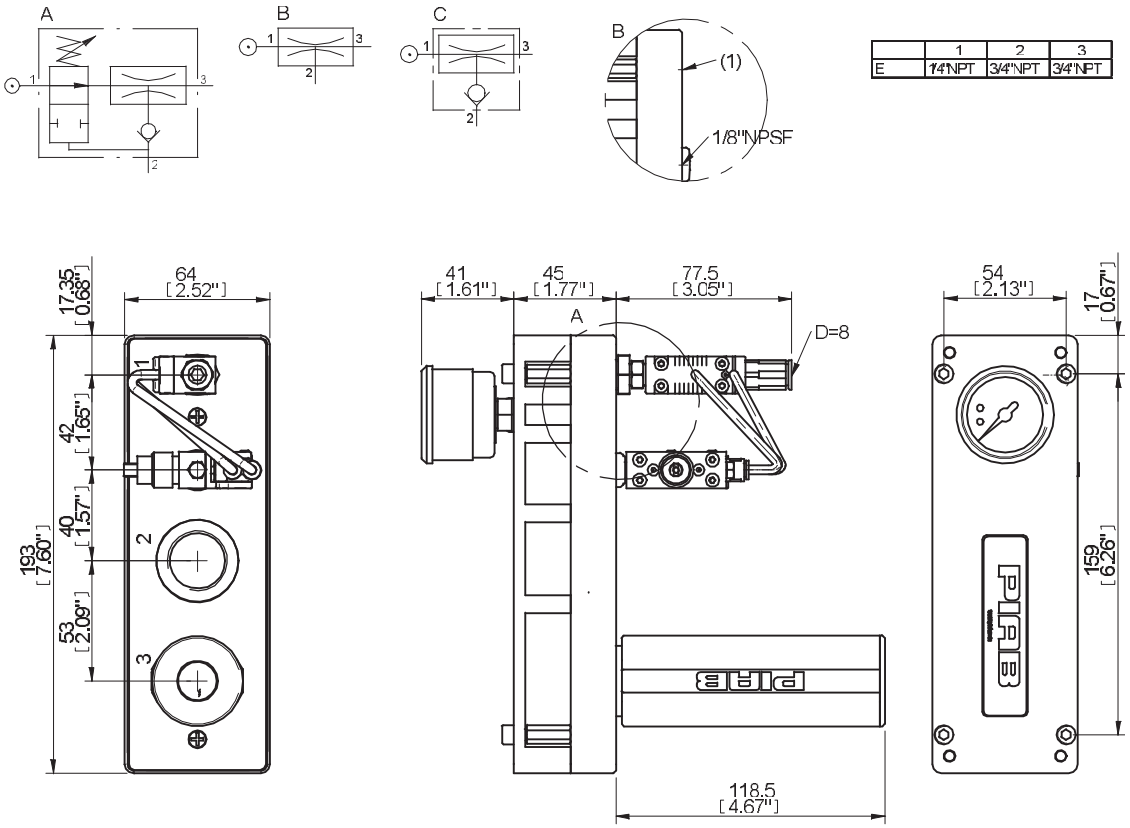

ORDERING INFORMATION, ACCESSORIES

Description	Part No.
Seal kit CLASSIC, NBR	32.01.069
Seal kit CLASSIC, Viton®	32.01.069V
Seal kit CLASSIC, EPDM	32.01.069E
Vacuum filter, 3/4" NPT	PPSF.75-X35

Seal kits include flap valves, gaskets and compressed-air filters.

L SERIES

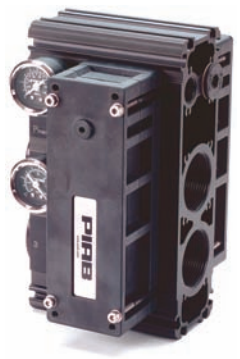

- Large amounts of vacuum flow
- Compact size and weight compared to conventional mechanical pump
- Fast evacuation time
- Good for handling porous materials or if leakage is present

Supplied with vacuum gauge, manometer, flow-through silencer & mounting brackets.

TECHNICAL DATA

Description	Unit	Value
Feed pressure, optimum	psi	87
Feed pressure, max.	psi	101.5
Noise level, with silencer	dBA	64–78
Temperature range	°F	-4-176
Weight	lb	L150, L200-10.1; L300, L400-15.2
Material		Al, PPS, SS, NBR (Viton/EPDM)

VACUUM FLOW

Model	Feed pressure	Air consumption	Vacuum flow (scfm) at different vacuum levels (-inHg)										Max vacuum
	psi	scfm	0	3	6	9	12	15	18	21	24	27	-inHg
L150	87	22.2	61.4	34.3	25.4	15.9	8.05	5.72	3.60	1.61			22.3
L200	87	29.7	80.5	48.7	34.1	23.7	13.8	10.4	6.36	2.33			22.3
L300	87	44.5	97.5	63.6	48.3	31.1	19.1	15.0	11.0	6.57			22.3
L400	87	59.3	108	82.6	59.3	34.7	25.2	20.1	14.2	8.48			22.3

EVACUATION TIME

Model	Feed pressure	Air consumption	Evacuation time (s/cf) to reach different vacuum levels (-inHg)									Max vacuum
	psi	scfm	3	6	9	12	15	18	21	24	27	-inHg
L150	87	22.2	0.14	0.34	0.59	1.13	1.98	3.40	6.23			22.3
L200	87	29.7	0.11	0.25	0.45	0.85	1.42	1.98	3.68			22.3
L300	87	44.5	0.11	0.23	0.37	0.57	0.85	1.42	2.27			22.3
L400	87	59.3	0.11	0.20	0.31	0.57	0.85	1.13	1.70			22.3

BLOW FLOW

Model	Feed pressure	Air consumption	Blow flow (scfm) at different pressure levels (psi)								Max pressure
	psi	scfm	0	2	3	4	6	7	9	10	psi
L150	87	22.2	84.8	59.3	52.3	43.9	39.0	36.7	33.5	29.5	10
L200	87	29.7	110	76.1	67.6	56.8	51.9	48.9	44.7	39.2	10
L300	87	44.5	141	111	97.7	83.1	77.8	73.5	67.2	58.7	10
L400	87	59.3	168	146	128	110	104	97.9	89.4	78.4	10

See page 28 for recommended hose dimensions for compressed air, vacuum & exhaust connections.

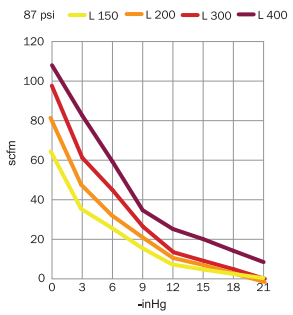

Vacuum flow

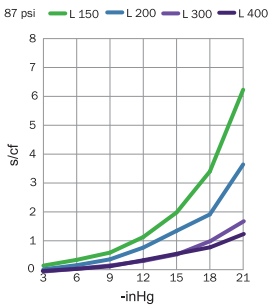

Evacuation time

ORDERING INFORMATION

Description	Part No.
Vacuum pump CLASSIC MP L150, conn. V, NBR seals	L150B6-VN
Vacuum pump CLASSIC MP L150, conn. V, NBR seals, ES (Energy-Saving)	L150B6-VNAF
Vacuum pump CLASSIC MP L200, conn. V, NBR seals	L200B6-VN
Vacuum pump CLASSIC MP L200, conn. V, NBR seals, ES (Energy-Saving)	L200B6-VNAF
Vacuum pump CLASSIC MP L300, conn. V, NBR seals	L300B6-VN
Vacuum pump CLASSIC MP L300, conn. V, NBR seals, ES (Energy-Saving)	L300B6-VNAF
Vacuum pump CLASSIC MP L400, conn. V, NBR seals	L400B6-VN
Vacuum pump CLASSIC MP L400, conn. V, NBR seals, ES (Energy-Saving)	L400B6-VNAF

Viton® or EPDM seals optional (i.e. Part No. L150B6-VV or L150B6-VE)

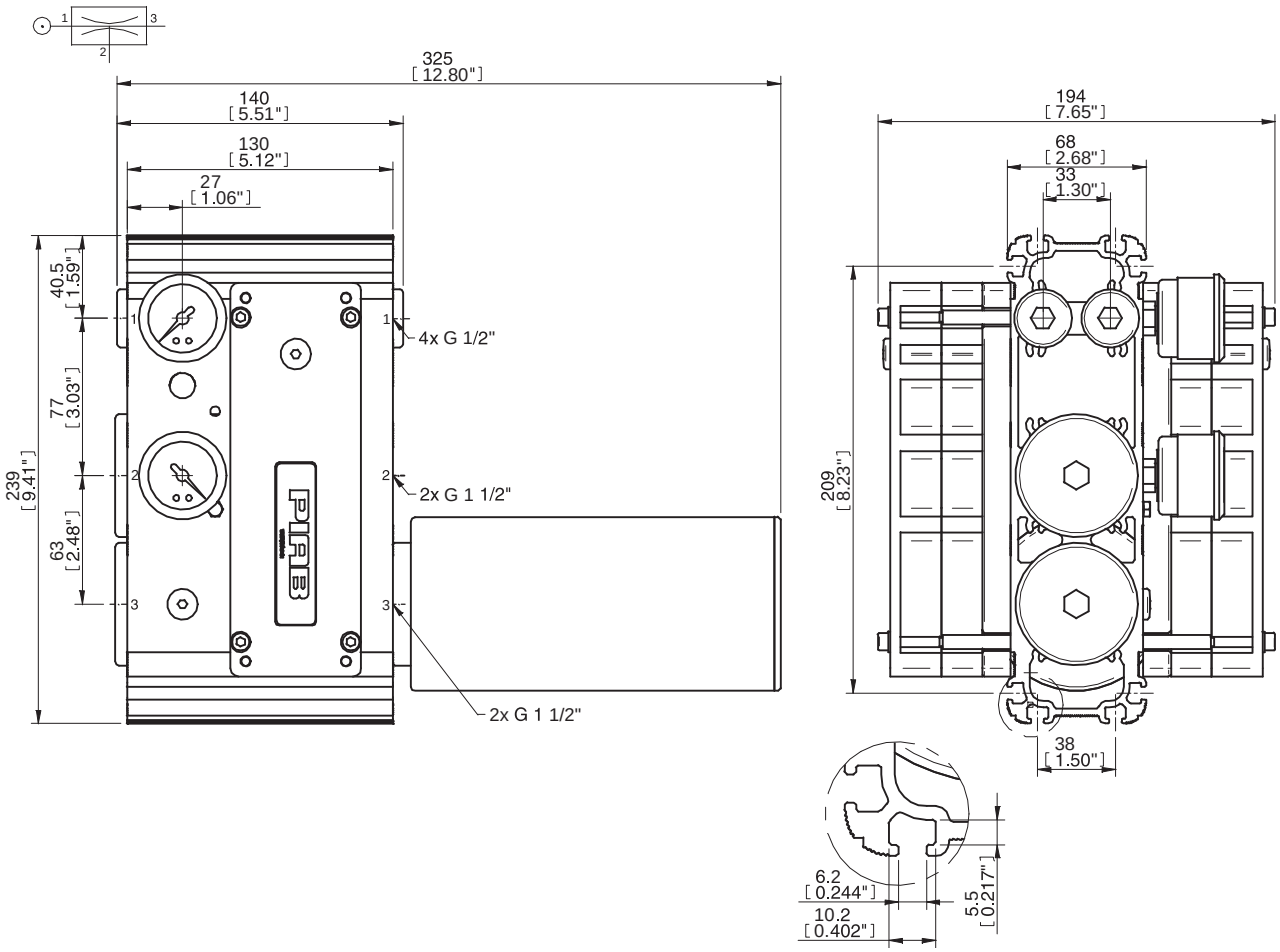

L150, L200-X=325 [12.8"]; Y=140 [5.51"]; Z=130 [5.12"] L300, L400-X=395 [15.6"]; Y=210 [8.27"]; Z=200 [7.87"]

ORDERING INFORMATION, ACCESSORIES

Description	Part No.
Seal kit CLASSIC MP, NBR	01.04.634
Seal kit CLASSIC MP, Viton® seals	01.04.832
Seal kit CLASSIC MP, EPDM seals	01.04.831

Kits include flap valves, gaskets, compressed-air filters and O-rings. 2 kits needed for CLASSIC MP 300-480.

M SERIES

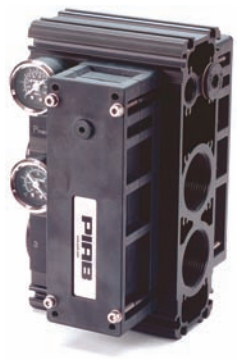

- Medium vacuum levels to 27.1 -inHg
- Compact size and weight compared to conventional mechanical pump
- Operates as low as 50 psi
- Good for applications where little or no leakage is present

Supplied with vacuum gauge, manometer, flow-through silencer & mounting brackets.

TECHNICAL DATA

Description	Unit	Value
Feed pressure, optimum	psi	50
Feed pressure, max.	psi	101.5
Noise level, with silencer	dBA	64–78
Temperature range	°F	-4-176
Weight	lb	M150, M200-10.1; M300, M400-15.2
Material		Al, PPS, SS, NBR (Viton/EPDM)

VACUUM FLOW

Model	Feed pressure psi	Air consumption scfm	Vacuum flow (scfm) at different vacuum levels (-inHg)										Max vacuum -inHg
			0	3	6	9	12	15	18	21	24	27	
M150L	50	23.9	55.1	29.2	21.8	13.8	8.05	6.14	4.66	3.18	1.42	0.11	27.1
M200L	50	32.0	63.6	36.7	26.5	16.7	10.6	8.26	6.14	4.45	2.01	0.21	27.1
M300L	50	47.9	97.5	57.2	42.6	27.1	16.1	12.7	9.54	6.78	2.75	0.40	27.1
M400L	50	63.6	119	74.2	52.3	32.2	21.2	16.1	12.1	8.05	3.39	0.40	27.1

EVACUATION TIME

Model	Feed pressure psi	Air consumption scfm	Evacuation time (s/cf) to reach different vacuum levels (-inHg)									Max vacuum -inHg
			3	6	9	12	15	18	21	24	27	
M150L	50	23.9	0.20	0.40	0.71	1.42	2.12	3.12	4.82	7.93	21.5	27.1
M200L	50	32.0	0.14	0.31	0.59	1.13	1.70	2.55	3.68	5.95	15.3	27.1
M300L	50	47.9	0.11	0.25	0.42	0.85	1.13	1.70	2.55	3.97	10.2	27.1
M400L	50	63.6	0.08	0.17	0.31	0.57	0.85	1.42	1.98	3.12	8.22	27.1

See page 28 for recommended hose dimensions for compressed air, vacuum & exhaust connections.

BLOW FLOW

Model	Feed pressure psi	Air consumption scfm	Blow flow (scfm) at different pressure levels (psi)												Max pressure psi
			0	2	3	4	6	7	9	10	12	13	15	16	
M150L	50	22.2	101	78.0	70.3	68.9	63.4	57.2	51.7	51.7	51.7	50.9	47.7	43.9	16
M200L	50	29.7	120	99.0	93.0	90.1	82.2	76.3	69.1	69.1	69.1	67.8	63.6	58.5	16
M300L	50	44.5	165	143	138	133	124	114	103	103	103	102	95.4	87.7	16
M400L	50	59.3	208	184	182	175	162	153	138	138	138	136	127	117	16

See page 28 for recommended hose dimensions for compressed air, vacuum & exhaust connections.

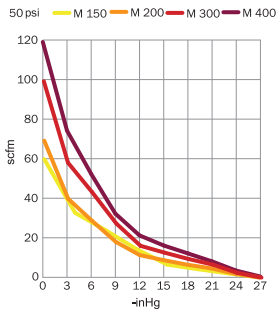

Vacuum flow

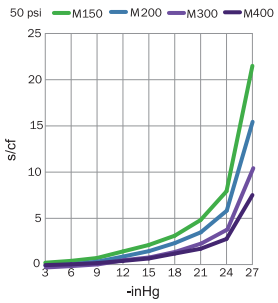

Evacuation time

ORDERING INFORMATION

Description	Part No.
Vacuum pump CLASSIC MP M150L, conn. V, NBR seals	M150B5-VN
Vacuum pump CLASSIC MP M150L, conn. V, NBR seals, ES (Energy-Saving)	M150B5-VNAF
Vacuum pump CLASSIC MP M200L, conn. V, NBR seals	M200B5-VN
Vacuum pump CLASSIC MP M200L, conn. V, NBR seals, ES (Energy-Saving)	M200B5-VNAF
Vacuum pump CLASSIC MP M300L, conn. V, NBR seals	M300B5-VN
Vacuum pump CLASSIC MP M300L, conn. V, NBR seals, ES (Energy-Saving)	M300B5-VNAF
Vacuum pump CLASSIC MP M400L, conn. V, NBR seals	M400B5-VN
Vacuum pump CLASSIC MP M400L, conn. V, NBR seals, ES (Energy-Saving)	M400B5-VNAF

Viton® or EPDM seals optional (i.e. Part No. M150B5-VV or M150B5-VE)

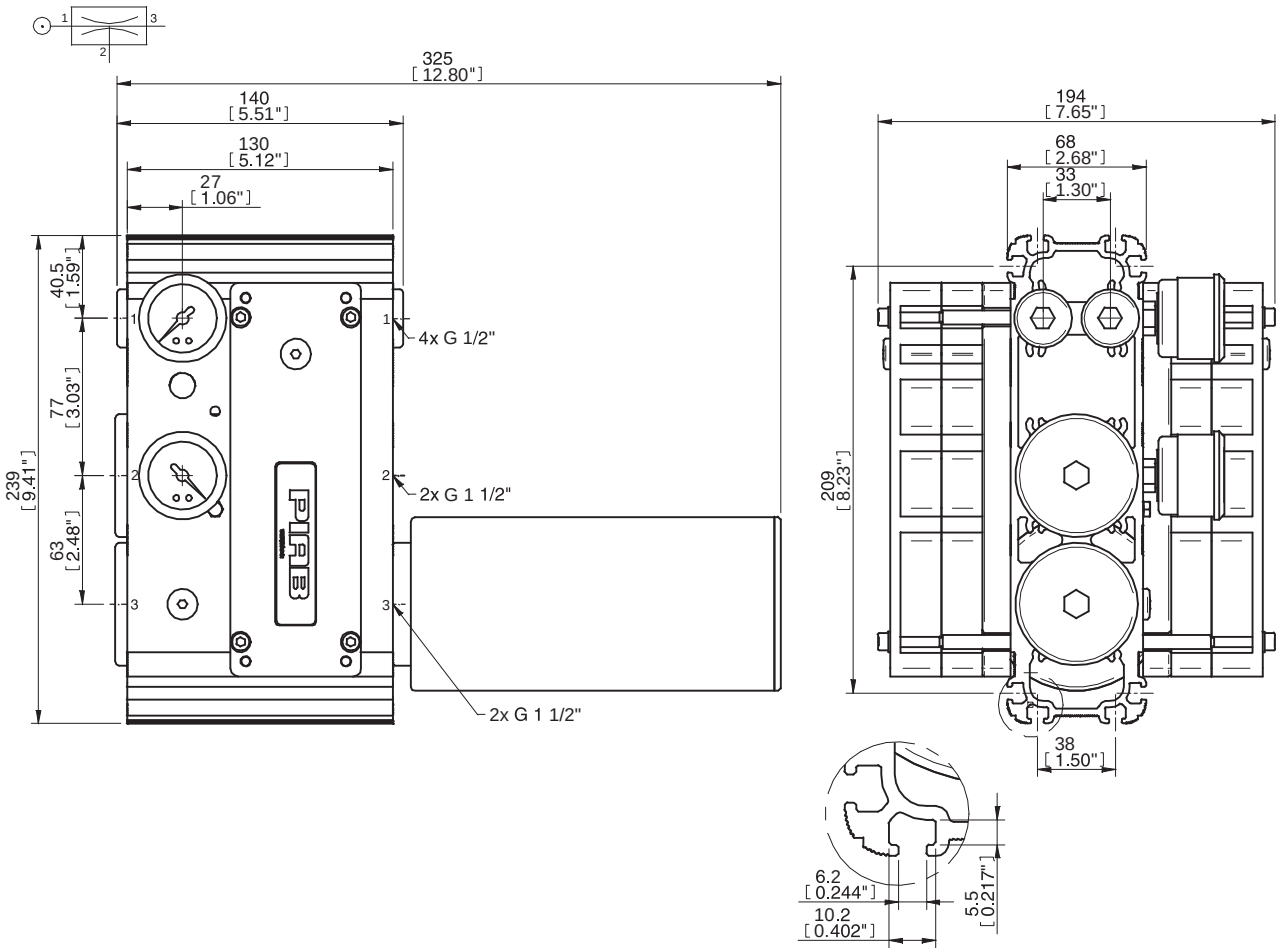

M150, M200-X=325 [12.8"]; Y=140 [5.51"]; Z=130 [5.12"] M300, M400-X=395 [15.6"]; Y=210 [8.27"]; Z=200 [7.87"]

ORDERING INFORMATION, ACCESSORIES

Description	Part No.
Seal kit CLASSIC MP, NBR	01.04.634
Seal kit CLASSIC MP, Viton® seals	01.04.832
Seal kit CLASSIC MP, EPDM seals	01.04.831

Kits include flap valves, gaskets, compressed-air filters and O-rings. 2 kits needed for CLASSIC MP 300-480.

H SERIES

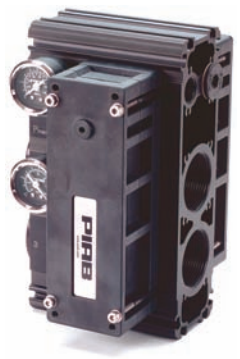

- Higher vacuum levels to 29.85 -inHg
- Use with practically zero leakage present and non-porous applications
- Compact size and weight compared to conventional mechanical pump

Supplied with vacuum gauge, manometer, flow-through silencer & mounting brackets.

TECHNICAL DATA

Description	Unit	Value
Feed pressure, optimum	psi	87
Feed pressure, max.	psi	101.5
Noise level, with silencer	dBA	64–78
Temperature range	°F	-4-176
Weight	lb	H240-10.1; H480-15.2
Material		Al, PPS, SS, NBR (Viton/EPDM)

VACUUM FLOW

Model	Feed pressure psi	Air consumption scfm	Vacuum flow (scfm) at different vacuum levels (-inHg)												Max vacuum -inHg
			0	3	6	9	12	15	18	21	24	27	28	29.2	
H240	87	32.2	35.6	26.7	18.9	10.6	6.14	4.87	3.81	2.54	1.82	0.40	0.21	0.04	29.85
H480	87	63.6	72.0	55.1	38.6	21.8	12.5	10.4	7.20	4.87	3.60	1.02	0.40	0.11	29.85

EVACUATION TIME

Model	Feed pressure psi	Air consumption scfm	Evacuation time (s/cf) to reach different vacuum levels (-inHg)											Max vacuum -inHg
			3	6	9	12	15	18	21	24	27	28	29.2	
H240	87	32.2	0.17	0.42	0.85	1.70	2.83	4.25	6.23	9.07	18.1	28.3	56.7	29.85
H480	87	63.6	0.11	0.23	0.45	0.85	1.42	2.27	3.12	4.53	9.35	14.7	27.2	29.85

See page 28 for recommended hose dimensions for compressed air, vacuum & exhaust connections.

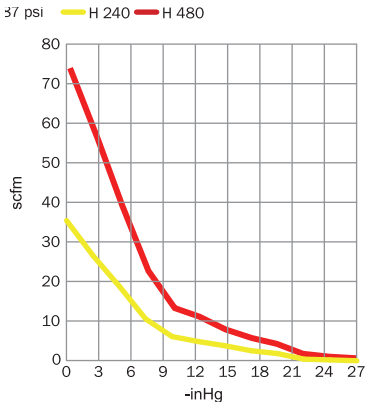

Vacuum flow

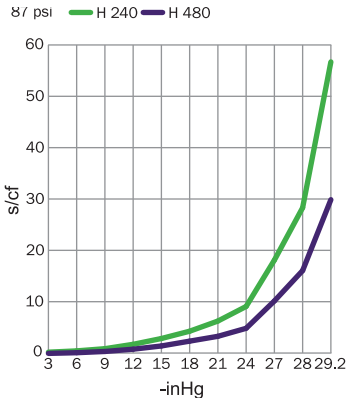

Evacuation time

ORDERING INFORMATION

Description	Part No.
Vacuum pump CLASSIC MP H240, conn. V, NBR seals	H240B6-VN
Vacuum pump CLASSIC MP H240, conn. V, NBR seals, ES (Energy-Saving)	H240B6-VNAF
Vacuum pump CLASSIC MP H480, conn. V, NBR seals	H480B6-VN
Vacuum pump CLASSIC MP H480, conn. V, NBR seals, ES (Energy-Saving)	H480B6-VNAF

Viton® or EPDM seals optional (i.e. H240B6-VV or H240B6-VE)

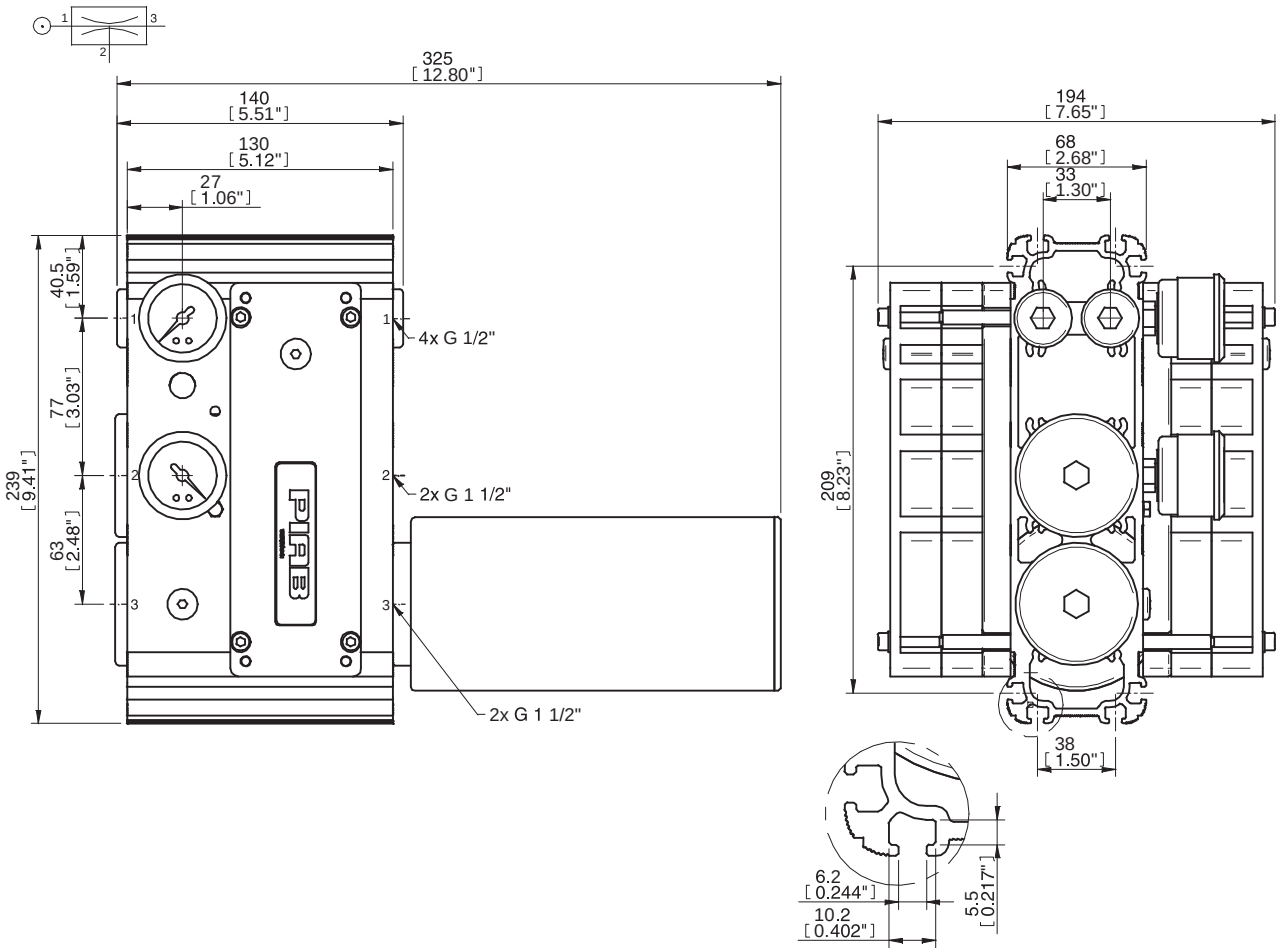

H240-X=325 [12.8"]; Y=140 [5.51"]; Z=130 [5.12"] H480-X=395 [15.6"]; Y=210 [8.27"]; Z=200 [7.87"]

ORDERING INFORMATION, ACCESSORIES

Description	Part No.
Seal kit CLASSIC MP, NBR	01.04.634
Seal kit CLASSIC MP, Viton® seals	01.04.832
Seal kit CLASSIC MP, EPDM seals	01.04.831

Kits include flap valves, gaskets, compressed-air filters and O-rings. 2 kits needed for CLASSIC MP 300-480.

MLL200

- Largest compressed air driven pump on the market
- Energy-saving (ES) available

Supplied with built-in silencer, on-off valve and vacuum gauge. It is possible to control the on/off valve remotely with a pneumatic valve.

TECHNICAL DATA

Description	Unit	Value
Feed pressure, optimum	psi	87
Feed pressure, max.	psi	101.5
Noise level	dBA	72–76
Temperature range	°F	-4-176
Weight	lb	10.8, 11.7 (ES)
Material		Al, PPS, SS, NBR (Viton/EPDM)

VACUUM FLOW

Feed pressure psi	Air consumption scfm	Vacuum flow (scfm) at different vacuum levels (-inHg)										Max vacuum -inHg
		0	3	6	9	12	15	18	21	24	27	
87	29.7	102	57.2	38.4	20.1	10.2	6.99	5.09	2.33	1.02	0.02	27.1

EVACUATION TIME

Feed pressure psi	Air consumption scfm	Evacuation time (s/cf) to reach different vacuum levels (-inHg)									Max vacuum -inHg
		3	6	9	12	15	18	21	24	27	
87	29.7	0.08	0.23	0.40	0.85	1.70	2.83	4.53	8.22	23.2	27.1

See page 28 for recommended hose dimensions for compressed air, vacuum & exhaust connections.

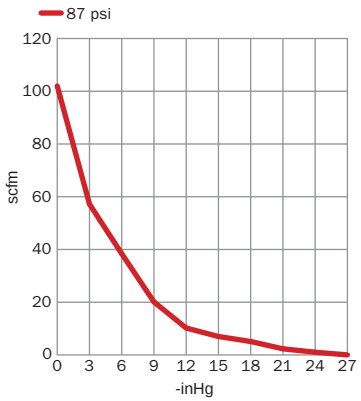

Vacuum flow

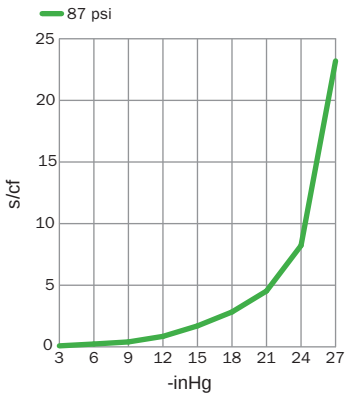

Evacuation time

ORDERING INFORMATION

	Description	Part No.
A	Vacuum pump MAXI MLL200, NBR seals, ES	01.00.741U
B	Vacuum pump MAXI MLL200, NBR seals	31.01.056U

Viton® or EPDM seals optional (i.e. Part No. 31.01.056V or 31.01.056E)

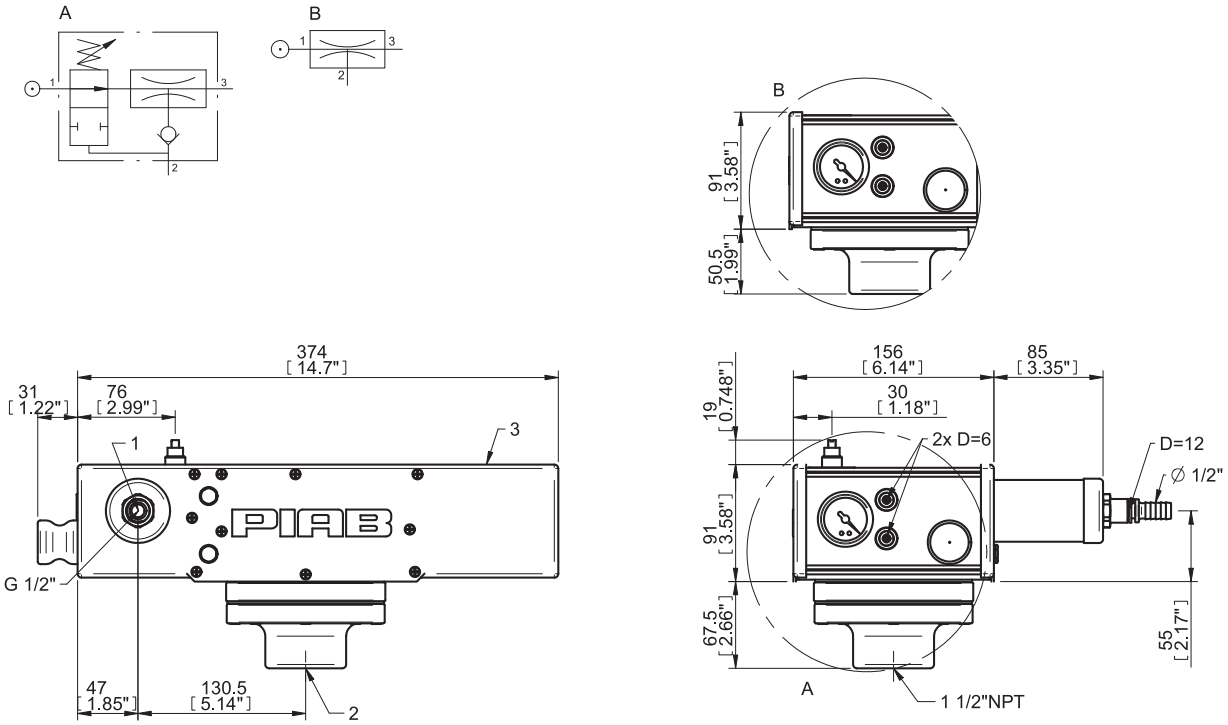

ORDERING INFORMATION, ACCESSORIES

Description	Part No.
Seal kit MAXI MLL200–400, NBR	31.01.091
Seal kit MAXI MLL200–400, Viton®	31.01.091V
Seal kit MAXI MLL200–400, EPDM	31.01.091E

Kits include flap valves, gaskets & compressed air filter.

MLL400

- Largest compressed air driven pump on the market
- Energy-saving (ES) available

Supplied with built-in silencer, on-off valve and vacuum gauge. It is possible to control the on/off valve remotely with a pneumatic valve.

TECHNICAL DATA

Description	Unit	Value
Feed pressure, optimum	psi	87
Feed pressure, max.	psi	101.5
Noise level	dBA	72–76
Temperature range	°F	-4-176
Weight	lb	11.0, 11.9 (ES)
Material		Al, PPS, SS, NBR (Viton/EPDM)

VACUUM FLOW

Feed pressure	Air consumption	Vacuum flow (scfm) at different vacuum levels (-inHg)										Max vacuum
psi	scfm	0	3	6	9	12	15	18	21	24	27	-inHg
87	59.3	195	110	74.2	39.0	19.5	13.6	9.75	4.66	1.95	0.04	27.1

EVACUATION TIME

Feed pressure	Air consumption	Evacuation time (s/cf) to reach different vacuum levels (-inHg)									Max vacuum
psi	scfm	3	6	9	12	15	18	21	24	27	-inHg
87	59.3	0.04	0.11	0.20	0.42	0.85	1.42	2.27	4.25	11.6	27.1

See page 28 for recommended hose dimensions for compressed air, vacuum & exhaust connections.

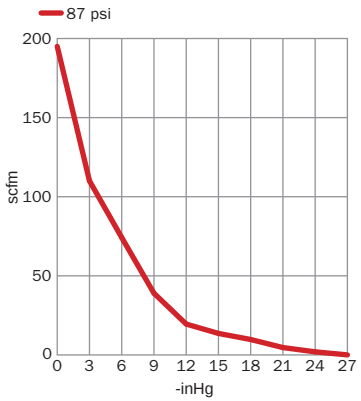

Vacuum flow

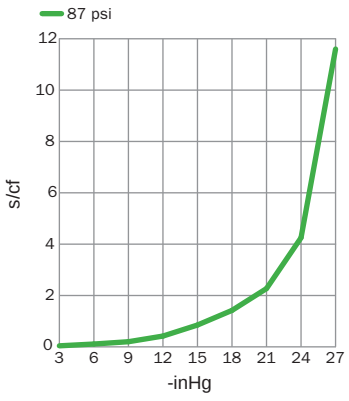

Evacuation time

ORDERING INFORMATION

	Description	Part No.
A	Vacuum pump MAXI MLL400, NBR seals, ES	01.00.742U
B	Vacuum pump MAXI MLL400, NBR seals	31.01.057U

Viton® or EPDM seals optional (i.e. Part No. 31.01.057V or 31.01.057E)

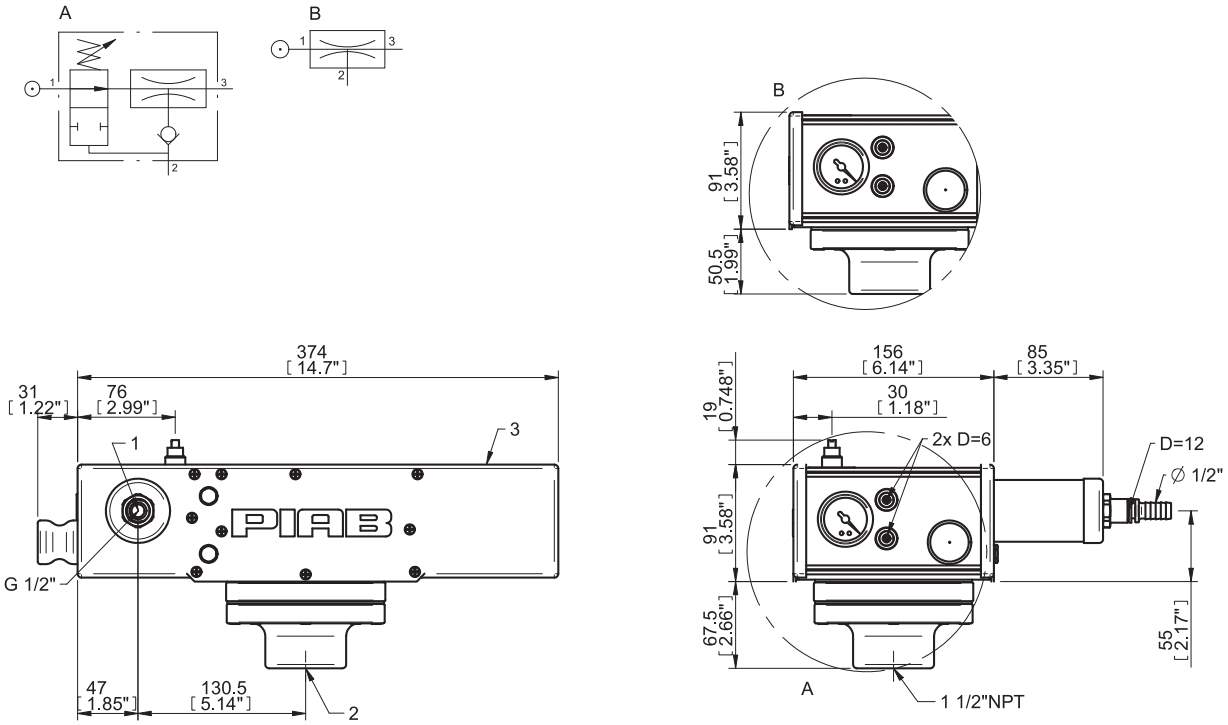

ORDERING INFORMATION, ACCESSORIES

Description	Part No.
Seal kit MAXI MLL200–400, NBR	31.01.091
Seal kit MAXI MLL200–400, Viton®	31.01.091V
Seal kit MAXI MLL200–400, EPDM	31.01.091E

Kits include flap valves, gaskets & compressed air filter.

MLL800

- Largest compressed air driven pump on the market
- Energy-saving (ES) available

Supplied with built-in silencer, on-off valve, vacuum gauge and manometer. It is possible to control the on/off valve remotely with a pneumatic valve.

TECHNICAL DATA

Description	Unit	Value
Feed pressure, optimum	psi	87
Feed pressure, max.	psi	101.5
Noise level	dBA	72–76
Temperature range	°F	-4-176
Weight	lb	16.9, 18.5 (ES)
Material		Al, PPS, SS, NBR (Viton/EPDM)

VACUUM FLOW

Feed pressure psi	Air consumption scfm	Vacuum flow (scfm) at different vacuum levels (-inHg)										Max vacuum -inHg
		0	3	6	9	12	15	18	21	24	27	
87	119	373	210	142	74.2	37.3	26.1	18.6	8.90	3.81	0.08	27.1

EVACUATION TIME

Feed pressure psi	Air consumption scfm	Evacuation time (s/cf) to reach different vacuum levels (-inHg)									Max vacuum -inHg
		3	6	9	12	15	18	21	24	27	
87	119	0.02	0.05	0.10	0.23	0.40	0.68	1.13	2.04	5.67	27.1

See page 28 for recommended hose dimensions for compressed air, vacuum & exhaust connections.

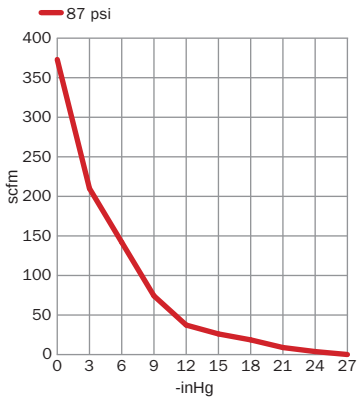

Vacuum flow

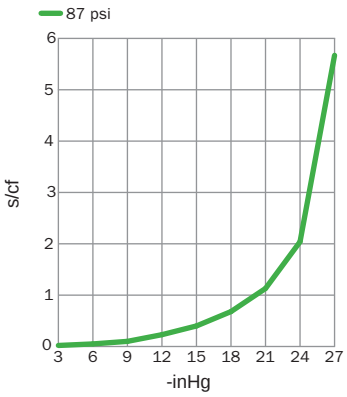

Evacuation time

ORDERING INFORMATION

	Description	Part No.
A	Vacuum pump MAXI MLL800, NBR seals, ES	01.00.743U
B	Vacuum pump MAXI MLL800, NBR seals	31.01.058U

Viton® or EPDM seals optional (i.e. Part No. 31.01.058V or 31.01.058E)

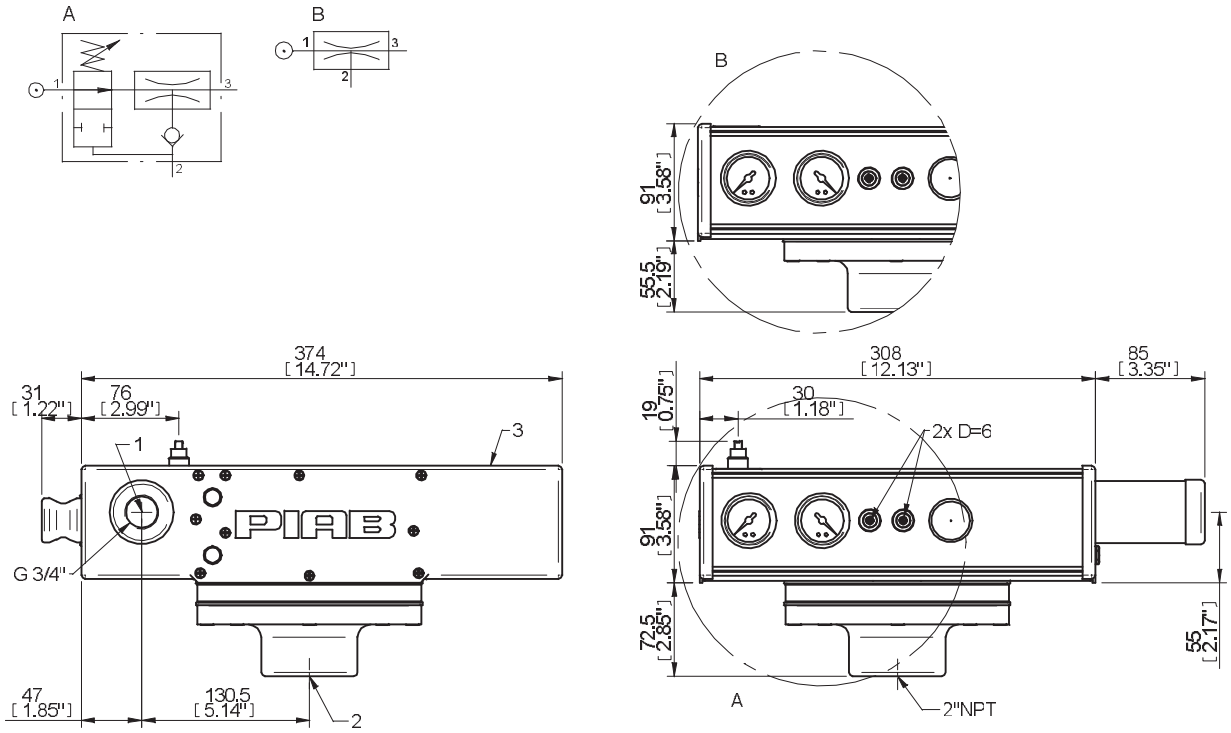

ORDERING INFORMATION, ACCESSORIES

Description	Part No.
Seal kit MAXI MLL800, NBR seals	31.01.092
Seal kit MAXI MLL800, Viton seals	31.01.092V
Seal kit MAXI MLL800, EPDM seals	31.01.092E

Kits include flap valves, gaskets & compressed air filter.

MLL1200

- Largest compressed air driven pump on the market
- Energy-saving (ES) available

Supplied with built-in silencer, on-off valve, vacuum gauge and manometer. It is possible to control the on/off valve remotely with a pneumatic valve.

TECHNICAL DATA

Description	Unit	Value
Feed pressure, optimum	psi	87
Feed pressure, max.	psi	101.5
Noise level	dBA	72–76
Temperature range	°F	-4-176
Weight	lb	19.8, 21.8 (ES)
Material		Al, PPS, SS, NBR (Viton/EPDM)

VACUUM FLOW

Feed pressure	Air consumption	Vacuum flow (scfm) at different vacuum levels (-inHg)										Max vacuum
psi	scfm	0	3	6	9	12	15	18	21	24	27	-inHg
87	178	540	303	206	108	55.1	37.9	27.1	12.9	5.51	0.11	27.1

EVACUATION TIME

Feed pressure	Air consumption	Evacuation time (s/cf) to reach different vacuum levels (-inHg)									Max vacuum
psi	scfm	3	6	9	12	15	18	21	24	27	-inHg
87	178	0.01	0.03	0.07	0.15	0.25	0.45	0.76	1.36	3.97	27.1

See page 28 for recommended hose dimensions for compressed air, vacuum & exhaust connections.

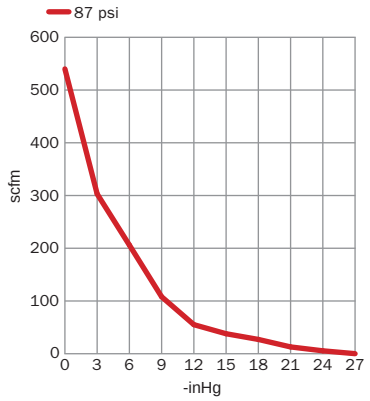

Vacuum flow

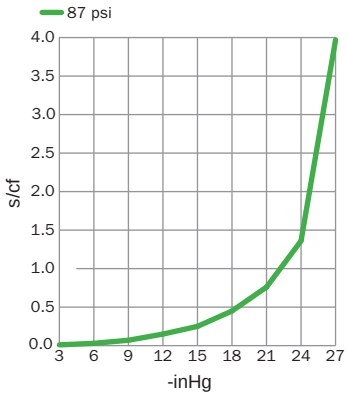

Evacuation time

ORDERING INFORMATION

	Description	Part No.
A	Vacuum pump MAXI MLL1200, NBR seals, ES	01.00.744U
B	Vacuum pump MAXI MLL1200, NBR seals	31.01.059U

Viton® or EPDM seals optional (i.e. Part No. 31.01.059V or 31.01.059E)

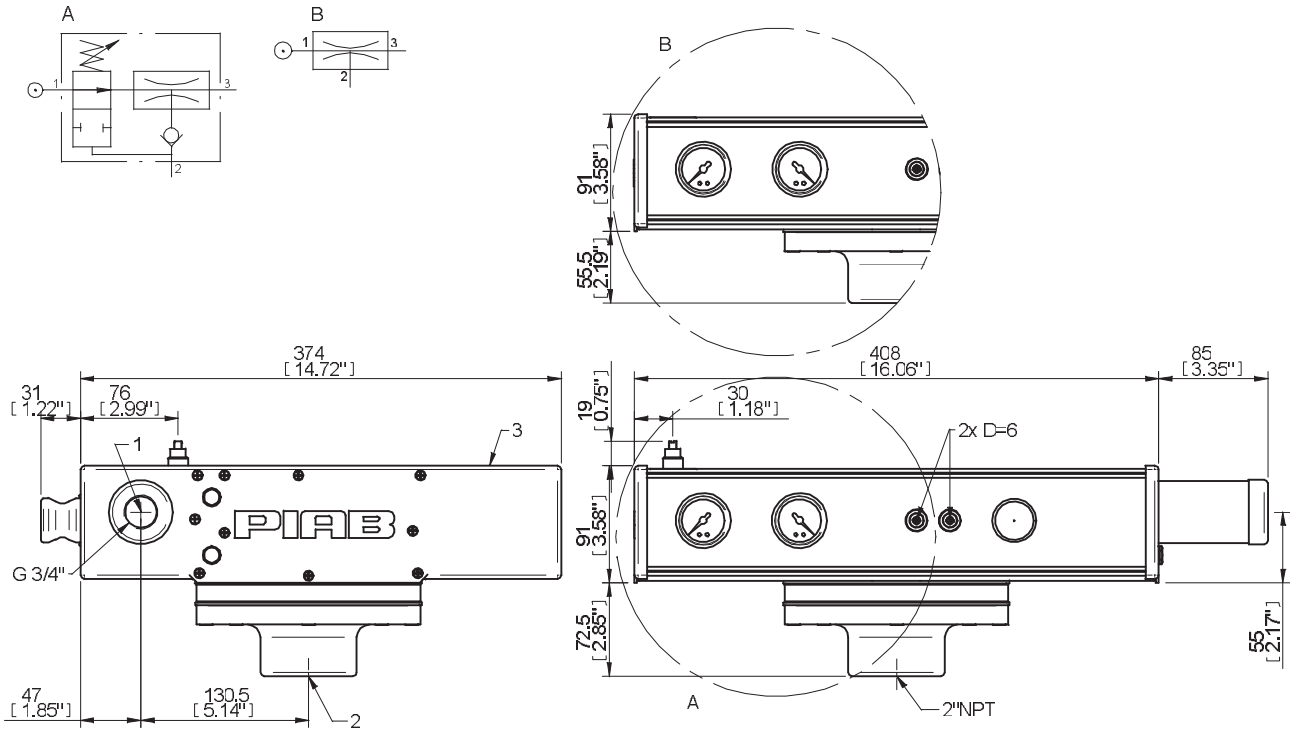

ORDERING INFORMATION, ACCESSORIES

Description	Part No.
Seal kit MAXI MLL1200, NBR seals	31.01.099
Seal kit MAXI MLL1200, Viton seals	31.01.099V
Seal kit MAXI MLL1200, EPDM seals	31.01.099E

Kits include flap valves, gaskets & compressed air filter.

CENTRAL EXHAUST

- Central exhaust is used when an external silencer is desired or if a tube/hose is to be connected for removing the exhaust.
- Suitable for vacuum pumps MAXI.

TECHNICAL DATA

Description	Value
Material	Al, NBR, PE

TECHNICAL DATA, SPECIFIC

Description	Unit	Value		
		31.16.017	31.16.018	31.16.054
Weight	lb	1.08	1.98	3.79

ORDERING INFORMATION

Description	Part No.
Central exhaust MLL100–400	31.16.017
Central exhaust MLL600–800	31.16.018
Central exhaust MLL1200	31.16.054

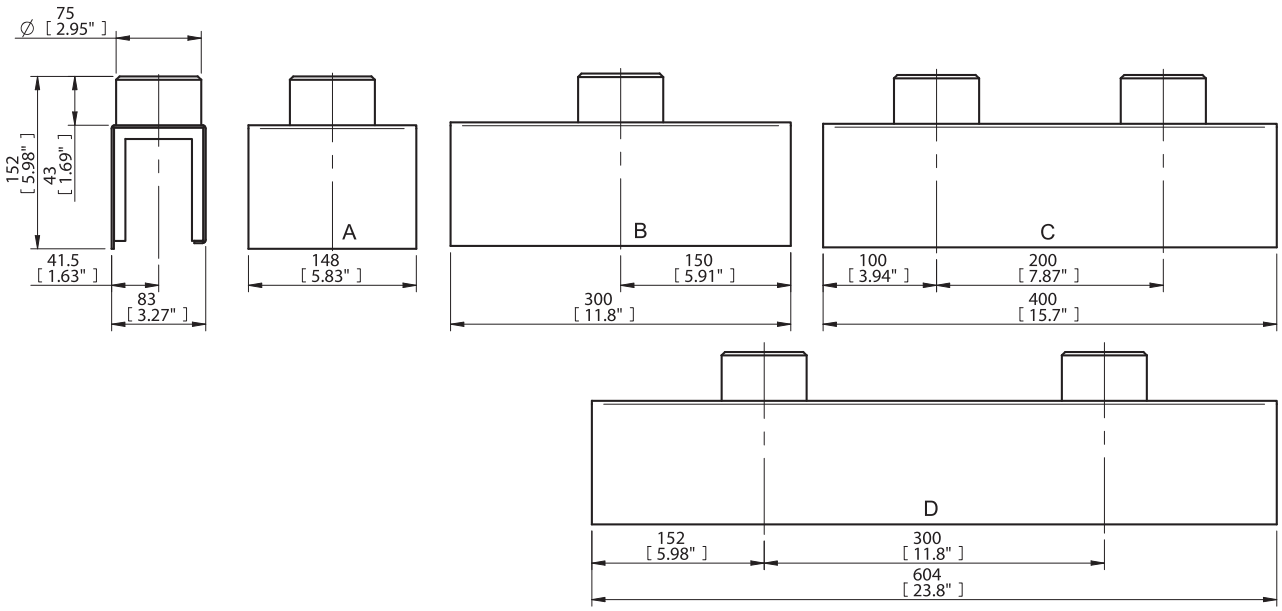

NON-RETURN VALVE

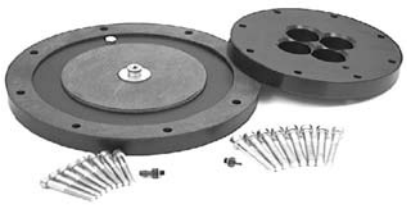

- Suitable for vacuum pumps MAXI.
- To be used together with energy-saving system.

TECHNICAL DATA

Description	Value
Material	Al, NBR, Cr, SS, CuZn, PA

TECHNICAL DATA, SPECIFIC

Description	Unit	Value	
		31.16.007	31.16.008
Weight	lb	1.08	2.14

ORDERING INFORMATION

	Description	Part No.
A	Non-return valve MLL200–600	31.16.007
B	Non-return valve MLL800–1200	31.16.008

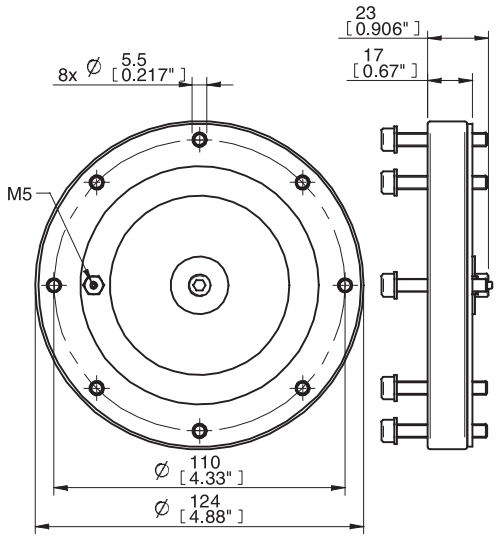

A

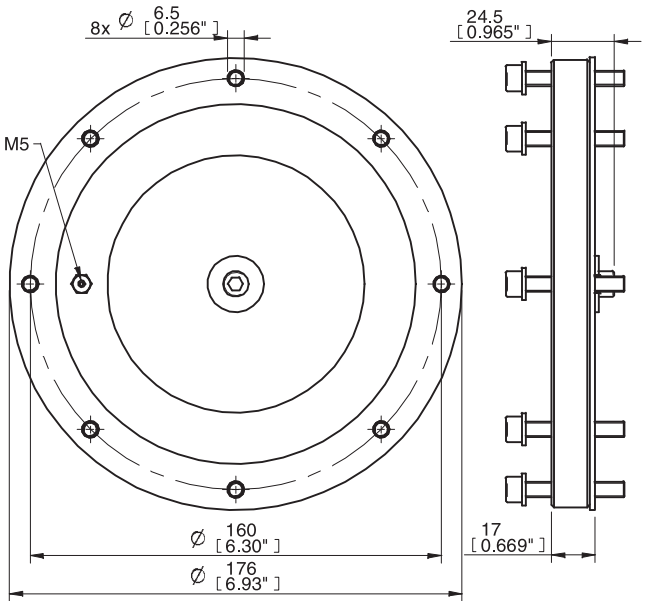

B

MOUNTING BRACKETS

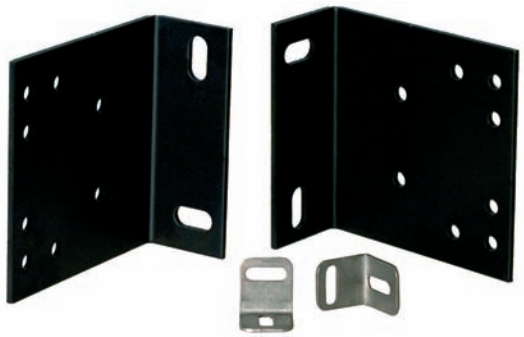

- Corrosion-resistant material
- Included as a set (2 pieces) with each vacuum pump.
- Suitable for vacuum pumps CLASSIC & CLASSIC MP

TECHNICAL DATA

Description	Unit	Value	
		01.00.505	01.03.599
Weight	oz	0.60	7.41
Material		SS 2333	Al SS4120-14

ORDERING INFORMATION

	Description	Part No.
A	Mounting brackets CLASSIC	01.00.505
B	Mounting brackets CLASSIC MP	01.03.599

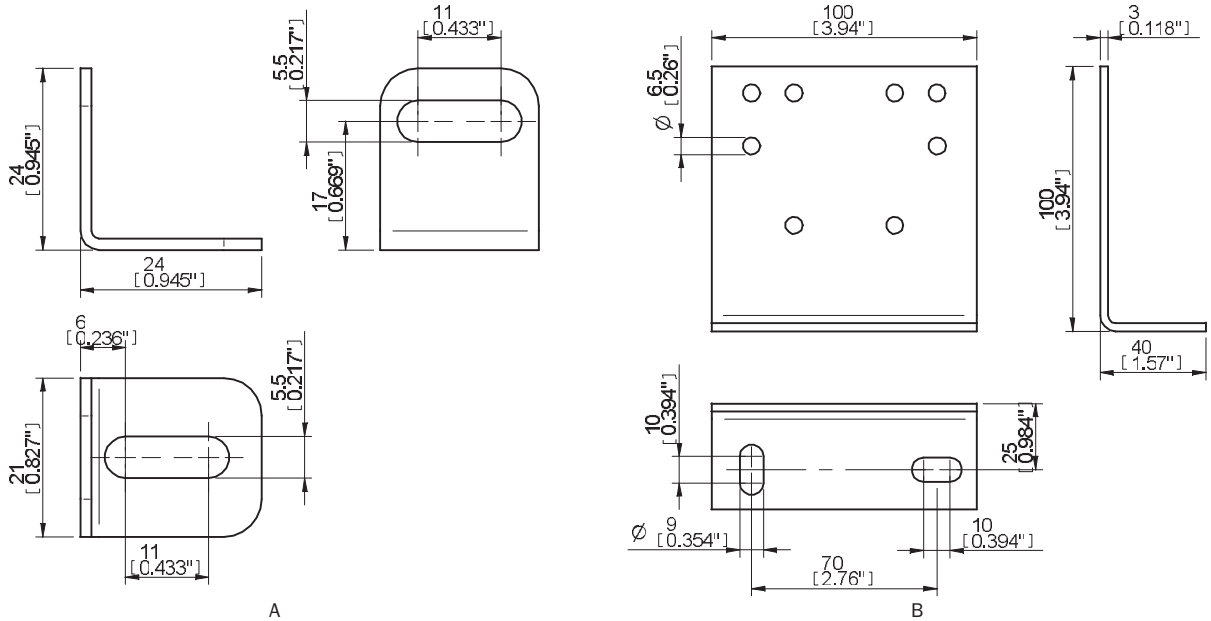

Suction Cups

Suction cups provide an easy, inexpensive, and — above all — reliable technique for moving different products and materials; fragile, awkward, compact or porous objects with flat, spherical, angled, curved or uneven surfaces. Suction cups can handle objects weighing from a few ounces to several hundred pounds.

GENERAL INFORMATION

SUCTION CUPS

GENERAL INFORMATION

HOW DOES A SUCTION CUP WORK?

A suction cup adheres to a surface when the surrounding pressure (atmospheric pressure) is higher than the pressure between the suction cup and the surface of the object. To create the low pressure in the suction cup it is connected to a vacuum source. The lower the pressure, the higher the vacuum in the suction cup — resulting in increased lifting force.

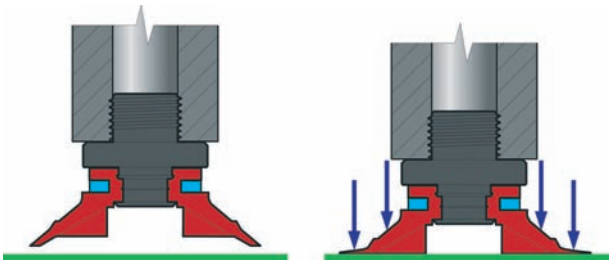

SAFETY FACTORS

The lifting force can be perpendicular or parallel to the surface to be handled. The values are based on sample data for a dry steel plate.

When sizing a suction cup, we recommend to always multiply the weight of the object to be handled by a minimum factor of 2 for increased safety.

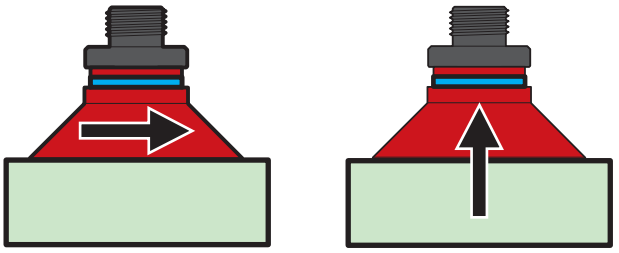

ACCELERATION AND DECELERATION

Rapidly moving objects have additional dynamic forces arising from acceleration and deceleration. In this case, we recommend multiplying the object's weight by a minimum of 2.5 when calculating the size of the suction cup.

ENERGY REQUIREMENTS

Suction cups should not be exposed to unnecessarily high vacuum levels. Too high vacuum levels will cause unnecessary wear and require more energy. With an increase of the vacuum level from 18 -inHg to 27 -inHg the lifting force increases by 20–40% while the energy requirements are increased by a factor of 10.

Since the lifting force is directly proportional to the area of the suction cup, it is better to maintain a lower vacuum level and increase the area of the suction cup when more lifting force is required.

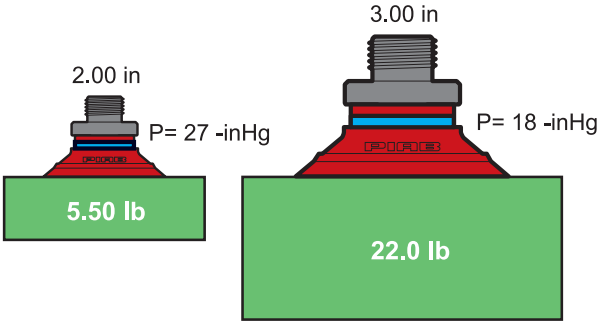

DIFFERENT MODELS

The object to be handled can have different shapes and surfaces. The application may also involve special requirements such as level adjustment or separation of thin objects. Do not hesitate to contact us for more detailed information.

SAVINGS IN ENERGY AND SYSTEM COSTS

Leakage occurs in a system when one or more suction cups do not contact the object being handled. This may happen in applications where the number, the position or the size of the objects to be lifted vary. Usually a large vacuum pump is used to cope with the air leakage and to maintain the vacuum level. The result is an inefficient system in terms of energy and capital costs.

A better solution is to use fittings with valves. The valves stop or reduce the leakage so that a smaller, more appropriate vacuum pump can be used to decrease installation and operation costs.

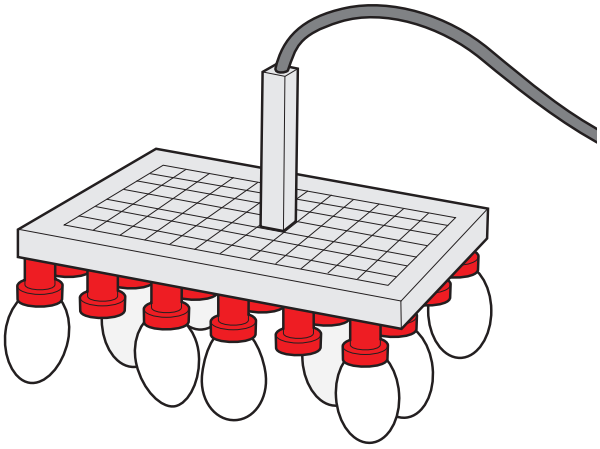

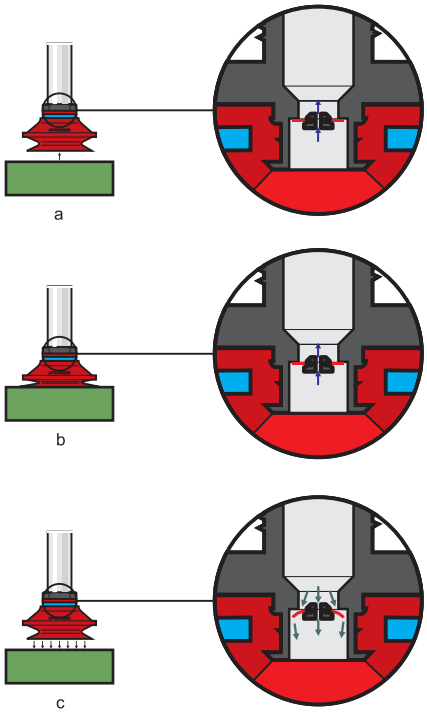

DUAL FLOW CONTROL VALVE

The air evacuated by the vacuum pump can only flow through a small opening (restriction). Even if the suction cup does not make contact with the object, the leakage will be minimal and the system will not be affected to any significant degree (a). When the suction cup makes contact with the object, only the cup's own volume has to be evacuated and the vacuum is created rapidly (b). When the object is released, air opens the built-in flap valve in the fitting and flows through a larger opening. The object is thus released very quickly (c).

Caution: Fittings with dual flow control valves can be assembled on suction cups from 20 to 50 in size (0.79"-1.97" dia.). They are used only when lifting objects made of non-porous material.

SUPPLEMENTARY DATA

Choosing the right PIAB vacuum pump when using a fitting with dual flow control valve.

The pump should be able to cope with the maximum leakage flow or the induced air that flows through the restriction. The following table shows, for every suction cup size, the diameter of the restriction and the air flow. The flow calculation is for a system with one suction cup and a vacuum level of 11.8 to 29.4 -inHg.

Dimensions of the cup	Restriction, in	Air flow[1)], cf/s
20, 25, 30* (0.79", 0.98", 1.18")	Ø0.02	0.002
40** (1.57")	Ø0.03	0.005
50 (1.97")	Ø0.04	0.006

** Excl. B30-2, B30MF, BL30-2, BX35P ** Incl. B30-2, B30MF, BL30-2, BX35P*

1)constant from approx. 11.8 -inHg to 29.4 -inHg.

MODELS

Every application requires a particular design of suction cup.
The variations described here will cover virtually any need.

U – UNIVERSAL SUCTION CUP
For handling objects with flat or slightly curved surfaces.

B, B-MF – SUCTION CUP WITH SHORT BELLOWS
Suitable for level adjustment. Several short bellows cups in one lifting device can handle objects with height differences and varying shapes. The bellows also provide a slight lifting movement to separate thin items.

BF – SUCTION CUP WITH SHORT BELLOWS AND LARGE LIP
Suitable for uneven surfaces.

BL, BX – SUCTION CUP WITH LONG BELLOWS
The same applications as for short bellows but can cope with greater differences in levels due to the longer lifting movement. Not suitable for use with deep vacuum levels.

F, F-MF – FLAT SUCTION CUP WITH INTERNAL CLEATS
Suitable for flat objects such as cardboard, sheet metal and porous materials. Cleats prevent objects from being deformed and gives extra friction when the lifting force is parallel. The suction cup has good stability and very little movement.

D, DF – DEEP SUCTION CUP
Used for curved and irregular surfaces. Can lift even over corners and edges. Not suitable for use on flat surfaces.

SUCTION CUP WITH VALVE
When several cups are connected together in a single system, for example in a lifting device, the system can be adversely affected if a suction cup leaks or misses the workpiece. To overcome this, each suction cup can be provided with a valve that opens only when the suction cup is in contact with the object. The advantages are increased safety, less air consumption and faster action.

FC – FLAT, CONCAVE SUCTION CUP WITH INTERNAL CLEATS
Designed for flat and slightly curved surfaces. A typical application is the feeding of sheet metal into a press tool. The slightly curved shape and internal cleats provide a good grip and the strengthened lip extends the life of the cup considerably.

FP – LARGE, FLAT SUCTION CUP WITH PROFILE
Suitable for handling large, heavy objects with flat surfaces.

P & OP – SUCTION CUP WITH CELLULAR RUBBER PROFILE, ROUND AND OVAL
The round version is suitable for handling uneven and rough surfaces, for example blocks of stone, concrete or channelled plate. The soft cellular rubber provides a good seal against most surfaces. The oval shape provides good stability when handling thin objects.

OB – OVAL SUCTION CUP WITH SHORT BELLOWS
Suitable for long, narrow objects and when level adjustment is required.

OC – OVAL, CONCAVE SUCTION CUP
Designed for flat and slightly curved surfaces. These suction cups have been developed for lifting metal sheets, glass sheets, etc., in the automotive industry. As primarily flat surfaces are to be handled, the lips of these cups are thicker, increasing the life of the suction cup considerably.

OF – OVAL, FLAT SUCTION CUP WITH INTERNAL CLEATS
Suitable for oblong, flat surfaces. Cleats prevent objects from being deformed and give extra friction when the lifting force is parallel. The suction cup has good stability and very little movement. Also suitable when lifting parallel as the cleats increase friction.

ACCESSORIES

The best guarantee for good reliability in a suction cup system is that the mounting of the suction cup is correctly adapted to the application. Below is a number of accessories to solve most mounting problems.

LEVEL COMPENSATORS

Level compensators are used to adjust differences in levels, particularly on lifting devices with several suction cups on a frame. When a suction cup is used on a handling robot or similar device, a level compensator is often advantageous since it places less demand on exact vertical positioning. The level compensator also provides a certain degree of shock absorption

BALL JOINT

Bending stress can easily occur on the suction cup when heavy objects are lifted. To avoid this the suction cup can be fitted with a ball joint to adapt to the varying angles. Ball joint fittings are required when lifting sheet metal with a device using several suction cups. This enables the cups to adapt to deflection caused by the weight of the sheet.

ANGLE ADAPTOR

Angle adaptors facilitate vacuum connections when space and headroom are limited. These can also be used as T-connectors.
Suction cups Ø20–50: the multi-port versions can be used as angle adaptors. They are also suitable for connecting a series of suction cups in a system.

FITTINGS

Different male and female threads from M2.5 to G3/4" are available depending on the size and model of suction cup. For suction cups 20 to 50 size a multi-port version is available as an alternative. The material used for the fittings is primarily aluminium. Many versions are available with mesh filter of stainless steel to prevent dust and other small particles to flow into the system.

APPLICATION EXAMPLES

STAMPING AND PRESS TRANSFER
Most sheet metals are coated with an oily surface, so the suction cups must be oil resistant.

PARTS HANDLING AND PLACING
In the automotive industry, part shapes and sizes vary so widely that a variety of sizes and models of suction cups is required to accommodate all applications. Mark free cups are preferred.

LIFTING FORCES & TECHNICAL DATA

SUCTION CUPS B

Model	Outer Dia	Lifting force vertical to the surface, lbf, at vacuum level			Lifting force parallel to the surface, lbf, at vacuum level			Volume	Min. curve radius	Max. vertical movement
	in	6 -inHg	18 -inHg	27 -inHg	6 -inHg	18 -inHg	27 -inHg	in³	in	in
B5	0.22	0.07	0.18	0.22	—	—	—	0.003	0.06	0.06
B8	0.35	0.18	0.36	0.96	—	—	—	0.009	0.07	0.14
B10-2	0.43	0.34	0.76	1.10	—	—	—	0.03	0.16	0.18
B15-2	0.61	0.65	1.33	2.00	—	—	—	0.07	0.20	0.26
B20	0.87	1.33	2.20	3.15	—	—	—	0.16	0.39	0.39
B30	1.30	2.70	4.95	6.07	—	—	—	0.61	0.60	0.60
B30-2	1.34	2.70	4.95	6.07	—	—	—	0.61	0.60	0.60
B40	1.69	4.95	8.77	11.0	—	—	—	0.90	0.79	0.60
B50/B50-2	2.09	7.42	14.6	18.4	—	—	—	1.95	1.18	0.51
B75/B75-2	3.07	16.6	37.5	50.8	—	—	—	6.70	1.60	0.94
B110/B110-2	4.53	30.8	77.1	104	—	—	—	19.0	2.40	1.40
B150	6.10	66.1	154	199	—	—	—	40.0	3.00	1.77

SUCTION CUPS B DURAFLEX®

Model	Outer Dia	Lifting force vertical to the surface, lbf, at vacuum level			Lifting force parallel to the surface, lbf, at vacuum level			Volume	Min. curve radius	Max. vertical movement
	in	6 -inHg	18 -inHg	27 -inHg	6 -inHg	18 -inHg	27 -inHg	in³	in	in
B75P, PU30°/60°	3.11	13.7	33.5	45.4	9.89	21.6	25.6	6.71	1.77	0.79
B75P, PU60°	3.11	18.7	44.1	57.3	27.2	49.5	67.0	6.71	1.77	0.79

SUCTION CUPS BF DURAFLEX®

Model	Outer Dia	Lifting force vertical to the surface, lbf, at vacuum level			Lifting force parallel to the surface, lbf, at vacuum level			Volume	Min. curve radius	Max. vertical movement
	in	6 -inHg	18 -inHg	27 -inHg	6 -inHg	18 -inHg	27 -inHg	in³	in	in
BF80P, PU30°/50°	3.31	16.4	35.3	44.1	12.1	19.8	26.3	2.44	5.20	0.63
BF80P, PU60°	3.31	22.0	50.6	66.1	15.3	28.6	37.3	2.44	5.20	0.63
BF110P, PU30°/60°	4.53	28.8	51.5	50.6	23.8	47.2	55.3	6.71	2.17	0.94
BF110P, PU60°	4.53	36.2	75.1	65.9	27.7	51.9	68.6	6.71	2.76	0.94

SUCTION CUPS BL

Model	Outer Dia	Lifting force vertical to the surface, lbf, at vacuum level			Lifting force parallel to the surface, lbf, at vacuum level			Volume	Min. curve radius	Max. vertical movement
	in	6 -inHg	18 -inHg	27 -inHg	6 -inHg	18 -inHg	27 -inHg	in³	in	in
BL20-2	0.79	0.07/0.70*	0.14/1.40*	—	—	—	—	0.24	0.16	0.51
BL30-2	1.18	0.14/1.40*	0.36/3.60*	—	—	—	—	0.79	0.31	0.79
BL40-2	1.57	0.25/2.50*	0.49/4.90*	—	—	—	—	1.60	0.60	1.30
BL50-2	1.89	0.38/3.80*	0.97/9.70*	—	—	—	—	3.36	0.59	1.34
B-BL40-2	1.57	0.25/2.50*	0.49/4.90*	—	—	—	—	1.60	0.60	1.30
BL40-4	1.58	2.25	3.37	4.95	2.02**	3.60**	5.85**	0.92	0.59	0.71

**Lifting force with reinforcement rings. **The suction cup is not intended for handling shear lifts. The values are given as a dimensioning guide to be used when, e.g., the acceleration/retardation causes shear forces.*

SUCTION CUPS BL DURAFLEX®

Model	Outer Dia	Lifting force vertical to the surface, lbf, at vacuum level			Lifting force parallel to the surface, lbf, at vacuum level			Volume	Min. curve radius	Max. vertical movement
	in	6 -inHg	18 -inHg	27 -inHg	6 -inHg	18 -inHg	27 -inHg	in³	in	in
BL30-3P, PU 30°/70°	1.18	2.25	4.95	6.29	2.02*	2.25*	3.60*	0.85	0.24	0.55
BL40-3P, PU 30°/70°	1.57	4.50	9.67	12.4	2.92*	5.40*	8.09*	1.65	0.51	0.83
BL50-3P, PU 30°/70°	1.97	5.40	13.5	16.9	4.95*	11.0*	13.5*	3.30	0.63	1.02

**The suction cup is not intended for handling shear lifts. The values are given as a dimensioning guide to be used when, e.g., the acceleration/retardation causes shear forces.*

SUCTION CUPS B-MF

Model	Outer Dia	Lifting force vertical to the surface, lbf, at vacuum level			Lifting force parallel to the surface, lbf, at vacuum level			Volume	Min. curve radius	Max. vertical movement
	in	6 -inHg	18 -inHg	27 -inHg	6 -inHg	18 -inHg	27 -inHg	in³	in	in
B15MF	0.63	0.90	1.80	2.70	1.01	1.57	2.25	0.07	0.43	0.08
B20MF	0.87	1.01	3.48	4.72	1.42	2.47	4.27	0.16	0.43	0.31
B30MF	1.34	2.70	8.99	12.3	3.20	7.19	9.22	0.60	0.65	0.47
B40MF	1.65	4.05	12.8	16.2	3.06	8.99	10.6	0.90	0.87	0.43
B50MF	2.09	6.74	20.9	30.6	5.17	14.2	21.8	1.95	1.00	0.51

SUCTION CUPS BX DURAFLEX®

Model	Outer Dia	Lifting force vertical to the surface, lbf, at vacuum level			Lifting force parallel to the surface, lbf, at vacuum level			Volume	Min. curve radius	Max. vertical movement
	in	6 -inHg	18 -inHg	27 -inHg	6 -inHg	18 -inHg	27 -inHg	in³	in	in
BX25P, PU30°/60°	1.02	1.80	2.92	4.05	1.12*	2.25*	2.70*	0.18	0.31	0.33
BX25P, PU60°	1.02	2.02	3.15	4.05	1.57*	2.47*	3.37*	0.18	0.31	0.33
BX35P, PU30°/60°	1.46	2.70	4.50	6.29	2.70*	4.50*	6.29*	0.61	0.39	0.55
BX35P, PU60°	1.46	3.37	5.62	6.74	4.95*	6.74*	8.09*	0.61	0.39	0.55
BX52P, PU30°/60°	2.09	7.19	12.6	16.9	6.29*	9.89*	12.1*	1.83	1.26	0.75
BX52P, PU60°	2.09	8.32	13.3	18.0	6.07*	11.0*	12.6*	1.83	1.26	0.75
BX75P, PU30°/60°	3.05	13.9	24.7	31.7	8.77*	18.7*	26.1*	4.88	0.91	1.02
BX75P, PU60°	3.05	18.0	27.0	37.3	17.5*	25.6*	33.7*	4.88	0.91	1.02
BX110P, PU30°/60°	4.48	35.5	68.8	77.8	18.7*	58.0*	58.5*	14.0	2.17	1.54
BX110P, PU60°	4.48	40.7	95.8	95.3	35.5*	54.9*	65.9*	14.0	2.17	1.54

**The suction cup is not intended for handling shear lifts. The values are given as a dimensioning guide to be used when, e.g., the acceleration/ retardation causes shear forces.*

SUCTION CUPS D

Model	Outer Dia	Lifting force vertical to the surface, lbf, at vacuum level			Lifting force parallel to the surface, lbf, at vacuum level			Volume	Min. curve radius	Max. vertical movement
	in	6 -inHg	18 -inHg	27 -inHg	6 -inHg	18 -inHg	27 -inHg	in³	in	in
D15-2	0.63	0.65	1.75	2.47	—	—	—	0.05	0.24	0.12
D20-2	0.87	1.33	3.37	4.05	—	—	—	0.15	0.31	0.18
D30-2	1.26	3.15	5.85	6.97	—	—	—	0.30	0.51	0.20
D50	2.09	8.09	17.5	22.0	—	—	—	0.92	0.98	0.39

SUCTION CUP DF DURAFLEX®

Model	Outer Dia	Lifting force vertical to the surface, lbf, at vacuum level			Lifting force parallel to the surface, lbf, at vacuum level			Volume	Min. curve radius	Max. vertical movement
	in	6 -inHg	18 -inHg	27 -inHg	6 -inHg	18 -inHg	27 -inHg	in³	in	in
DF80P, PU60°	3.11	15.7	43.8	60.7	16.9	32.6	43.8	2.93	2.36	0.55

SUCTION CUPS F

Model	Outer Dia	Lifting force vertical to the surface, lbf, at vacuum level			Lifting force parallel to the surface, lbf, at vacuum level			Volume	Min. curve radius	Max. vertical movement
	in	6 -inHg	18 -inHg	27 -inHg	6 -inHg	18 -inHg	27 -inHg	in³	in	in
F15	0.62	0.79	1.91	2.47	0.79	1.46	1.69	0.02	0.51	0.04
F20	0.87	1.35	3.26	4.27	1.12	1.80	1.91	0.06	0.71	0.06
F25	1.06	2.02	4.38	5.62	1.80	2.02	2.25	0.07	0.87	0.06
F30-2	1.26	2.70	5.62	6.97	2.50	3.60	4.50	0.12	0.98	0.08
F40-2	1.65	4.50	8.99	11.2	3.37	5.62	6.74	0.29	2.00	0.10
F50-2	2.09	8.09	16.6	21.6	5.40	8.99	11.2	0.60	2.17	0.12
F75	3.03	18.0	45.0	60.7	13.5	24.7	31.5	1.20	5.91	0.12
F110	4.41	31.5	94.4	126	31.5	56.2	67.4	4.30	9.84	0.16
F150	5.98	67.4	191	247	56.2	135	180	9.80	19.7	0.24

SUCTION CUPS F DURAFLEX®

Model	Outer Dia	Lifting force vertical to the surface, lbf, at vacuum level			Lifting force parallel to the surface, lbf, at vacuum level			Volume	Min. curve radius	Max. vertical movement
	in	6 -inHg	18 -inHg	27 -inHg	6 -inHg	18 -inHg	27 -inHg	in³	in	in
F75P, PU30°/60°	3.03	15.7	43.4	61.4	9.89	39.6	69.2	1.16	5.91	0.08
F75P, PU60°	3.03	18.4	51.9	74.2	10.6	25.4	38.0	1.16	5.91	0.08
F110P, PU30°/60°	4.53	37.5	97.1	133	33.5	99.1	139	3.66	9.84	0.16
F110P, PU60°	4.53	42.9	112	158	66.8	118	149	3.66	9.84	0.16

SUCTION CUPS FC DURAFLEX®

Model	Outer Dia	Lifting force vertical to the surface, lbf, at vacuum level			Lifting force parallel to the surface, lbf, at vacuum level			Volume	Min. curve radius	Max. vertical movement
	in	6 -inHg	18 -inHg	27 -inHg	6 -inHg	18 -inHg	27 -inHg	in³	in	in
FC20P, PU50°	0.87	1.01	2.70	3.60	1.01	2.02	2.70	0.06	0.98	0.07
FC25P, PU50°	1.12	1.80	4.50	6.07	2.02	2.70	4.05	0.18	1.77	0.16
FC35P, PU50°	1.38	2.50	8.10	11.5	6.10	11.5	13.9	0.31	1.26	0.22
FC35P, PU60°	1.38	2.50	7.60	11.0	6.10	9.20	11.5	0.31	1.26	0.22
FC50P, PU40°	1.97	6.29	17.3	23.2	11.0	18.4	22.5	0.61	2.09	0.20
FC50P, PU60°	1.97	6.29	17.3	23.4	11.7	20.9	25.0	0.61	2.09	0.20
FC75P, PU40°	2.95	16.4	35.3	48.3	24.1	45.0	51.7	1.83	3.07	0.26
FC75P, PU60°	2.95	16.4	37.3	50.6	20.9	50.6	57.3	1.83	3.07	0.26
FC100P, PU40°	3.94	30.8	63.8	84.8	40.0	71.5	94.4	4.88	4.33	0.40
FC100P, PU60°	3.94	34.2	73.7	100	25.2	59.3	85.9	4.88	4.33	0.40
FC150P, PU40°	5.91	61.6	161	210	77.1	172	203	15.3	6.50	0.56
FC150P, PU60°	5.91	63.8	145	207	48.3	128	194	15.3	6.50	0.56

SUCTION CUPS F-MF

Model	Outer Dia	Lifting force vertical to the surface, lbf, at vacuum level			Lifting force parallel to the surface, lbf, at vacuum level			Volume	Min. curve radius	Max. vertical movement
	in	6 -inHg	18 -inHg	27 -inHg	6 -inHg	18 -inHg	27 -inHg	in³	in	in
F15MF	0.62	0.90	1.80	2.70	1.01	2.02	3.26	0.02	0.67	0.04
F20MF	0.87	0.81	3.26	4.95	1.80	3.26	4.76	0.06	0.71	0.08
F25MF	1.06	1.42	5.51	7.98	2.02	5.51	8.16	0.07	0.90	0.06
F30MF	1.26	2.47	7.76	10.8	3.06	6.29	9.44	0.12	1.70	0.06
F40MF	1.65	4.05	12.8	18.7	3.60	11.0	12.8	0.29	2.40	0.08
F50MF	2.09	5.51	20.7	31.0	6.97	18.4	24.1	0.61	3.70	0.08

SUCTION CUPS FP

Model	Outer Dia	Lifting force vertical to the surface, lbf, at vacuum level			Lifting force parallel to the surface, lbf, at vacuum level			Volume	Min. curve radius	Max. vertical movement
	in	6 -inHg	18 -inHg	27 -inHg	6 -inHg	18 -inHg	27 -inHg	in³	in	in
FP200	9.37	169	427	607	—	—	—	33.0	—	0.28
FP300	13.7	360	967	1,439	—	—	—	78.4	—	0.28

SUCTION CUPS OB DURAFLEX®

Model	Outer Dia	Lifting force vertical to the surface, lbf, at vacuum level			Lifting force parallel to the surface, lbf, at vacuum level			Volume	Min. curve radius	Max. vertical movement
	in	6 -inHg	18 -inHg	27 -inHg	6 -inHg	18 -inHg	27 -inHg	in³	in	in
OB20x60P, PU60°	0.93x2.44	2.92	7.64	12.8	2.92	8.32	10.8	1.46	0.28	0.18
OB35x90P, PU30°/60°	1.67x3.76	8.54	22.0	30.1	14.8	34.6	46.3	2.20	0.98	0.31
OB35x90P, PU60°	1.67x3.76	6.29	20.5	32.6	12.6	34.4	48.3	2.20	0.79	0.31
OB50x140P, PU30°/60°	2.32x5.75	13.0	52.8	82.3	24.7	58.5	78.5	5.80	0.91	0.44
OB50x140P, PU60°	2.32x5.75	17.3	51.9	82.7	27.4	65.6	89.0	5.80	1.02	0.44
OB65x170P, PU30°/60°	2.99x6.97	26.8	75.3	122	31.7	85.2	120	10.7	1.50	0.63
OB65x170P, PU60°	2.99x6.97	29.2	69.7	120	38.2	98.9	135	10.7	1.50	0.63

SUCTION CUPS OC

Model	Outer Dia	Lifting force vertical to the surface, lbf, at vacuum level			Lifting force parallel to the surface, lbf, at vacuum level			Volume	Min. curve radius	Max. vertical movement
	in	6 -inHg	18 -inHg	27 -inHg	6 -inHg	18 -inHg	27 -inHg	in³	in	in
OC60x140	2.50x5.43	29.7	83.9	117	41.8	83.9	115	3.17	7.87	0.30

SUCTION CUPS OC DURAFLEX®

Model	Outer Dia	Lifting force vertical to the surface, lbf, at vacuum level			Lifting force parallel to the surface, lbf, at vacuum level			Volume	Min. curve radius	Max. vertical movement
	in	6 -inHg	18 -inHg	27 -inHg	6 -inHg	18 -inHg	27 -inHg	in³	in	in
OC35x90P, PU40°	1.46X3.70	11.0	26.3	38.4	11.9	25.2	33.0	1.22	—	0.12
OC35x90P, PU60°	1.46X3.70	11.0	29.7	38.4	15.3	36.2	46.3	1.22	—	0.12

SUCTION CUPS OF DURAFLEX®

Model	Outer Dia	Lifting force vertical to the surface, lbf, at vacuum level			Lifting force parallel to the surface, lbf, at vacuum level			Volume	Min. curve radius	Max. vertical movement
	in	6 -inHg	18 -inHg	27 -inHg	6 -inHg	18 -inHg	27 -inHg	in³	in	in
OF10x30P, PU50°	0.43x1.21	0.90	2.47	3.82	1.35	2.70	3.82	0.03	0.59	0.04
OF15x45P, PU50°	0.59x1.77	2.02	6.07	9.22	1.35	4.50	7.64	0.06	1.18	0.04
OF25x70P, PU40°	1.07x2.85	5.40	14.8	24.1	10.3	20.2	23.6	0.37	1.97	0.07
OF25x70P, PU60°	1.07x2.85	5.40	17.3	26.5	9.44	28.6	36.2	0.37	1.97	0.07
OF40x110P, PU40°	1.69x4.45	15.5	45.6	65.9	27.0	51.7	66.5	1.28	3.03	0.12
OF40x110P, PU60°	1.69x4.45	16.6	45.0	68.1	22.0	51.3	92.2	1.28	3.03	0.12
OF55x150P, PU40°	2.32x6.06	29.4	82.3	118	34.8	78.7	102	2.26	5.91	0.12
OF55x150P, PU60°	2.32x6.06	30.1	84.5	125	28.8	76.0	107	2.26	5.91	0.12
OF70x175P, PU40°	2.65x6.35	42.7	119	176	38.2	98.9	142	4.88	5.12	0.22
OF70x175P, PU60°	2.65x6.35	40.5	128	193	45.0	125	169	4.88	5.12	0.22

SUCTION CUPS OP

Model	Outer Dia	Lifting force vertical to the surface, lbf, at vacuum level			Lifting force parallel to the surface, lbf, at vacuum level			Volume	Min. curve radius	Max. vertical movement
	in	6 -inHg	18 -inHg	27 -inHg	6 -inHg	18 -inHg	27 -inHg	in³	in	in
OP20x100	1.22x4.37	5.62	18.0	24.7	—	—	—	0.85	—	0.06
OP40x200	2.01x8.31	22.5	71.9	98.8	—	—	—	3.42	—	0.10

SUCTION CUPS P

Model	Outer Dia	Lifting force vertical to the surface, lbf, at vacuum level			Lifting force parallel to the surface, lbf, at vacuum level			Volume	Min. curve radius	Max. vertical movement
	in	6 -inHg	18 -inHg	27 -inHg	6 -inHg	18 -inHg	27 -inHg	in³	in	in
P35	1.67	4.50	11.2	15.7	—	—	—	0.37	—	0.12
P60	2.66	13.5	33.7	49.5	—	—	—	1.22	—	0.12
P100	4.23	40.5	101	148	—	—	—	3.36	—	0.12
P200	8.46	169	427	607	—	—	—	33.1	—	0.20
P300	12.4	360	967	1,439	—	—	—	78.4	—	0.20

SUCTION CUPS U

Model	Outer Dia	Lifting force vertical to the surface, lbf, at vacuum level			Lifting force parallel to the surface, lbf, at vacuum level			Volume	Min. curve radius	Max. vertical movement
	in	6 -inHg	18 -inHg	27 -inHg	6 -inHg	18 -inHg	27 -inHg	in³	in	in
U2	0.10	0.007	0.02	0.03	—	—	—	0.0002	0.16	0.004
U3	0.15	0.02	0.09	0.15	—	—	—	0.0003	0.20	0.006
U4	0.20	0.05	0.20	0.29	0.05	0.18	0.22	0.002	0.12	0.008
U6	0.28	0.11	0.38	0.56	0.11	0.34	0.45	0.003	0.20	0.012
U8	0.35	0.22	0.65	0.88	0.22	0.65	0.76	0.006	0.24	0.02
U10	0.43	0.34	0.99	1.55	0.34	0.99	1.10	0.01	0.32	0.02
U15	0.65	0.79	1.89	2.47	0.79	1.21	1.33	0.03	0.31	0.06
U20	0.86	1.33	2.70	3.60	1.33	1.98	2.20	0.06	0.51	0.10
U30	1.26	2.70	5.62	6.74	1.75	2.20	2.47	0.12	0.79	0.13
U40-2	1.61	4.50	8.77	11.0	3.15	4.95	6.07	0.33	1.18	0.18
U50-2	2.02	7.87	16.4	20.7	4.50	8.32	9.89	0.73	1.38	0.24

MATERIAL SPECIFICATIONS

Model	Material	Color	Hardness Shore	Working temperature
B5, B8, D15-2, D20-2, D30-2, D50, F15, F20, F25, F30-2, U4, U6, U8, U10, U15, U20	Chloroprene, CR	Black	50°	-40°F–230°F
B10-2, B15-2, B20, B30-2, B40, BL20-2, BL30-2, BL40-2, BL50-2	Chloroprene, CR	Black	60°	-40°F–230°F
B5, B8, B10-2, B15-2, B20, B30-2, B40, B50, B50-2, B75, B75-2, B110, B110-2, B150, BL20-2, BL30-2, BL40-2, BL50-2, D15-2, D20-2, D30-2, D50, F15, F20, F25, F30-2, F40-2, F50-2, F75, F110, F150, U4, U6, U8, U10, U15, U20, U30, U40-2, U50-2	Silicone, SIL	Red	50°	-40°F–392°F
B5, B8, U2, U3	Conductive silicone, CSIL	Black	50°	-67°F–446°F
B-BL40-2	Silicone, SIL	White	30°	-40°F–392°F
BL40-4	Silicone, SIL	Red	40°	-76°F–392°F
B50, B50-2, B75, B75-2, B110, B110-2, B150, F40-2, F50-2, F75, F110, F150, U30, U40-2, U50-2	Nitrile-PVC, NPV	Black	50°	32°F–194°F
B15MF, B20MF, B30MF, B40MF, B50MF ,F15MF, F20MF, F25MF, F30MF, F40MF, F50MF	Thermoelastic polyurethane, TPU	White transparent	81°	-4°F–176°F
FP200, FP300	Polyurethane, PUR	Yellow-white transparent	65°	32°F–176°F
P35, P60, P100, P200, P300, OP20x100, OP40x200	Ethylene propylene, EPDM	Grey	—	-40°F–212°F
BF110P, BX25P, BX35P, BX52P, BX75P, BX110P, B75P, F75P, F110P, OB35x90P, OB50x140P, OB65x170P, OF25x70P, OF40x110P, OF55x150P, OF70x175P	Polyurethane, PU	Yellow/green transparent	30°/60°	50°F–122°F
BF80P	Polyurethane, PU	Yellow/blue transparent	30°/50°	50°F–122°F
FC50P, FC75P, OC35x90P	Polyurethane, PU	Red transparent	40°	50°F–122°F
FC20P, FC25P, FC35P, OF10x30P, OF15x45P	Polyurethane, PU	Blue transparent	50°	50°F–122°F
BF110P, BF80P, B75P, BX25P, BX35P, BX52P, BX75P, BX110P, DF80P, F75P, F110P, FC35P,FC50P, FC75P, FC100P, FC150P, OB20x60P, OB35x90P, OB50x140P, OB65x170P, OBL40x90P, OF40x110P, OF55x150P, OF70x175POBL40x90P, OC35x90P	Polyurethane, PU	Green transparent	60°	50°F–122°F
OC60X140	Nitrile, NBR	Black	50°	20°F–225°F
B30-2, B40, B50, B75, B110, F50-2, F75, F110	HNBR	Grey-blue	75°	-22°F–284°F*
BL30-3P, BL40-3P, BL50-3P	Polyurethane, PU	Yellow/black	30°/70°	50°F–122°F

**For a shorter period of time up to 320 °F*

MATERIAL RESISTANCE

MATERIAL RESISTANCE

Material	Wear resistance	Oil	Weather & ozone	Hydrolysis	Gasoline	Concentrated acids	Alcohol	Oxidation
Chloroprene, CR	Excellent	Fair	Good	Good	Fair	Poor	Good	Good
Silicone, SIL	Good	Poor	Excellent	Fair	Poor	Poor	Good	Excellent
Conductive silicone, CSIL	Good	Poor	Excellent	Fair	Poor	Poor	Good	Excellent
Nitrile-PVC, NPV	Excellent	Excellent	Good	Good	Excellent	Fair	Good	Good
Thermoelastic polyurethane, TPU	Excellent	Excellent	Excellent	Poor	Poor	Poor	Good	Good
Polyurethane, PUR	Excellent	Excellent	Excellent	Poor	Fair	Poor	Fair	Good
Ethylene propylene, EPDM	Fair	Poor	Excellent	Good	Poor	Poor	Excellent	Excellent
Nitrile, NBR	Excellent	Excellent	Fair	Good	Good	Fair	Good	Good
HNBR	Excellent	Excellent	Excellent	Good	Excellent	Fair	Good	Excellent

Material	Wear resistance	Oil	Weather & ozone	Hydrolysis	Gasoline	Concentrated acids	Ethanol	Methanol	Oxidation
Polyurethane, PU	Excellent	Excellent	Excellent	Fair*	Fair	Fair*	Fair	Poor	Poor

**Please contact PIAB.*

EXAMPLES OF APPLICATIONS

	Chloroprene	Silicone	Conductive silicone	Nitrile-PVC	Nitrile	Polyurethane			Ethylene propylene	HNBR
	CR	SIL	CSIL	NPV	NBR	PU	PUR	TPU	EPDM	HNBR
Food-stuff		X								
Oily objects	X			X	X	X	X	X		X
Mark free requirements						X	X	X		
High temperature environments		X	X							X
Low temperature environments	X	X	X							X
Rough/uneven surfaces									X	
Electrical components			X						X	
Sensitivity to static electricity			X							

B5

SUCTION CUP WITH SHORT BELLOWS

- Lifting movement to separate small and thin objects.
- Only lightweight objects should be handled when the lifting force is parallel to the surface.
- Suitable for level adjustment.
- Suction cups of conductive silicone are suitable for objects with sensitivity to static electricity.

LIFTING FORCES & TECHNICAL DATA

Outer Dia.	Lifting force vertical to the surface, lbf, at vacuum level			Lifting force parallel to the surface, lbf, at vacuum level			Volume	Min. curve radius	Max. vertical movement	Weight rubber part
in	6 -inHg	18 -inHg	27 -inHg	6 - inHg	18 -inHg	27 -inHg	in³	in	in	oz
0.22	0.07	0.18	0.22	—	—	—	0.003	0.06	0.06	0.004

MATERIAL SPECIFICATIONS

Material	Color	Hardness, °Shore A	Temperature range, °F
Chloroprene, CR	Black	50	-40–230
Silicone, SIL	Red	50	-40–392
Conductive silicone, CSIL	Black	50	-67–446

MATERIAL RESISTANCE

Material	Wear resistance	Oil	Weather & ozone	Hydrolysis	Gasoline	Concentrated acids	Alcohol	Oxidation
Chloroprene, CR	Excellent	Fair	Good	Good	Fair	Poor	Good	Good
Silicone, SIL	Good	Poor	Excellent	Fair	Poor	Poor	Good	Excellent
Conductive silicone, CSIL	Good	Poor	Excellent	Fair	Poor	Poor	Good	Excellent

ORDERING INFORMATION

Suction cups with fitting	Weight (oz)	Part No.
Suction cup B5 Chloroprene, M5 male	0.064	B5.10.01AB
Suction cup B5 Silicone, M5 male	0.064	B5.20.01AB
Suction cup B5 Conductive silicone, M5 male	0.064	B5.25.01AB

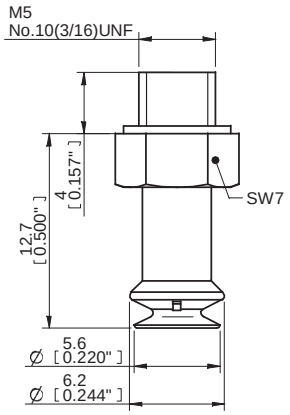

Rubber parts	Part No.
Suction cup B5 Chloroprene	B5.10
Suction cup B5 Silicone	B5.20
Suction cup B5 Conductive silicone	B5.25

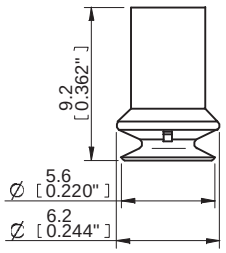

Fittings	Part No.
Fitting M5 male	01AB

B8

SUCTION CUP WITH SHORT BELLOWS

- Lifting movement to separate small and thin objects.
- Only lightweight objects should be handled when the lifting force is parallel to the surface.
- Suitable for level adjustment.
- Suction cups of conductive silicone are suitable for objects with sensitivity to static electricity.

LIFTING FORCES & TECHNICAL DATA

Outer Dia.	Lifting force vertical to the surface, lbf, at vacuum level			Lifting force parallel to the surface, lbf, at vacuum level			Volume	Min. curve radius	Max. vertical movement	Weight rubber part
in	6 -inHg	18 -inHg	27 -inHg	6 -inHg	18 -inHg	27 -inHg	in³	in	in	oz
0.35	0.18	0.36	0.96	—	—	—	0.009	0.07	0.14	0.01

MATERIAL SPECIFICATIONS

Material	Color	Hardness, °Shore A	Temperature range, °F
Chloroprene, CR	Black	50	-40–230
Silicone, SIL	Red	50	-40–392
Conductive silicone, CSIL	Black	50	-67–446

MATERIAL RESISTANCE

Material	Wear resistance	Oil	Weather & ozone	Hydrolysis	Gasoline	Concentrated acids	Alcohol	Oxidation
Chloroprene, CR	Excellent	Fair	Good	Good	Fair	Poor	Good	Good
Silicone, SIL	Good	Poor	Excellent	Fair	Poor	Poor	Good	Excellent
Conductive silicone, CSIL	Good	Poor	Excellent	Fair	Poor	Poor	Good	Excellent

ORDERING INFORMATION

Suction cups with fitting	Weight (oz)	Part No.
Suction cup B8 Chloroprene, M5 male	0.07	B8.10.01AB
Suction cup B8 Silicone, M5 male	0.07	B8.20.01AB
Suction cup B8 Conductive silicone, M5 male	0.07	B8.25.01AB

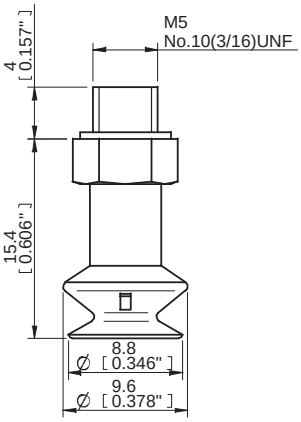

Rubber parts	Part No.
Suction cup B8 Chloroprene	B8.10
Suction cup B8 Silicone	B8.20
Suction cup B8 Conductive silicone	B8.25

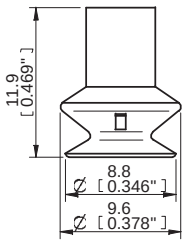

Fittings	Part No.
Fitting M5 male	01AB

B10-2

SUCTION CUP WITH SHORT BELLOWS

- Suitable for level adjustment.
- Lifting movement to separate small and thin objects.
- Only lightweight objects should be handled when the lifting force is parallel to the surface.

LIFTING FORCES & TECHNICAL DATA

Outer Dia.	Lifting force vertical to the surface, lbf, at vacuum level			Lifting force parallel to the surface, lbf, at vacuum level			Volume	Min. curve radius	Max. vertical movement	Weight rubber part
in	6 -inHg	18 -inHg	27 -inHg	6 -inHg	18 -inHg	27 -inHg	in³	in	in	oz
0.43	0.34	0.76	1.10	—	—	—	0.03	0.16	0.18	0.04

MATERIAL SPECIFICATIONS

Material	Color	Hardness, °Shore A	Temperature range, °F
Chloroprene, CR	Black	60	-40–230
Silicone, SIL	Red	50	-40–392

MATERIAL RESISTANCE

Material	Wear resistance	Oil	Weather & ozone	Hydrolysis	Gasoline	Concentrated acids	Alcohol	Oxidation
Chloroprene, CR	Excellent	Fair	Good	Good	Fair	Poor	Good	Good
Silicone, SIL	Good	Poor	Excellent	Fair	Poor	Poor	Good	Excellent

ORDERING INFORMATION

Suction cups with fitting	Weight (oz)	Part No.
Suction cup B10-2 Chloroprene, M5 male	0.12	B10-2.10.01AC
Suction cup B10-2 Silicone, M5 male	0.12	B10-2.20.01AC

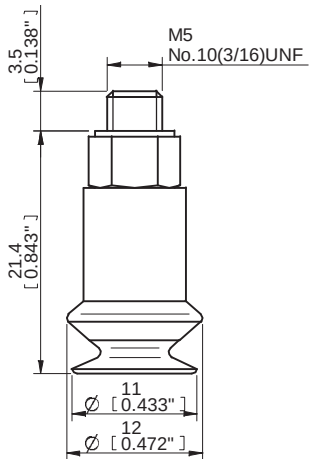

Rubber parts	Part No.
Suction cup B10-2 Chloroprene	B10-2.10
Suction cup B10-2 Silicone	B10-2.20

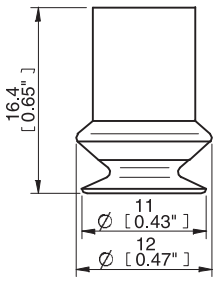

Fittings	Part No.
Fitting M5 male	01AC

B15-2

SUCTION CUP WITH SHORT BELLOWS

- Suitable for level adjustment.
- Lifting movement to separate small and thin objects.
- Only lightweight objects should be handled when the lifting force is parallel to the surface.

LIFTING FORCES & TECHNICAL DATA

Outer Dia.	Lifting force vertical to the surface, lbf, at vacuum level			Lifting force parallel to the surface, lbf, at vacuum level			Volume	Min. curve radius	Max. vertical movement	Weight rubber part
in	6 -inHg	18 -inHg	27 -inHg	6 -inHg	18 -inHg	27 -inHg	in³	in	in	oz
0.61	0.65	1.33	2.00	—	—	—	0.07	0.20	0.26	0.05

MATERIAL SPECIFICATIONS

Material	Color	Hardness, °Shore A	Temperature range, °F
Chloroprene, CR	Black	60	-40–230
Silicone, SIL	Red	50	-40–392

MATERIAL RESISTANCE

Material	Wear resistance	Oil	Weather & ozone	Hydrolysis	Gasoline	Concentrated acids	Alcohol	Oxidation
Chloroprene, CR	Excellent	Fair	Good	Good	Fair	Poor	Good	Good
Silicone, SIL	Good	Poor	Excellent	Fair	Poor	Poor	Good	Excellent

ORDERING INFORMATION

Suction cups with fitting	Weight (oz)	Part No.
Suction cup B15-2 Chloroprene, M5 male	0.13	B15-2.10.01AC
Suction cup B15-2 Silicone, M5 male	0.13	B15-2.20.01AC

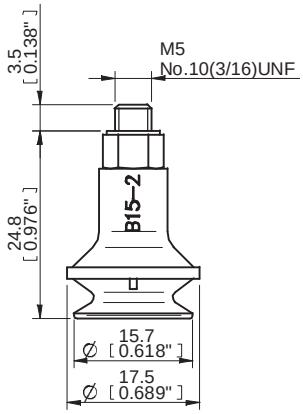

Rubber parts	Part No.
Suction cup B15-2 Chloroprene	B15-2.10
Suction cup B15-2 Silicone	B15-2.20

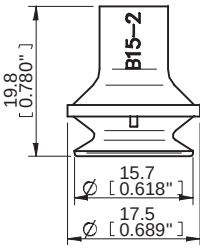

Fittings	Part No.
Fitting M5 male	01AC

B20

SUCTION CUP WITH SHORT BELLOWS

- Suitable for level adjustment. Several short bellows in one lifting device can handle objects with height differences and varying shapes, for example embossed or corrugated plates.
- The lifting movement can be used to separate small and thin objects.
- Only lightweight objects should be handled when the lifting force is parallel to the surface of the object, in order to achieve good precision and safe lifting movement.

LIFTING FORCES & TECHNICAL DATA

Outer Dia.	Lifting force vertical to the surface, lbf, at vacuum level			Lifting force parallel to the surface, lbf, at vacuum level			Volume	Min. curve radius	Max. vertical movement	Weight rubber part
in	6 -inHg	18 -inHg	27 -inHg	6 -inHg	18 -inHg	27 -inHg	in³	in	in	oz
0.87	1.33	2.20	3.15	—	—	—	0.16	0.39	0.39	0.11

MATERIAL SPECIFICATIONS

Material	Color	Hardness °Shore A	Temperature range °F
Chloroprene, CR	Black	60	-40–230
Silicone, SIL	Red	50	-40-392

MATERIAL RESISTANCE

Material	Wear resistance	Oil	Weather & ozone	Hydrolysis	Gasoline	Concentrated acids	Alcohol	Oxidation
Chloroprene, CR	Excellent	Fair	Good	Good	Fair	Poor	Good	Good
Silicone, SIL	Good	Poor	Excellent	Fair	Poor	Poor	Good	Excellent

ORDERING INFORMATION

	Suction cups with fitting	Weight (oz)	Part No.
A	Suction cup B20 Chloroprene, M5 female	0.22	B20.10.02AA
A	Suction cup B20 Chloroprene, 1/8" NPT male, with dual flow control valve	0.22	B20.10.02DC
B	Suction cup B20 Chloroprene, G1/8" male, with mesh filter	0.22	B20.10.02AB
B	Suction cup B20 Chloroprene, G1/8" male, with mesh filter and dual flow control valve	0.22	B20.10.02DB
B	Suction cup B20 Chloroprene, 1/8" NPT male, with mesh filter	0.22	B20.10.02AC
B	Suction cup B20 Chloroprene, 1/8" NPT male, with dual flow control valve	0.22	B20.10.02DC
C	Suction cup B20 Chloroprene, G1/8" male/M5 female	0.18	B20.10.02AD
C	Suction cup B20 Chloroprene, G1/8" male/M5 female, with mesh filter	0.18	B20.10.02AF
C	Suction cup B20 Chloroprene, G1/8" male/M5 female, with dual flow control valve	0.18	B20.10.02DD
D	Suction cup B20 Chloroprene, 5xM5 female	0.46	B20.10.02AE
D	Suction cup B20 Chloroprene, 5xM5 female, with dual flow control valve	0.46	B20.10.02DE
E	Suction cup B20 Chloroprene, G1/8" male/M5 female, PA	0.17	B20.10.02CD
A	Suction cup B20 Silicone, M5 female	0.22	B20.20.02AA
A	Suction cup B20 Silicone, M5 female, with dual flow control valve	0.22	B20.20.02DA
B	Suction cup B20 Silicone, G1/8" male, with mesh filter	0.22	B20.20.02AB
B	Suction cup B20 Silicone, G1/8" male, with mesh filter and dual flow control valve	0.22	B20.20.02DB
B	Suction cup B20 Silicone, 1/8" NPT male, with mesh filter	0.22	B20.20.02AC
B	Suction cup B20 Silicone, 1/8" NPT male, with dual flow control valve	0.22	B20.20.02DC
C	Suction cup B20 Silicone, G1/8" male/M5 female	0.18	B20.20.02AD
C	Suction cup B20 Silicone, G1/8" male/M5 female, with mesh filter	0.18	B20.20.02AF
C	Suction cup B20 Silicone, G1/8" male/M5 female, with dual flow control valve	0.18	B20.20.02DD
D	Suction cup B20 Silicone, 5xM5 female	0.46	B20.20.02AE
D	Suction cup B20 Silicone, 5xM5 female, with dual flow control valve	0.46	B20.20.02DE
E	Suction cup B20 Silicone, G1/8" male/M5 female, PA	0.17	B20.20.02CD

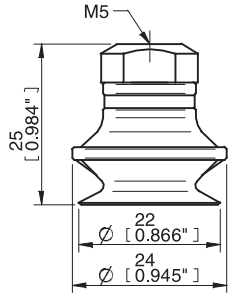

A

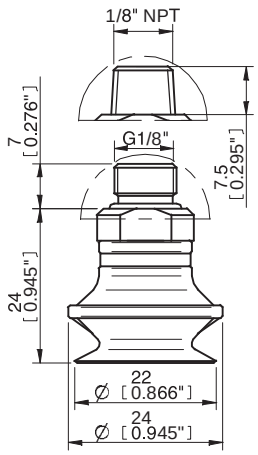

B

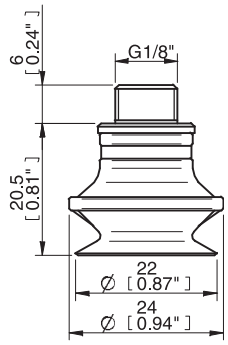

C

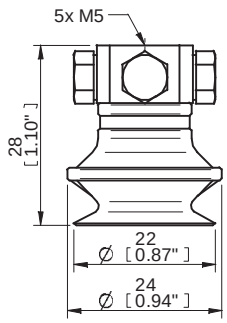

D

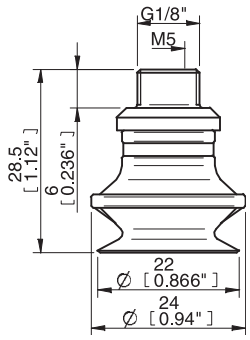

E

Rubber parts	Part No.
Suction cup B20 Chloroprene	B20.10
Suction cup B20 Silicone	B20.20

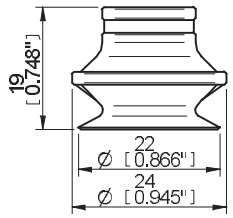

Fittings	Part No.
Fitting M5 female	02AA
Fitting M5 female, with dual flow control valve	02DA
Fitting G1/8" male, with mesh filter	02AB
Fitting G1/8" male, with mesh filter and dual flow control valve	02DB
Fitting 1/8" NPT male, with mesh filter	02AC
Fitting 1/8" NPT male, with dual flow control valve	02DC
Fitting G1/8" male/M5 female	02AD
Fitting G1/8" male/M5 female, with mesh filter	02AF
Fitting G1/8" male/M5 female, with dual flow control valve	02DD
Fitting 5xM5 female	02AE
Fitting 5xM5 female, with dual flow control valve	02DE
Fitting G1/8" male/M5 female, PA	02CD

B30

SUCTION CUP WITH SHORT BELLOWS

- Suitable for level adjustment. Several short bellows in one lifting device can handle objects with height differences and varying shapes, for example embossed or corrugated plates.
- The lifting movement can be used to separate small and thin objects.
- Only lightweight objects should be handled when the lifting force is parallel to the surface of the object, in order to achieve good precision and safe lifting movement.

LIFTING FORCES & TECHNICAL DATA

Outer Dia.	Lifting force vertical to the surface, lbf, at vacuum level			Lifting force parallel to the surface, lbf, at vacuum level			Volume	Min. curve radius	Max. vertical movement	Weight rubber part
in	6 -inHg	18 -inHg	27 -inHg	6 -inHg	18 -inHg	27 -inHg	in³	in	in	oz
1.30	2.70	4.95	6.07	—	—	—	0.61	0.60	0.60	0.25

MATERIAL SPECIFICATIONS

Material	Color	Hardness °Shore A	Temperature range °F
Chloroprene, CR	Black	60	-40–230
Silicone, SIL	Red	50	-40–392

MATERIAL RESISTANCE

Material	Wear resistance	Oil	Weather & Ozone	Hydrolysis	Gasoline	Concentrated acids	Alcohol	Oxidation
Chloroprene, CR	Excellent	Fair	Good	Good	Fair	Poor	Good	Good
Silicone, SIL	Good	Poor	Excellent	Fair	Poor	Poor	Good	Excellent

ORDERING INFORMATION

	Suction cups with fitting	Weight (oz)	Part No.
A	Suction cup B30 Chloroprene, M5 female	0.36	B30.10.02AA
A	Suction cup B30 Chloroprene, M5 female, with dual flow control valve	0.36	B30.10.02DA
B	Suction cup B30 Chloroprene, G1/8" male, with mesh filter	0.36	B30.10.02AB
B	Suction cup B30 Chloroprene, G1/8" male, with dual flow control valve	0.36	B30.10.02DB
B	Suction cup B30 Chloroprene, 1/8" NPT male, with mesh filter	0.36	B30.10.02AC
B	Suction cup B30 Chloroprene, 1/8" NPT male, with dual flow control valve	0.36	B30.10.02DC
C	Suction cup B30 Chloroprene, G1/8" male/M5 female	0.32	B30.10.02AD
C	Suction cup B30 Chloroprene, G1/8" male/M5 female, with mesh filter	0.32	B30.10.02AF
C	Suction cup B30 Chloroprene, G1/8" male/M5 female, with dual flow control valve	0.32	B30.10.02DD
D	Suction cup B30 Chloroprene, 5xM5 female	0.60	B30.10.02AE
D	Suction cup B30 Chloroprene, 5xM5 female, with dual flow control valve	0.60	B30.10.02DE
A	Suction cup B30 Silicone, M5 female	0.36	B30.20.02AA
A	Suction cup B30 Silicone, M5 female, with dual flow control valve	0.36	B30.20.02DA
B	Suction cup B30 Silicone, G1/8" male, with mesh filter	0.36	B30.20.02AB
B	Suction cup B30 Silicone, G1/8" male, with dual flow control valve	0.36	B30.20.02DB
B	Suction cup B30 Silicone, 1/8" NPT male, with mesh filter	0.36	B30.20.02AC
B	Suction cup B30 Silicone, 1/8" NPT male, with dual flow control valve	0.36	B30.20.02DC
C	Suction cup B30 Silicone, G1/8" male/M5 female	0.32	B30.20.02AD
C	Suction cup B30 Silicone, G1/8" male/M5 female, with mesh filter	0.32	B30.20.02AF
C	Suction cup B30 Silicone, G1/8" male/M5 female, with dual flow control valve	0.32	B30.20.02DD
D	Suction cup B30 Silicone, 5xM5 female	0.60	B30.20.02AE
D	Suction cup B30 Silicone, 5xM5 female, with dual flow control valve	0.60	B30.20.02DE

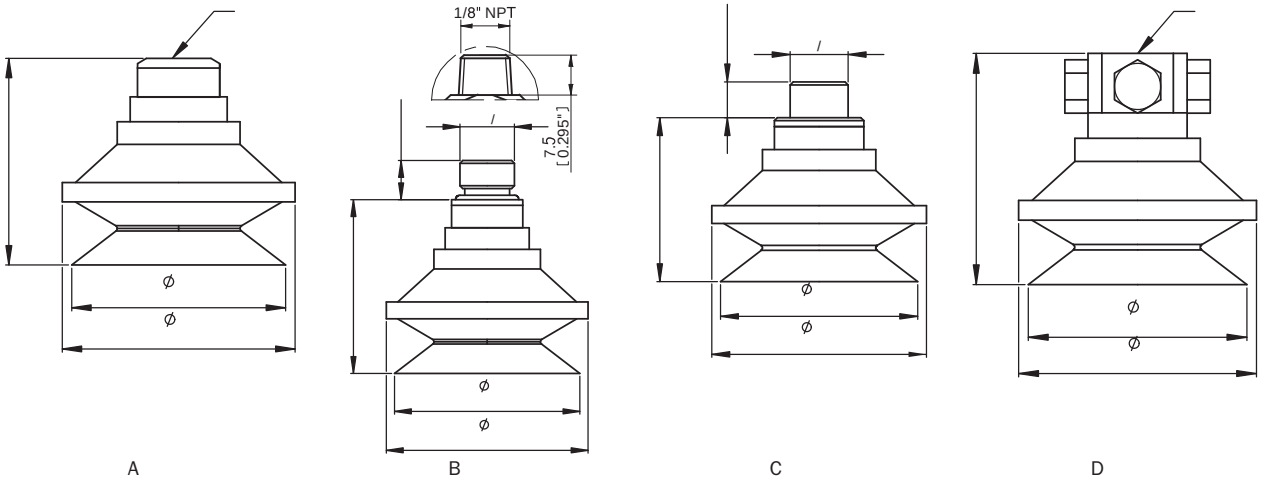

Rubber parts	Part No.
Suction cup B30 Chloroprene	B30.10
Suction cup B30 Silicone	B30.20

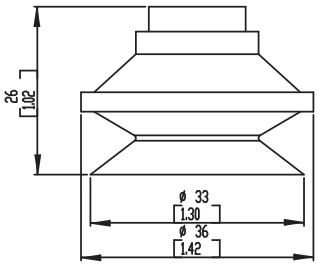

Fittings	Part No.
Fitting M5 female	02AA
Fitting M5 female, with dual flow control valve	02DA
Fitting G1/8" male, with mesh filter	02AB
Fitting G1/8" male, with mesh filter and dual flow control valve	02DB
Fitting 1/8" NPT male, with mesh filter	02AC
Fitting 1/8" NPT male, with dual flow control valve	02DC
Fitting G1/8" male/M5 female	02AD
Fitting G1/8" male/M5 female, with mesh filter	02AF
Fitting G1/8" male/M5 female, with dual flow control valve	02DD
Fitting 5xM5 female	02AE
Fitting 5xM5 female, with dual flow control valve	02DE

B30-2

SUCTION CUP WITH SHORT BELLOWS

- Suitable for level adjustment. Several short bellows in one lifting device can handle objects with height differences and varying shapes, for example embossed or corrugated plates.
- The lifting movement can be used to separate small and thin objects.
- Only lightweight objects should be handled when the lifting force is parallel to the surface of the object, in order to achieve good precision and safe lifting movement.

LIFTING FORCES & TECHNICAL DATA

Outer Dia.	Lifting force vertical to the surface, lbf, at vacuum level			Lifting force parallel to the surface, lbf, at vacuum level			Volume	Min. curve radius	Max. vertical movement	Weight rubber part
in	6 -inHg	18 -inHg	27 -inHg	6 -inHg	18 -inHg	27 -inHg	in³	in	in	oz
1.34	2.70	4.95	6.07	—	—	—	0.61	0.60	0.60	0.25

MATERIAL SPECIFICATIONS

Material	Color	Hardness, °Shore A	Temperature range, °F
Chloroprene, CR	Black	60	-40–230
Silicone, SIL	Red	50	-40–392
HNBR	Grey-blue	75	-22–284*

**For a shorter period of time up to 320 °F.*

MATERIAL RESISTANCE

Material	Wear resistance	Oil	Weather & Ozone	Hydrolysis	Gasoline	Concentrated acids	Alcohol	Oxidation
Chloroprene, CR	Excellent	Fair	Good	Good	Fair	Poor	Good	Good
Silicone, SIL	Good	Poor	Excellent	Fair	Poor	Poor	Good	Excellent
HNBR	Excellent	Excellent	Excellent	Good	Excellent	Fair	Good	Excellent

ORDERING INFORMATION

	Suction cups with fitting	Weight (oz)	Part No.
A	Suction cup B30-2 Chloroprene, 1/8"NPSF female	0.46	B30-2.10.04AA
A	Suction cup B30-2 Chloroprene, 1/8"NPSF female, with mesh filter	0.46	B30-2.10.04AG
A	Suction cup B30-2 Chloroprene, 1/8"NPSF female, with dual flow control valve	0.46	B30-2.10.04DA
B	Suction cup B30-2 Chloroprene, G1/4" male, with mesh filter	0.50	B30-2.10.04AB
B	Suction cup B30-2 Chloroprene, G1/4" male, with dual flow control valve	0.50	B30-2.10.04DB
B	Suction cup B30-2 Chloroprene, 1/4" NPTmale, with mesh filter	0.50	B30-2.10.04AC
B	Suction cup B30-2 Chloroprene, 1/4" NPT male, with dual flow control valve	0.50	B30-2.10.04DC
C	Suction cup B30-2 Chloroprene, G3/8" male, with mesh filter	0.60	B30-2.10.04AD
C	Suction cup B30-2 Chloroprene, G3/8" male, with dual flow control valve	0.60	B30-2.10.04DD
C	Suction cup B30-2 Chloroprene, 3/8" NPT male, with mesh filter	0.60	B30-2.10.04AE
C	Suction cup B30-2 Chloroprene, 3/8" NPT male, with dual flow control valve	0.60	B30-2.10.04DE
D	Suction cup B30-2 Chloroprene, 5x1/8"NPSF female	0.96	B30-2.10.04AF
D	Suction cup B30-2 Chloroprene, 5x1/8"NPSF female, with dual flow control valve	0.96	B30-2.10.04DF
E	Suction cup B30-2 Chloroprene, 1/8"NPSF female, PA	0.33	B30-2.10.04AH
A	Suction cup B30-2 Silicone, 1/8"NPSF female	0.46	B30-2.20.04AA
A	Suction cup B30-2 Silicone, 1/8"NPSF female, with mesh filter	0.46	B30-2.20.04AG
A	Suction cup B30-2 Silicone, 1/8"NPSF female, with dual flow control valve	0.46	B30-2.20.04DA
B	Suction cup B30-2 Silicone, G1/4" male, with mesh filter	0.50	B30-2.20.04AB
B	Suction cup B30-2 Silicone, G1/4" male, with dual flow control valve	0.50	B30-2.20.04DB
B	Suction cup B30-2 Silicone, 1/4" NPT male, with mesh filter	0.50	B30-2.20.04AC
B	Suction cup B30-2 Silicone, 1/4" NPT male, with dual flow control valve	0.50	B30-2.20.04DC
C	Suction cup B30-2 Silicone, G3/8" male, with mesh filter	0.60	B30-2.20.04AD
C	Suction cup B30-2 Silicone, G3/8" male, with dual flow control valve	0.60	B30.2.20.04DD

	Suction cups with fitting	Weight (oz)	Part No.
C	Suction cup B30-2 Silicone, 3/8" NPT male, with mesh filter	0.60	B30-2.20.04AE
C	Suction cup B30-2 Silicone, 3/8" NPT male, with dual flow control valve	0.60	B30-2.20.04DE
D	Suction cup B30-2 Silicone, 5x1/8"NPSF female	0.96	B30-2.20.04AF
D	Suction cup B30-2 Silicone, 5x1/8"NPSF female, with dual flow control valve	0.96	B30-2.20.04DF
E	Suction cup B30-2 Silicone, 1/8"NPSF female, PA	0.33	B30-2.20.04AH
A	Suction cup B30-2 HNBR, 1/8"NPSF female	0.46	B30-2.37.04AA
A	Suction cup B30-2 HNBR, 1/8"NPSF female, with mesh filter	0.46	B30-2.37.04AG
A	Suction cup B30-2 HNBR, 1/8"NPSF female, with dual flow control valve	0.46	B30-2.37.04DA
B	Suction cup B30-2 HNBR, G1/4" male, with mesh filter	0.46	B30-2.37.04AB
B	Suction cup B30-2 HNBR, G1/4" Male, with dual flow control valve	0.50	B30-2.37.04DB
B	Suction cup B30-2 HNBR, 1/4" NPT male, with mesh filter	0.50	B30-2.37.04AC
B	Suction cup B30-2 HNBR, 1/4" NPT male, with dual flow control valve	0.50	B30-2.37.04DC
C	Suction cup B30-2 HNBR, G3/8" male, with mesh filter	0.50	B30-2.37.04AD
C	Suction cup B30-2 HNBR, G3/8" male, with dual flow control valve	0.50	B30-2.37.04DD
C	Suction cup B30-2 HNBR, 3/8" NPT male, with mesh filter	0.50	B30-2.37.04AE
C	Suction cup B30-2 HNBR, 3/8" NPT male, with dual flow control valve	0.50	B30-2.37.04DE
D	Suction cup B30-2 HNBR, 5x1/8"NPSF female	0.96	B30-2.37.04AF
D	Suction cup B30-2 HNBR, 5x1/8"NPSF female, with dual flow control valve	0.96	B30-2.37.04DF

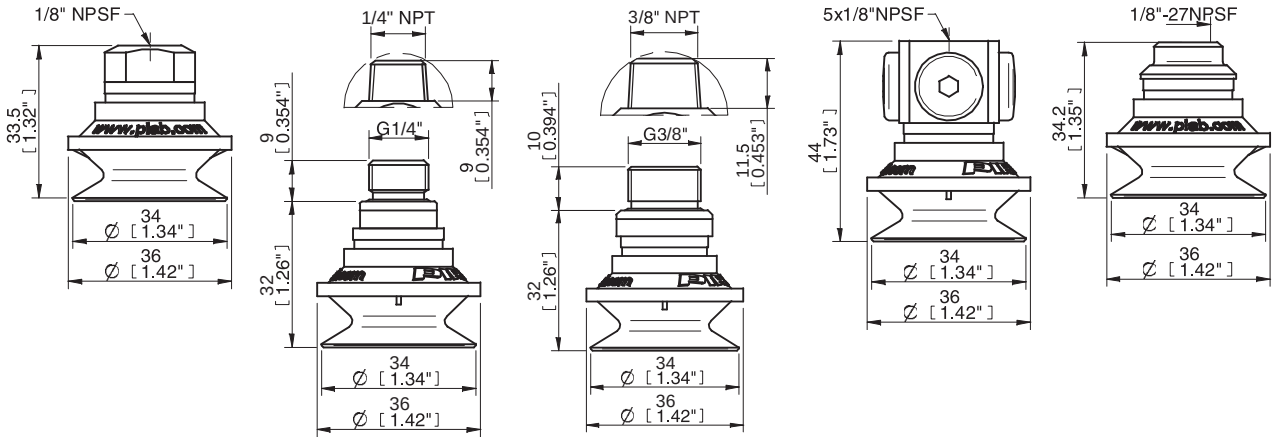

A B C D E

Rubber parts	Part No.
Suction cup B30-2 Chloroprene	B30-2.10
Suction cup B30-2 Silicone	B30-2.20
Suction cup B30-2 HNBR	B30-2.37

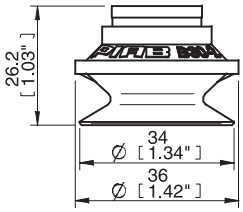

Fittings	Part No.
Fitting 1/8"NPSF female	04AA
Fitting 1/8"NPSF female, with mesh filter	04AG
Fitting 1/8"NPSF female, with dual flow control valve	04DA
Fitting G1/4" male, with mesh filter	04AB
Fitting G1/4" male, with dual flow control valve	04DB
Fitting 1/4" NPT male, with mesh filter	04AC
Fitting 1/4" NPT male, with dual flow control valve	04DC
Fitting G3/8" male, with mesh filter	04AD
Fitting G3/8" male, with dual flow control valve	04DD
Fitting 3/8" NPT male, with mesh filter	04AE
Fitting 3/8" NPT male, with dual flow control valve	04DE
Fitting 5x1/8"NPSF female	04AF
Fitting 5x1/8"NPSF female, with dual flow control valve	04DF
Fitting 1/8"NPSF female, PA	04AH

B40

SUCTION CUP WITH SHORT BELLOWS

- Suitable for level adjustment. Several short bellows in one lifting device can handle objects with height differences and varying shapes, for example embossed or corrugated plates.
- The lifting movement can be used to separate small and thin objects.
- Only lightweight objects should be handled when the lifting force is parallel to the surface of the object, in order to achieve good precision and safe lifting movement.

LIFTING FORCES & TECHNICAL DATA

Outer Dia.	Lifting force vertical to the surface, lbf, at vacuum level			Lifting force parallel to the surface, lbf, at vacuum level			Volume	Min. curve radius	Max. vertical movement	Weight rubber part
in	6 -inHg	18 -inHg	27 -inHg	6 -inHg	18 -inHg	27 -inHg	in³	in	in	oz
1.69	4.95	8.77	11.0	—	—	—	0.90	0.79	0.47	0.35

MATERIAL SPECIFICATIONS

Material	Color	Hardness, °Shore A	Temperature range, °F
Chloroprene, CR	Black	60	-40–230
Silicone, SIL	Red	50	-40–392
HNBR	Grey-blue	75	-22–284*

**For a shorter period of time up to 320 °F.*

MATERIAL RESISTANCE

Material	Wear resistance	Oil	Weather & Ozone	Hydrolysis	Gasoline	Concentrated acids	Alcohol	Oxidation
Chloroprene, CR	Excellent	Fair	Good	Good	Fair	Poor	Good	Good
Silicone, SIL	Good	Poor	Excellent	Fair	Poor	Poor	Good	Excellent
HNBR	Excellent	Excellent	Excellent	Good	Excellent	Fair	Good	Excellent

ORDERING INFORMATION

	Suction cups with fitting	Weight (oz)	Part No.
A	Suction cup B40 Chloroprene, 1/8"NPSF female	0.56	B40.10.04AA
A	Suction cup B40 Chloroprene, 1/8"NPSF female, with mesh filter	0.56	B40.10.04AG
A	Suction cup B40 Chloroprene, 1/8"NPSF female, with dual flow control valve	0.56	B40.10.04DA
B	Suction cup B40 Chloroprene, G1/4" male, with mesh filter	0.60	B40.10.04AB
B	Suction cup B40 Chloroprene, G1/4" male, with mesh filter and dual flow control valve	0.60	B40.10.04DB
B	Suction cup B40 Chloroprene, 1/4" NPT male, with mesh filter	0.60	B40.10.04AC
B	Suction cup B40 Chloroprene, 1/4" NPT male, with dual flow control valve	0.60	B40.10.04DC
C	Suction cup B40 Chloroprene, G3/8" male, with mesh filter	0.70	B40.10.04AD
C	Suction cup B40 Chloroprene, G3/8" male, with mesh filter and dual flow control valve	0.70	B40.10.04DD
C	Suction cup B40 Chloroprene, 3/8" NPT male, with mesh filter	0.70	B40.10.04AE
C	Suction cup B40 Chloroprene, 3/8" NPT male, with dual flow control valve	0.70	B40.10.04DE
D	Suction cup B40 Chloroprene, 5x1/8"NPSF female	1.06	B40.10.04AF
D	Suction cup B40 Chloroprene, 5x1/8"NPSF female, with dual flow control valve	1.06	B40.10.04DF
E	Suction cup B40 Chloroprene, 1/8"NPSF female, PA	0.43	B40.10.04AH
A	Suction cup B40 Silicone, 1/8"NPSF female	0.56	B40.20.04AA
A	Suction cup B40 Silicone, 1/8"NPSF female, with mesh filter	0.56	B40.20.04AG
A	Suction cup B40 Silicone, 1/8"NPSF female, with dual flow control valve	0.56	B40.20.04DA
B	Suction cup B40 Silicone, G1/4" male, with mesh filter	0.60	B40.20.04AB
B	Suction cup B40 Silicone, G1/4" male, with mesh filter and dual flow control valve	0.60	B40.20.04DB
B	Suction cup B40 Silicone, 1/4" NPT male, with mesh filter	0.60	B40.20.04AC
B	Suction cup B40 Silicone, 1/4" NPT male, with dual flow control valve	0.60	B40.20.04DC
C	Suction cup B40 Silicone, G3/8" male, with mesh filter	0.70	B40.20.04AD
C	Suction cup B40 Silicone, G3/8" male, with mesh filter and dual flow control valve	0.70	B40.20.04DD
C	Suction cup B40 Silicone, 3/8" NPT male, with mesh filter	0.70	B40.20.04AE

	Suction cups with fitting	Weight (oz)	Part No.
C	Suction cup B40 Silicone, 3/8" NPT male, with dual flow control valve	0.70	B40.20.04DE
D	Suction cup B40 Silicone, 5x1/8"NPSF female	1.06	B40.20.04AF
D	Suction cup B40 Silicone, 5x1/8"NPSF female, with dual flow control valve	1.06	B40.20.04DF
E	Suction cup B40 Silicone, 1/8"NPSF female PA	0.43	B40.20.04AH
A	Suction cup B40 HNBR, 1/8"NPSF female	0.56	B40.37.04AA
A	Suction cup B40 HNBR, 1/8"NPSF female, with mesh filter	0.56	B40.37.04AG
A	Suction cup B40 HNBR, 1/8"NPSF female, with dual flow control valve	0.56	B40.37.04DA
B	Suction cup B40 HNBR, G1/4" male, with mesh filter	0.60	B40.37.04AB
B	Suction cup B40 HNBR, G1/4" male, with dual flow control valve	0.60	B40.37.04DB
B	Suction cup B40 HNBR, 1/4" NPT male, with mesh filter	0.60	B40.37.04AC
B	Suction cup B40 HNBR, 1/4" NPT male, with dual flow control valve	0.60	B40.37.04DC
C	Suction cup B40 HNBR, G3/8" male, with mesh filter	0.70	B40.37.04AD
C	Suction cup B40 HNBR, G3/8" male, with dual flow control valve	0.70	B40.37.04DD
C	Suction cup B40 HNBR, 3/8" NPT male, with mesh filter	0.70	B40.37.04AE
C	Suction cup B40 HNBR, 3/8" NPT male, with dual flow control valve	0.70	B40.37.04DE
D	Suction cup B40 HNBR, 5x1/8"NPSF female	1.06	B40.37.04AF
D	Suction cup B40 HNBR, 5x1/8"NPSF female with dual flow control valve	1.06	B40.37.04DF

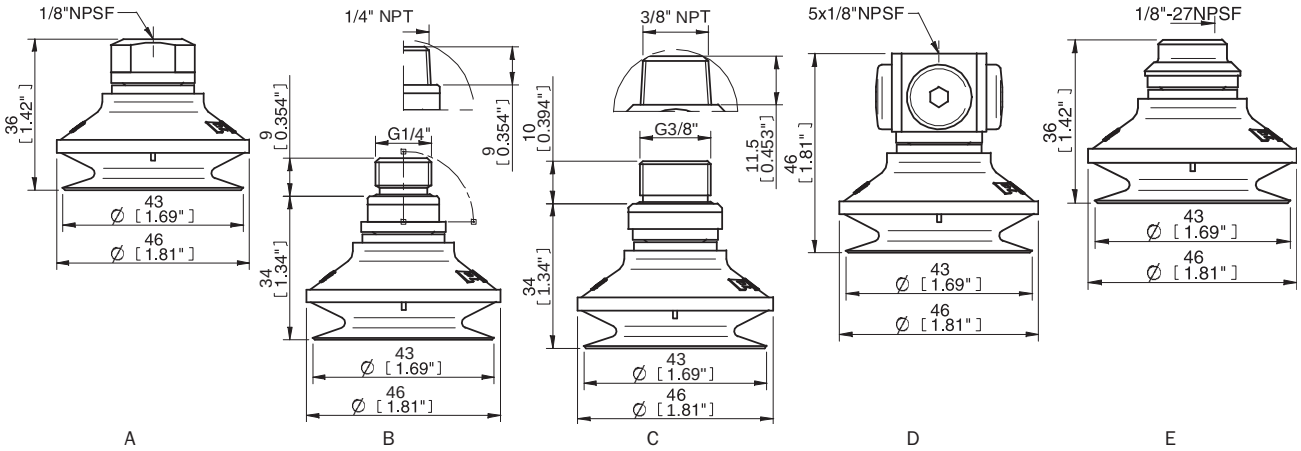

Rubber parts	Part No.
Suction cup B40 Chloroprene	B40.10
Suction cup B40 Silicone	B40.20
Suction cup B40 HNBR	B40.37

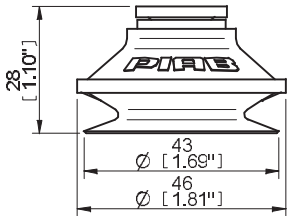

Fittings	Part No.
Fitting 1/8"NPSF female	04AA
Fitting 1/8"NPSF female, with mesh filter	04AG
Fitting 1/8"NPSF female, with dual flow control valve	04DA
Fitting G1/4" male, with mesh filter	04AB
Fitting G1/4" male, with dual flow control valve	04DB
Fitting 1/4" NPT male, with mesh filter	04AC
Fitting 1/4" NPT male, with dual flow control valve	04DC
Fitting G3/8" male, with mesh filter	04AD
Fitting G3/8" male, with dual flow control valve	04DD
Fitting 3/8" NPT male, with mesh filter	04AE
Fitting 3/8" NPT male, with dual flow control valve	04DE
Fitting 5x1/8"NPSF female	04AF
Fitting 5x1/8"NPSF female, with dual flow control valve	04DF
Fitting 1/8"NPSF female, PA	04AH

B50

SUCTION CUP WITH SHORT BELLOWS

- Suitable for level adjustment. Several short bellows in one lifting device can handle objects with height differences and varying shapes, for example embossed or corrugated plates.
- The lifting movement can be used to separate small and thin objects.
- Only lightweight objects should be handled when the lifting force is parallel to the surface of the object, in order to achieve good precision and safe lifting movement.

LIFTING FORCES & TECHNICAL DATA

Outer Dia.	Lifting force vertical to the surface, lbf, at vacuum level			Lifting force parallel to the surface, lbf, at vacuum level			Volume	Min. curve radius	Max. vertical movement	Weight rubber part
in	6 -inHg	18 -inHg	27 -inHg	6 -inHg	18 -inHg	27 -inHg	in³	in	in	oz
2.09	7.42	14.6	18.4	—	—	—	1.95	1.18	0.75	0.71

MATERIAL SPECIFICATIONS

Material	Color	Hardness, °Shore A	Temperature range, °F
Nitrile-PVC, NPV	Black	50	32–194
Silicone, SIL	Red	50	-40–392
HNBR	Grey-blue	75	-22–284*

** For a shorter period of time up to 320 °F*

MATERIAL RESISTANCE

Material	Wear resistance	Oil	Weather & ozone	Hydrolysis	Gasoline	Concentrated acids	Alcohol	Oxidation
Nitrile-PVC, NPV	Excellent	Excellent	Good	Good	Excellent	Fair	Good	Good
Silicone, SIL	Good	Poor	Excellent	Fair	Poor	Poor	Good	Excellent
HNBR	Excellent	Excellent	Excellent	Good	Excellent	Fair	Good	Excellent

ORDERING INFORMATION

	Suction cups with fitting	Weight (oz)	Part No.
A	Suction cup B50 Nitrile-PVC, 1/8"NPSF female	1.06	B50.30.05AA
A	Suction cup B50 Nitrile-PVC, 1/8"NPSF female, with mesh filter	1.06	B50.30.05AG
A	Suction cup B50 Nitrile-PVC, 1/8"NPSF female, with dual flow control valve	1.06	B50.30.05DA
B	Suction cup B50 Nitrile-PVC, G1/4" male, with mesh filter	1.06	B50.30.05AB
B	Suction cup B50 Nitrile-PVC, G1/4" male, with mesh filter and dual flow control valve	1.06	B50.30.05DB
B	Suction cup B50 Nitrile-PVC, 1/4" NPT male, with mesh filter	1.06	B50.30.05AC
B	Suction cup B50 Nitrile-PVC, 1/4" NPT male, with dual flow control valve	1.06	B50.30.05DC
C	Suction cup B50 Nitrile-PVC, G3/8" male, with mesh filter	1.06	B50.30.05AD
C	Suction cup B50 Nitrile-PVC, G3/8" male, with mesh filter and dual flow control valve	1.06	B50.30.05DD
C	Suction cup B50 Nitrile-PVC, 3/8" NPT male, with mesh filter	1.06	B50.30.05AE
C	Suction cup B50 Nitrile-PVC, 3/8" NPT male, with dual flow control valve	1.06	B50.30.05DE
D	Suction cup B50 Nitrile-PVC, 5x1/8"NPSF female	1.77	B50.30.05AF
D	Suction cup B50 Nitrile-PVC, 5x1/8"NPSF female, with dual flow control valve	1.77	B50.30.05DF
E	Suction cup B50 Nitrile-PVC, 1/8"NPSF female, PA	0.91	B50.30.05CA
A	Suction cup B50 Silicone, 1/8"NPSF female	1.06	B50.20.05AA
A	Suction cup B50 Silicone, 1/8"NPSF female, with mesh filter	1.06	B50.20.05AG
A	Suction cup B50 Silicone, 1/8"NPSF female, with dual flow control valve	1.06	B50.20.05DA
B	Suction cup B50 Silicone, G1/4" male, with mesh filter	1.06	B50.20.05AB
B	Suction cup B50 Silicone, G1/4" male, with mesh filter and dual flow control valve	1.06	B50.20.05DB
B	Suction cup B50 Silicone, 1/4" NPT male, with mesh filter	1.06	B50.20.05AC
B	Suction cup B50 Silicone, 1/4" NPT male, with dual flow control valve	1.06	B50.20.05DC
C	Suction cup B50 Silicone, G3/8" male, with mesh filter	1.06	B50.20.05AD
C	Suction cup B50 Silicone, G3/8" male, with mesh filter and dual flow control valve	1.06	B50.20.05DD
C	Suction cup B50 Silicone, 3/8" NPT male, with mesh filter	1.06	B50.20.05AE

	Suction cups with fitting	Weight (oz)	Part No.
C	Suction cup B50 Silicone, 3/8" NPT male, with dual flow control valve	1.06	B50.20.05DE
D	Suction cup B50 Silicone, 5x1/8"NPSF female	1.77	B50.20.05AF
D	Suction cup B50 Silicone, 5x1/8"NPSF female, with dual flow control valve	1.77	B50.20.05DF
E	Suction cup B50 Silicone, 1/8” NPSF female, PA	0.91	B50.20.05CA
A	Suction cup B50 HNBR, 1/8"NPSF female	1.06	B50.37.05AA
A	Suction cup B50 HNBR, 1/8"NPSF female, with mesh filter	1.06	B50.37.05AG
A	Suction cup B50 HNBR, 1/8"NPSF female, with dual flow control valve	1.06	B50.37.05DA
B	Suction cup B50 HNBR, G1/4" male, with mesh filter	1.06	B50.37.05AB
B	Suction cup B50 HNBR, G1/4" male, with dual flow control valve	1.06	B50.37.05DB
B	Suction cup B50 HNBR, 1/4" NPT male, with mesh filter	1.06	B50.37.05AC
B	Suction cup B50 HNBR, 1/4" NPT male, with dual flow control valve	1.06	B50.37.05DC
C	Suction cup B50 HNBR, G3/8" male, with mesh filter	1.06	B50.37.05AD
C	Suction cup B50 HNBR, G3/8" male, with dual flow control valve	1.06	B50.37.05DD
C	Suction cup B50 HNBR, 3/8" NPT male, with mesh filter	1.06	B50.37.05AE
C	Suction cup B50 HNBR, 3/8" NPT male, with dual flow control valve	1.06	B50.37.05DE
D	Suction cup B50 HNBR, 5x1/8"NPSF female	1.77	B50.37.05AF
D	Suction cup B50 HNBR, 5x1/8"NPSF female, with dual flow control valve	1.77	B50.37.05DF

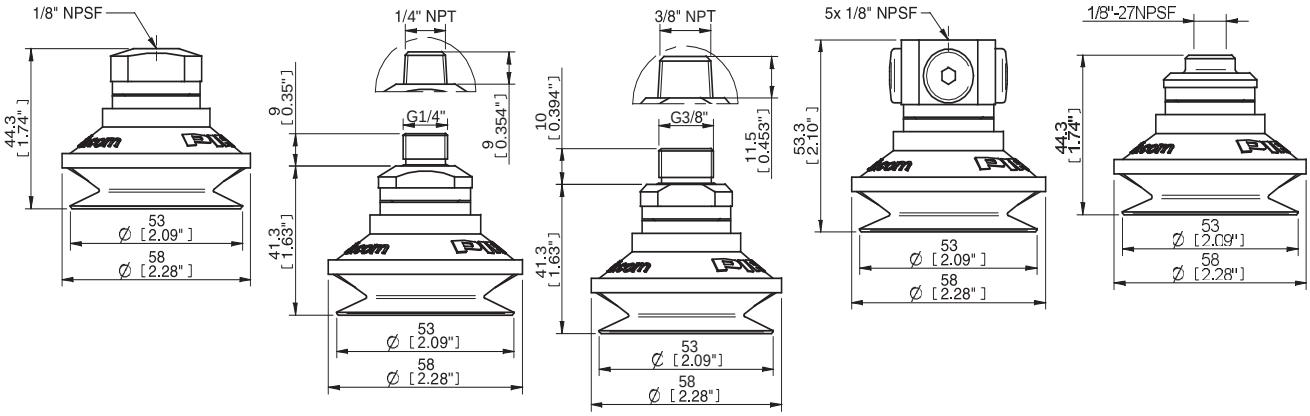

A B C D E

Rubber parts	Part No.
Suction cup B50 Silicone	B50.20
Suction cup B50 Nitrile-PVC	B50.30
Suction cup B50 HNBR	B50.37

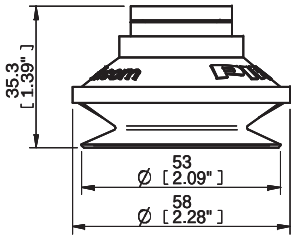

Fittings	Part No.
Fitting 1/8"NPSF female	05AA
Fitting 1/8"NPSF female, with mesh filter	05AG
Fitting 1/8"NPSF female, with dual flow control valve	05DA
Fitting G1/4" male, with mesh filter	05AB
Fitting G1/4" male, with dual flow control valve	05DB
Fitting 1/4" NPT male, with mesh filter	05AC
Fitting 1/4" NPT male, with dual flow control valve	05DC
Fitting G3/8" male, with mesh filter	05AD
Fitting G3/8" male, with mesh filter and dual flow control valve	05DD
Fitting 3/8" NPT male, with mesh filter	05AE
Fitting 3/8" NPT male, with dual flow control valve	05DE
Fitting 5x1/8"NPSF female	05AF
Fitting 5x1/8"NPSF female, with dual flow control valve	05DF
Fitting 1/8"NPSF female, PA	05CA

B50-2

SUCTION CUP WITH SHORT BELLOWS AND FILTER DISK

- Suitable for level adjustment. Several short bellows in one lifting device can handle objects with height differences and varying shapes, for example embossed or corrugated plates.
- Lifting movement to separate small and thin objects.
- Only lightweight objects should be handled when the lifting force is parallel to the surface of the object, in order to achieve good precision and safe lifting movement.
- Filter disk made of PE.

LIFTING FORCES & TECHNICAL DATA

Outer Dia.	Lifting force vertical to the surface, lbf, at vacuum level			Lifting force parallel to the surface, lbf, at vacuum level			Volume	Min. curve radius	Max. vertical movement	Weight rubber part
in	6 -inHg	18 -inHg	27 -inHg	6 -inHg	18 -inHg	27 -inHg	in³	in	in	oz
2.09	7.42	14.6	18.4	—	—	—	1.95	1.18	0.75	0.71

MATERIAL SPECIFICATIONS

Material	Color	Hardness °Shore A	Temperature range °F
Nitrile-PVC, NPV	Black	50	32–194*
Silicone, SIL	Red	50	-40–392*

**Filter disk max. 176 °F*

MATERIAL RESISTANCE

Material	Wear resistance	Oil	Weather & Ozone	Hydrolysis	Gasoline	Concentrated acids	Alcohol	Oxidation
Nitrile-PVC, NPV	Excellent	Excellent	Good	Good	Excellent	Fair	Good	Good
Silicone, SIL	Good	Poor	Excellent	Fair	Poor	Poor	Good	Excellent

ORDERING INFORMATION

	Suction cups with fitting	Weight (oz)	Part No.
A	Suction cup B50-2 Nitrile-PVC, 1/8"NPSF female	1.06	B50-2.30.05AA
A	Suction cup B50-2 Nitrile-PVC with filter, 1/8"NPSF female, with mesh filter	1.06	B50-2.30.05AG
A	Suction cup B50-2 Nitrile-PVC with filter, 1/8"NPSF female, with dual flow control valve	1.06	B50-2.30.05DA
B	Suction cup B50-2 Nitrile-PVC with filter, G1/4" male, with mesh filter	1.06	B50-2.30.05AB
B	Suction cup B50-2 Nitrile-PVC with filter, G1/4" male, with dual flow control valve and mesh filter	1.06	B50-2.30.05DB
B	Suction cup B50-2 Nitrile-PVC, 1/4" NPT male, with mesh filter	1.06	B50-2.30.05AC
B	Suction cup B50-2 Nitrile-PVC, 1/4" NPT male, with dual flow control valve	1.06	B50-2.30.05DC
C	Suction cup B50-2 Nitrile-PVC with filter, G3/8" male, with mesh filter	1.06	B50-2.30.05AD
C	Suction cup B50-2 Nitrile-PVC with filter, G3/8" male, with dual flow control valve and mesh filter	1.06	B50-2.30.05DD
C	Suction cup B50-2 Nitrile-PVC, 3/8" NPT male, with mesh filter	1.06	B50-2.30.05AE
C	Suction cup B50-2 Nitrile-PVC, 3/8" NPT male, with dual flow control valve	1.06	B50-2.30.05DE
D	Suction cup B50-2 Nitrile-PVC with filter, 5x1/8"NPSF female	1.77	B50-2.30.05AF
D	Suction cup B50-2 Nitrile-PVC with filter, 5x1/8"NPSF female, with dual flow control valve	1.77	B50-2.30.05DF
E	Suction cup B50-2 Nitrile-PVC with filter, 1/8"NPSF female, PA	0.91	B50-2.30.05CA
A	Suction cup B50-2 Silicone, 1/8"NPSF female	1.06	B50-2.20.05AA
A	Suction cup B50-2 Silicone with filter, 1/8"NPSF female, with mesh filter	1.06	B50-2.20.05AG
A	Suction cup B50-2 Silicone with filter, 1/8"NPSF female, with dual flow control valve	1.06	B50-2.20.05DA
B	Suction cup B50-2 Silicone with filter, G1/4" male, with mesh filter	1.06	B50-2.20.05AB
B	Suction cup B50-2 Silicone with filter, G1/4" male, with dual flow control valve and mesh filter	1.06	B50-2.20.05DB
B	Suction cup B50-2 Silicone, 1/4" NPT male, with mesh filter	1.06	B50-2.20.05AC
B	Suction cup B50-2 Silicone, 1/4" NPT male, with dual flow control valve	1.06	B50-2.20.05DC
C	Suction cup B50-2 Silicone with filter, G3/8" male, with mesh filter	1.06	B50-2.20.05AD
C	Suction cup B50-2 Silicone with filter, G3/8" male, with dual flow control valve and mesh filter	1.06	B50-2.20.05DD
C	Suction cup B50-2 Silicone, 3/8" NPT male, with mesh filter	1.06	B50-2.20.05AE
C	Suction cup B50-2 Silicone, 3/8" NPT male, with dual flow control valve	1.06	B50-2.20.05DE
D	Suction cup B50-2 Silicone with filter, 5x1/8"NPSF female	1.77	B50-2.20.05AF
D	Suction cup B50-2 Silicone with filter, 5x1/8"NPSF female, with dual flow control valve	1.77	B50-2.20.05DF
E	Suction cup B50-2 Silicone with filter, 1/8"NPSF female, PA	0.91	B50-2.20.05CA

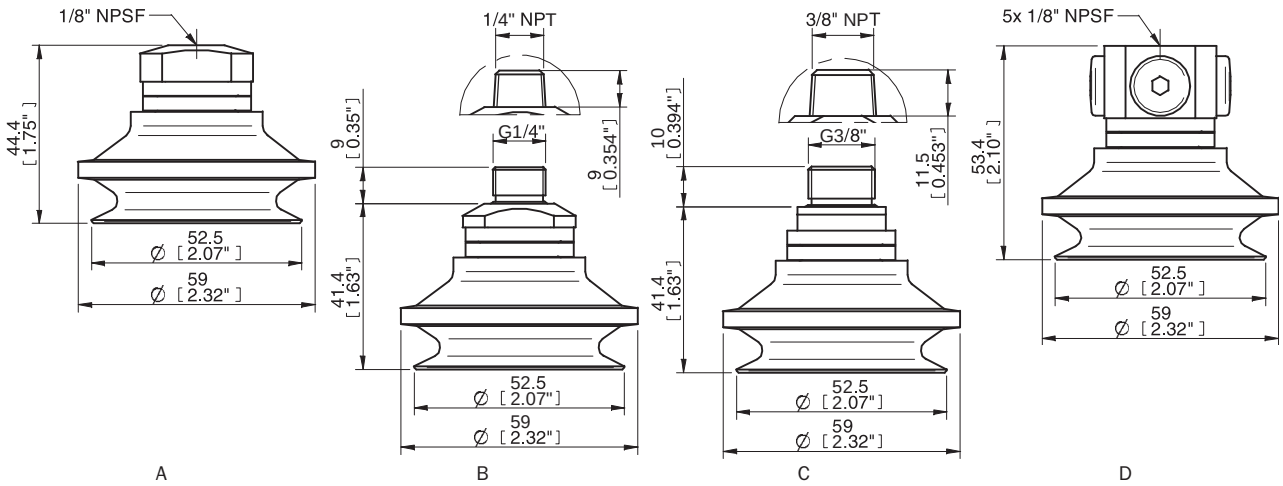

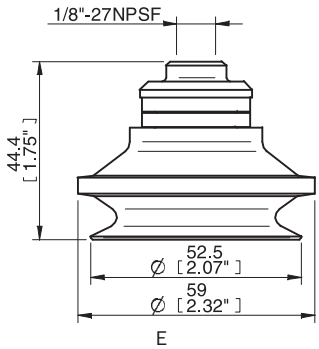

Rubber parts	Part No.
Suction cup B50-2 Nitrile-PVC, with filter disk	B50-2.30
Suction cup B50-2 Silicone, with filter disk	B50-2.20

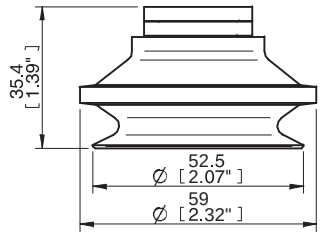

Fittings	Part No.
Fitting 1/8"NPSF female	05AA
Fitting 1/8"NPSF female, with mesh filter	05AG
Fitting 1/8"NPSF female, with dual flow control valve	05DA
Fitting G1/4" male, with mesh filter	05AB
Fitting G1/4" male, with dual flow control valve	05DB
Fitting 1/4" NPT male, with mesh filter	05AC
Fitting 1/4" NPT male, with dual flow control valve	05DC
Fitting G3/8" male, with mesh filter	05AD
Fitting G3/8" male, with mesh filter and dual flow control valve	05DD
Fitting 3/8" NPT male, with mesh filter	05AE
Fitting 3/8" NPT male, with dual flow control valve	05DE
Fitting 5x1/8"NPSF female	05AF
Fitting 5x1/8"NPSF female, with dual flow control valve	05DF
Fitting 1/8"NPSF female, PA	05CA

Spare part	Material	Temperature range, °F	Part No.
Filter for B50-2	PE	-40–176	31.50.243

B75

SUCTION CUP WITH SHORT BELLOWS

- Suitable for level adjustment. Several short bellows in one lifting device can handle objects with height differences and varying shapes, for example embossed or corrugated plates.
- The lifting movement can be used to separate small and thin objects.
- Only lightweight objects should be handled when the lifting force is parallel to the surface of the object, in order to achieve good precision and safe lifting movement.

LIFTING FORCES & TECHNICAL DATA

Outer Dia.	Lifting force vertical to the surface, lbf, at vacuum level			Lifting force parallel to the surface, lbf, at vacuum level			Volume	Min. curve radius	Max. vertical movement	Weight rubber part
in	6 -inHg	18 -inHg	27 -inHg	6 -inHg	18 -inHg	27 -inHg	in³	in	in	oz
3.07	16.6	37.5	50.8	—	—	—	6.70	1.60	0.94	1.23

MATERIAL SPECIFICATIONS

Material	Color	Hardness °Shore A	Temperature range °F
Nitrile-PVC, NPV	Black	50	32–194
Silicone, SIL	Red	50	-40–392
HNBR	Grey-blue	75	-22–284*

** For a shorter period of time up to 320 °F*

MATERIAL RESISTANCE

Material	Wear resistance	Oil	Weather & ozone	Hydrolysis	Gasoline	Concentrated acids	Alcohol	Oxidation
Nitrile-PVC, NPV	Excellent	Excellent	Good	Good	Excellent	Fair	Good	Good
Silicone, SIL	Good	Poor	Excellent	Fair	Poor	Poor	Good	Excellent
HNBR	Excellent	Excellent	Excellent	Good	Excellent	Fair	Good	Excellent

ORDERING INFORMATION

	Suction cups with fitting	Weight (oz)	Part No.
A	Suction cup B75 Nitrile-PVC, 1/8"NPSF female Al, with mesh filter	3.22	B75.30.07UA
A	Suction cup B75 Nitrile-PVC, 3/8"NPSF female Al, with mesh filter	3.79	B75.30.07UB
A	Suction cup B75 Nitrile-PVC, G3/8" female PPS, with mesh filter	2.64	B75.30.07UC
A	Suction cup B75 Nitrile-PVC, G1/2" female Al, with mesh filter	3.66	B75.30.07UD
A	Suction cup B75 Nitrile-PVC, G1/2" female PPS, with mesh filter	2.43	B75.30.07UE
A	Suction cup B75 Nitrile-PVC, 1/8"NPSF female PPS, with mesh filter	2.44	B75.30.07UG
A	Suction cup B75 Nitrile-PVC, 1/4" NPT female Al, with mesh filter & 10-32 addl. conn.	3.94	B75.30.07UH
A	Suction cup B75 Nitrile-PVC, 1/8"NPSF female Al, with mesh filter & 10-32 addl. conn.	3.28	B75.30.07UI
A	Suction cup B75 Nitrile-PVC, 3/8"NPSF female PPS, with mesh filter	2.64	B75.30.07UU
B	Suction cup B75 Nitrile-PVC, 1/8"NPSF female, clamp ring with mesh filter	3.63	B75.30.07NA
B	Suction cup B75 Nitrile-PVC, G3/8" female, clamp ring with mesh filter	3.63	B75.30.07ND
B	Suction cup B75 Nitrile-PVC, 3/8"NPSF female, clamp ring with mesh filter	3.63	B75.30.07NE
B	Suction cup B75 Nitrile-PVC, G1/2" female, clamp ring with mesh filter	3.63	B75.30.07NF
A	Suction cup B75 Silicone, 1/8"NPSF female Al, with mesh filter	3.22	B75.20.07UA
A	Suction cup B75 Silicone, 3/8"NPSF female Al, with mesh filter	3.79	B75.20.07UB
A	Suction cup B75 Silicone, G3/8" female PPS, with mesh filter	2.64	B75.20.07UC
A	Suction cup B75 Silicone, G1/2" female Al, with mesh filter	3.67	B75.20.07UD
A	Suction cup B75 Silicone, G1/2" female PPS, with mesh filter	2.43	B75.20.07UE
A	Suction cup B75 Silicone, 1/8"NPSF female PPS, with mesh filter	2.44	B75.20.07UG
A	Suction cup B75 Silicone, 1/4" NPT female Al, with mesh filter & 10-32 addl. conn.	3.94	B75.20.07UH

	Suction cups with fitting	Weight (oz)	Part No.
A	Suction cup B75 Silicone, 1/8"NPSF female Al, with mesh filter & 10-32 addl. conn.	3.28	B75.20.07UI
A	Suction cup B75 Silicone, 3/8"NPSF female PPS, with mesh filter	2.64	B75.20.07UU
B	Suction cup B75 Silicone, 1/8"NPSF female, clamp ring with mesh filter	3.63	B75.20.07NA
B	Suction cup B75 Silicone, G3/8" female, clamp ring with mesh filter	3.63	B75.20.07ND
B	Suction cup B75 Silicone, 3/8"NPSF female, clamp ring with mesh filter	3.63	B75.20.07NE
B	Suction cup B75 Silicone, G1/2" female, clamp ring with mesh filter	3.63	B75.20.07NF
A	Suction cup B75 HNBR, 1/8"NPSF female Al, with mesh filter	3.22	B75.37.07UA
A	Suction cup B75 HNBR, 3/8"NPSF female Al, with mesh filter	3.79	B75.37.07UB
A	Suction cup B75 HNBR, G3/8" female PPS, with mesh filter	2.64	B75.37.07UC
A	Suction cup B75 HNBR, G1/2" female Al, with mesh filter	3.67	B75.37.07UD
A	Suction cup B75 HNBR, G1/2" female PPS, with mesh filter	2.44	B75.37.07UE
A	Suction cup B75 HNBR, 1/8"NPSF female PPS, with mesh filter	2.47	B75.37.07UG
A	Suction cup B75 HNBR, 1/4" NPT female Al, with mesh filter & 10-32 addl. conn.	3.94	B75.37.07UH
A	Suction cup B75 HNBR, 1/8"NPSF female Al, with mesh filter & 10-32 addl. conn.	3.28	B75.37.07UI
A	Suction cup B75 HNBR, 3/8"NPSF female PPS, with mesh filter	2.64	B75.37.07UU
B	Suction cup B75 HNBR, 1/8"NPSF female, clamp ring with mesh filter	3.63	B75.37.07NA
B	Suction cup B75 HNBR, G3/8" female, clamp ring with mesh filter	3.63	B75.37.07ND
B	Suction cup B75 HNBR, 3/8"NPSF female, clamp ring with mesh filter	3.63	B75.37.07NE
B	Suction cup B75 HNBR, G1/2" female, clamp ring with mesh filter	3.63	B75.37.07NF

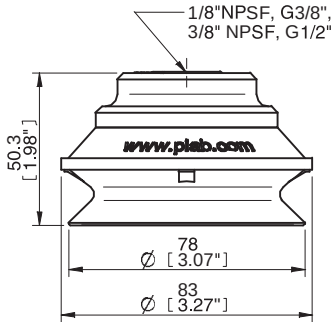

A

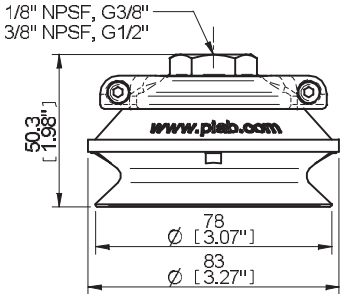

B

Rubber parts	Part No.
Suction cup B75 Nitrile-PVC	B75.30
Suction cup B75 Nitrile-PVC with washer	B75.30.W
Suction cup B75 Silicone	B75.20
Suction cup B75 Silicone with washer	B75.20.W
Suction cup B75 HNBR	B75.37
Suction cup B75 HNBR with washer	B75.37.W

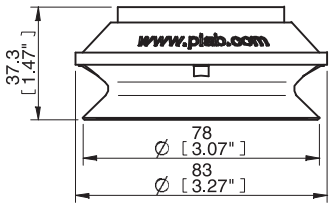

Fittings	Part No.
Fitting 1/8" NPSF female Al, with mesh filter	07UA
Fitting 3/8" NPSF female Al, with mesh filter	07UB
Fitting G3/8" female PPS, with mesh filter	07UC
Fitting G1/2" female Al, with mesh filter	07UD
Fitting G1/2" female PPS, with mesh filter	07UE
Fitting 1/8" NPSF female PPS, with mesh filter	07UG
Fitting 1/4" NPT female Al, with mesh filter & 10-32 addl. conn.	07UH
Fitting 1/8" NPSF female Al, with mesh filter & 10-32 addl. conn.	07UI
Fitting 3/8" NPSF female PPS, with mesh filter	07UU
Fitting 1/8" NPSF female, clamp ring with mesh filter	07NA
Fitting G3/8" female, clamp ring with mesh filter	07ND
Fitting 3/8" NPSF female, clamp ring with mesh filter	07NE
Fitting G1/2" female, clamp ring with mesh filter	07NF

B75-2

SUCTION CUP WITH SHORT BELLOWS AND FILTER DISK

- Suitable for level adjustment. Several short bellows in one lifting device can handle objects with height differences and varying shapes, for example embossed or corrugated plates.
- Lifting movement to separate small and thin objects.
- Only lightweight objects should be handled when the lifting force is parallel to the surface of the object, in order to achieve good precision and safe lifting movement.
- Filter disk made of PE.

LIFTING FORCES & TECHNICAL DATA

Outer Dia.	Lifting force vertical to the surface, lbf, at vacuum level			Lifting force parallel to the surface, lbf, at vacuum level			Volume	Min. curve radius	Max. vertical movement	Weight rubber part
in	6 -inHg	18 -inHg	27 -inHg	6 -inHg	18 -inHg	27 -inHg	in³	in	in	oz
3.07	16.6	37.5	50.8	—	—	—	6.70	1.60	0.94	1.23

MATERIAL SPECIFICATIONS

Material	Color	Hardness °Shore A	Temperature range °F
Nitrile-PVC, NPV	Black	50	32–194*
Silicone, SIL	Red	50	-40–392*

**Filter disk max. 176 °F*

MATERIAL RESISTANCE

Material	Wear resistance	Oil	Weather & Ozone	Hydrolysis	Gasoline	Concentrated acids	Alcohol	Oxidation
Nitrile-PVC, NPV	Excellent	Excellent	Good	Good	Excellent	Fair	Good	Good
Silicone, SIL	Good	Poor	Excellent	Fair	Poor	Poor	Good	Excellent

ORDERING INFORMATION

	Suction cups with fitting	Weight (oz)	Part No.
A	Suction cup B75-2 Nitrile-PVC, 1/8"NPSF female Al, with mesh filter	3.22	B75-2.30.07UA
A	Suction cup B75-2 Nitrile-PVC, 3/8"NPSF female Al, with mesh filter	3.79	B75-2.30.07UB
A	Suction cup B75-2 Nitrile-PVC, G3/8" female PPS, with mesh filter	2.64	B75-2.30.07UC
A	Suction cup B75-2 Nitrile-PVC, G1/2" female Al, with mesh filter	3.66	B75-2.30.07UD
A	Suction cup B75-2 Nitrile-PVC, G1/2" female PPS, with mesh filter	2.43	B75-2.30.07UE
A	Suction cup B75-2 Nitrile-PVC, 1/8"NPSF female PPS, with mesh filter	2.44	B75-2.30.07UG
A	Suction cup B75-2 Nitrile-PVC, 1/4" NPT female Al, with mesh filter & 10-32 addl. conn.	3.94	B75-2.30.07UH
A	Suction cup B75-2 Nitrile-PVC, 1/8"NPSF female Al, with mesh filter & 10-32 addl. conn.	3.28	B75-2.30.07UI
A	Suction cup B75-2 Nitrile-PVC, 3/8"NPSF female PPS, with mesh filter	2.64	B75-2.30.07UU
B	Suction cup B75-2 Nitrile-PVC with filter, 1/8"NPSF female, with mesh filter	3.63	B75-2.30.07NA
B	Suction cup B75-2 Nitrile-PVC with filter, G3/8" female, with mesh filter	3.63	B75-2.30.07ND
B	Suction cup B75-2 Nitrile-PVC with filter, 3/8"NPSF female, with mesh filter	3.63	B75-2.30.07NE
B	Suction cup B75-2 Nitrile-PVC with filter, G1/2" female, with mesh filter	3.63	B75-2.30.07NF
A	Suction cup B75-2 Silicone, 1/8"NPSF female Al, with mesh filter	3.22	B75-2.20.07UA
A	Suction cup B75-2 Silicone, 3/8"NPSF female Al, with mesh filter	3.79	B75-2.20.07UB
A	Suction cup B75-2 Silicone, G3/8" female PPS, with mesh filter	2.64	B75-2.20.07UC
A	Suction cup B75-2 Silicone, G1/2" female Al, with mesh filter	3.67	B75-2.20.07UD
A	Suction cup B75-2 Silicone, G1/2" female PPS, with mesh filter	2.43	B75-2.20.07UE
A	Suction cup B75-2 Silicone, 1/8"NPSF female PPS, with mesh filter	2.44	B75-2.20.07UG
A	Suction cup B75-2 Silicone, 1/4" NPT female Al, with mesh filter & 10-32 addl. conn.	3.94	B75-2.20.07UH

	Suction cups with fitting	Weight (oz)	Part No.
A	Suction cup B75-2 Silicone, 1/8"NPSF female Al, with mesh filter & 10-32 addl. conn.	3.28	B75-2.20.07UI
A	Suction cup B75-2 Silicone, 3/8"NPSF female PPS, with mesh filter	2.64	B75-2.20.07UU
B	Suction cup B75-2 Silicone with filter, 1/8"NPSF female, with mesh filter	3.63	B75-2.20.07NA
B	Suction cup B75-2 Silicone with filter, G3/8" female, with mesh filter	3.63	B75-2.20.07ND
B	Suction cup B75-2 Silicone with filter, 3/8"NPSF female, with mesh filter	3.63	B75-2.20.07NE
B	Suction cup B75-2 Silicone, G1/2" female, with mesh filter	3.63	B75-2.20.07NF

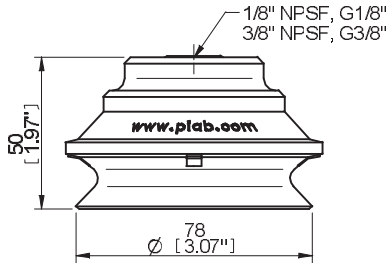

A

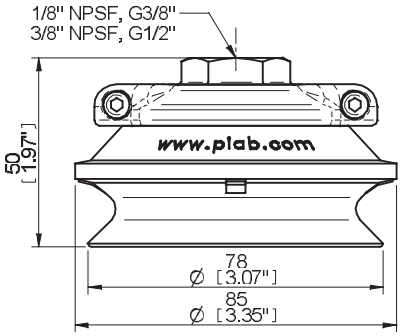

B

Rubber parts	Part No.
Suction cup B75-2 Nitrile-PVC, with filter	B75-2.30
Suction cup B75-2 Nitrile-PVC, with filter & washer	B75-2.30.W
Suction cup B75-2 Silicone, with filter	B75-2.20
Suction cup B75-2 Silicone, with filter & washer	B75-2.20.W

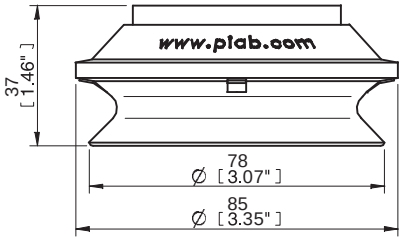

Fittings	Part No.
Fitting 1/8" NPSF female Al, with mesh filter	07UA
Fitting 3/8" NPSF female Al, with mesh filter	07UB
Fitting G3/8" female PPS, with mesh filter	07UC
Fitting G1/2" female Al, with mesh filter	07UD
Fitting G1/2" female PPS, with mesh filter	07UE
Fitting 1/8" NPSF female PPS, with mesh filter	07UG
Fitting 1/4" NPT female Al, with mesh filter & 10-32 addl. conn.	07UH
Fitting 1/8" NPSF female Al, with mesh filter & 10-32 addl. conn.	07UI
Fitting 3/8" NPSF female PPS, with mesh filter	07UU
Fitting 1/8" NPSF female, clamp ring with mesh filter	07NA
Fitting G3/8" female, clamp ring with mesh filter	07ND
Fitting 3/8" NPSF female, clamp ring with mesh filter	07NE
Fitting G1/2" female, clamp ring with mesh filter	07NF

Spare part	Material	Temperature range °F	Part No.
Filter for B75-2	PE	-40–176	31.50.244

B110

SUCTION CUP WITH SHORT BELLOWS

- Suitable for level adjustment. Several short bellows in one lifting device can handle objects with height differences and varying shapes, for example embossed or corrugated plates.
- The lifting movement can be used to separate small and thin objects.
- Only lightweight objects should be handled when the lifting force is parallel to the surface of the object, in order to achieve good precision and safe lifting movement.

LIFTING FORCES & TECHNICAL DATA

Outer Dia.	Lifting force vertical to the surface, lbf, at vacuum level			Lifting force parallel to the surface, lbf, at vacuum level			Volume	Min. curve radius	Max. vertical movement	Weight rubber part
in	6 -inHg	18 -inHg	27 -inHg	6 -inHg	18 -inHg	27 -inHg	in³	in	in	oz
4.53	30.8	77.1	104	—	—	—	19.0	2.40	1.40	4.23

MATERIAL SPECIFICATIONS

Material	Color	Hardness °Shore A	Temperature range °F
Nitrile-PVC, NPV	Black	50	32–194
Silicone, SIL	Red	50	-40–392
HNBR	Grey-blue	75	-22–284*

** For a shorter period of time up to 320°F*

MATERIAL RESISTANCE

Material	Wear resistance	Oil	Weather & ozone	Hydrolysis	Gasoline	Concentrated acids	Alcohol	Oxidation
Nitrile-PVC, NPV	Excellent	Excellent	Good	Good	Excellent	Fair	Good	Good
Silicone, SIL	Good	Poor	Excellent	Fair	Poor	Poor	Good	Excellent
HNBR	Excellent	Excellent	Excellent	Good	Excellent	Fair	Good	Excellent

ORDERING INFORMATION

	Suction cups with fitting	Weight (oz)	Part No.
A	Suction cup B110 Nitrile-PVC, G1/2" female Al, with mesh filter	9.04	B110.30.11UA
B	Suction cup B110 Nitrile-PVC, G3/8" female, clamp ring with mesh filter	12.7	B110.30.11NA
B	Suction cup B110 Nitrile-PVC, 3/8"NPSF female, clamp ring with mesh filter	12.7	B110.30.11NB
B	Suction cup B110 Nitrile-PVC, G1/2" female, clamp ring with mesh filter	12.7	B110.30.11NC
A	Suction cup B110 Silicone, G1/2" female Al, with mesh filter	9.04	B110.20.11UA
B	Suction cup B110 Silicone, G3/8" female, clamp ring with mesh filter	12.7	B110.20.11NA
B	Suction cup B110 Silicone, 3/8"NPSF female, clamp ring with mesh filter	12.7	B110.20.11NB
B	Suction cup B110 Silicone, G1/2" female, clamp ring with mesh filter	12.7	B110.20.11NC
A	Suction cup B110 HNBR, G1/2" female Al, with mesh filter	9.04	B110.37.11UA
B	Suction cup B110 HNBR, G3/8" female, clamp ring with mesh filter	12.7	B110.37.11NA
B	Suction cup B110 HNBR, 3/8"NPSF female, clamp ring with mesh filter	12.7	B110.37.11NB
B	Suction cup B110 HNBR, G1/2" female, clamp ring with mesh filter	12.7	B110.37.11NC

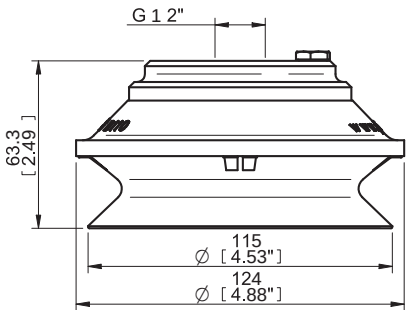

A

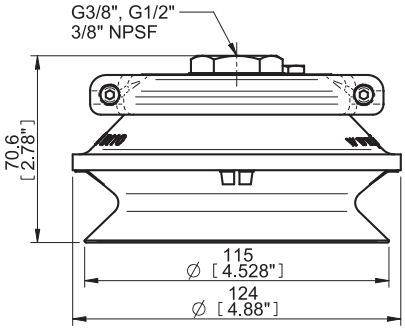

B

Rubber parts	Part No.
Suction cup B110 Nitrile-PVC	B110.30
Suction cup B110 Nitrile-PVC with washer	B110.30.W
Suction cup B110 Silicone	B110.20
Suction cup B110 Silicone with washer	B110.20.W
Suction cup B110 Therban®	B110.37
Suction cup B110 Therban® with washer	B110.37.W

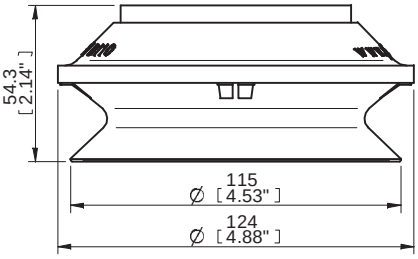

Fittings	Part No.
Fitting G1/2" female Al, with mesh filter	11UA
Fitting G3/8" female, clamp ring with mesh filter	11NA
Fitting 3/8" NPSF female, clamp ring with mesh filter	11NB
Fitting G1/2" female, clamp ring with mesh filter	11NC

B110-2

SUCTION CUP WITH SHORT BELLOWS AND FILTER DISK

- Suitable for level adjustment. Several short bellows in one lifting device can handle objects with height differences and varying shapes, for example embossed or corrugated plates.
- Lifting movement to separate small and thin objects.
- Only lightweight objects should be handled when the lifting force is parallel to the surface of the object, in order to achieve good precision and safe lifting movement.
- Filter disk made of PE.

LIFTING FORCES & TECHNICAL DATA

Outer Dia.	Lifting force vertical to the surface, lbf, at vacuum level			Lifting force parallel to the surface, lbf, at vacuum level			Volume	Min. curve radius	Max. vertical movement	Weight rubber part
in	6 -inHg	18 -inHg	27 -inHg	6 -inHg	18 -inHg	27 -inHg	in³	in	in	oz
4.53	30.8	77.1	104	—	—	—	19.0	2.40	1.40	4.23

MATERIAL SPECIFICATIONS

Material	Color	Hardness °Shore A	Temperature range °F
Nitrile-PVC, NPV	Black	50	32–194*
Silicone, SIL	Red	50	-40–392*

**Filter disk max. 176°F*

MATERIAL RESISTANCE

Material	Wear resistance	Oil	Weather & Ozone	Hydrolysis	Gasoline	Concentrated acids	Alcohol	Oxidation
Nitrile-PVC, NPV	Excellent	Excellent	Good	Good	Excellent	Fair	Good	Good
Silicone, SIL	Good	Poor	Excellent	Fair	Poor	Poor	Good	Excellent

ORDERING INFORMATION

	Suction cups with fitting	Weight (oz)	Part No.
A	Suction cup B110-2 Nitrile-PVC, G1/2" female AI, with mesh filter	9.04	B110-2.30.11UA
B	Suction cup B110-2 Nitrile-PVC, G3/8" female, clamp ring with mesh filter	12.7	B110-2.30.11NA
B	Suction cup B110-2 Nitrile-PVC, 3/8"NPSF female, clamp ring with mesh filter	12.7	B110-2.30.11NB
B	Suction cup B110-2 Nitrile-PVC, G1/2" female, clamp ring with mesh filter	12.7	B110-2.30.11NC
A	Suction cup B110-2 Silicone, G1/2" female AI, with mesh filter	9.04	B110-2.20.11UA
B	Suction cup B110-2 Silicone, G3/8" female, clamp ring with mesh filter	12.7	B110-2.20.11NA
B	Suction cup B110-2 Silicone, 3/8"NPSF female, clamp ring with mesh filter	12.7	B110-2.20.11NB
B	Suction cup B110-2 Silicone, G1/2" female, clamp ring with mesh filter	12.7	B110-2.20.11NC

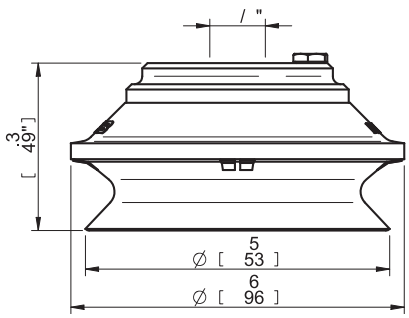

A

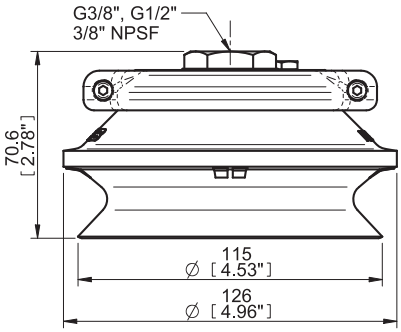

B

Rubber parts	Part No.
Suction cup B110-2 Nitrile-PVC	B110-2.30
Suction cup B110-2 Nitrile-PVC with washer	B110-2.30.W
Suction cup B110-2 Silicone	B110-2.20
Suction cup B110-2 Silicone with washer	B110-2.20.W

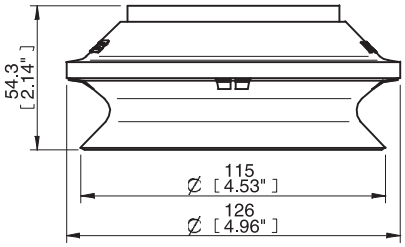

Fittings	Part No.
Fitting G1/2" female AI, with mesh filter	11UA
Fitting G3/8" female, clamp ring with mesh filter	11NA
Fitting 3/8" NPSF female, clamp ring with mesh filter	11NB
Fitting G1/2" female, clamp ring with mesh filter	11NC

Spare part	Material	Temperature range °F	Part No.
Filter for B110-2	PE	-40–176	31.50.249

B150

SUCTION CUP WITH SHORT BELLOWS

- Suitable for level adjustment. Several short bellows in one lifting device can handle objects with height differences and varying shapes, for example embossed or corrugated plates.
- The lifting movement can be used to separate small and thin objects.
- Only lightweight objects should be handled when the lifting force is parallel to the surface of the object, in order to achieve good precision and safe lifting movement.

LIFTING FORCES & TECHNICAL DATA

Outer Dia.	Lifting force vertical to the surface, lbf, at vacuum level			Lifting force parallel to the surface, lbf, at vacuum level			Volume	Min. curve radius	Max. vertical movement	Weight rubber part
in	6 -inHg	18 -inHg	27 -in hg	6 -inHg	18 -inHg	27 -inHg	in³	in	in	oz
6.10	66.1	154	199	—	—	—	40.0	3.00	1.77	9.35

MATERIAL SPECIFICATIONS

Material	Color	Hardness °Shore A	Temperature range °F
Nitrile-PVC, NPV	Black	50	32–194*
Silicone, SIL	Red	50	-40–392*

**Filter disk max. 176°F*

MATERIAL RESISTANCE

Material	Wear resistance	Oil	Weather & Ozone	Hydrolysis	Gasoline	Concentrated acids	Alcohol	Oxidation
Nitrile-PVC, NPV	Excellent	Excellent	Good	Good	Excellent	Fair	Good	Good
Silicone, SIL	Good	Poor	Excellent	Fair	Poor	Poor	Good	Excellent

ORDERING INFORMATION

	Suction cups with fitting	Weight (oz)	Part No.
A	Suction cup B150 Nitrile-PVC, G1/2" female Al, with mesh filter	19.4	B150.30.15UA
B	Suction cup B150 Nitrile-PVC, G1/2" female, clamp ring with mesh filter	21.9	B150.30.15NA
B	Suction cup B150 Nitrile-PVC, G3/4" female, clamp ring with mesh filter	21.9	B150.30.15NB
A	Suction cup B150 Silicone, G1/2" female Al, with mesh filter	19.4	B150.20.15UA
B	Suction cup B150 Silicone, G1/2" female, clamp ring with mesh filter	21.9	B150.20.15NA
B	Suction cup B150 Silicone, G3/4" female, clamp ring with mesh filter	21.9	B150.20.15NB

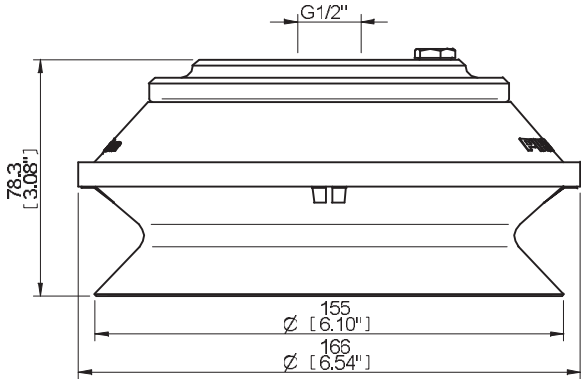

A

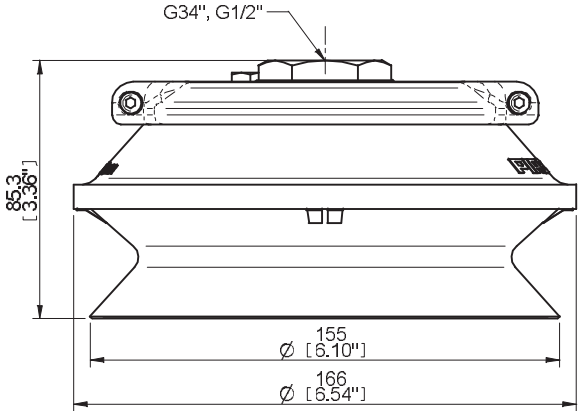

B

Rubber parts	Part No.
Suction cup B150 Nitrile-PVC	B150.30
Suction cup B150 Nitrile-PVC with washer	B150.30.W
Suction cup B150 Silicone	B150.20
Suction cup B150 Silicone with washer	B150.20.W

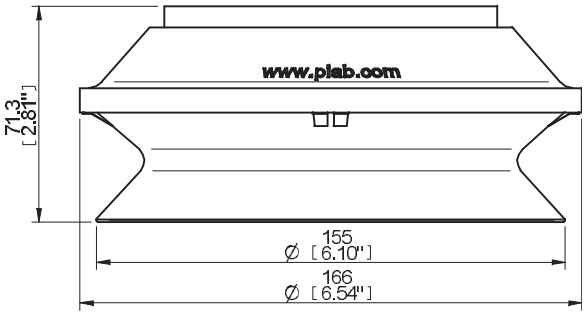

Fittings	Part No.
Fitting G1/2" female Al, with mesh filter	15UA
Fitting G1/2" female, clamp ring with mesh filter	15NA
Fitting G3/4" female, clamp ring with mesh filter	15NB

B75P

SUCTION CUP WITH SHORT BELLOWS

- Suitable for level adjustment and for uneven and porous surfaces such as cardboard, etc.
- Dual hardness allowing strength and stability in conjunction with softness and flexibility.
- DURAFLEX® material features the elasticity of rubber in combination with the wear resistance of polyurethane.
- The DURAFLEX® material is mark-free.

LIFTING FORCES & TECHNICAL DATA

Model	Outer Dia.	Lifting force vertical to the surface, lbf, at vacuum level			Lifting force parallel to the surface, lbf, at vacuum level			Volume	Min. curve radius	Max. vertical movement	Weight rubber part
	in	6 -inHg	18 -inHg	27 -inHg	6 -inHg	18 -inHg	27 -inHg	in³	in	in	oz
PU30°/60°	3.11	13.7	33.5	45.4	9.89	21.6	25.6	6.71	1.77	0.79	2.54
PU60°	3.11	18.7	44.1	57.3	27.2	49.5	67.0	6.71	1.77	0.79	2.54

MATERIAL SPECIFICATIONS

Material	Color	Hardness °Shore A	Temperature range °F
Polyurethane, PU30/PU60	Yellow/Green transparent	30/60	50–122
Polyurethane, PU60	Green transparent	60	50–122

MATERIAL RESISTANCE

Wear resistance	Oil	Weather & ozone	Hydrolysis	Gasoline	Concentrated acids	Ethanol	Methanol	Oxidation
Excellent	Excellent	Excellent	Fair	Fair	Fair	Fair	Poor	Poor

ORDERING INFORMATION

	Suction cups with fitting	Weight (oz)	Part No.
A	Suction cup B75P Polyurethane 30/60, 1/8"NPSF female, with mesh filter	5.01	B75P.4K.07NA
A	Suction cup B75P Polyurethane 30/60, G3/8" female, with mesh filter	5.01	B75P.4K.07ND
A	Suction cup B75P Polyurethane 30/60, 3/8"NPSF female, with mesh filter	5.01	B75P.4K.07NE
A	Suction cup B75P Polyurethane 30/60, G1/2" female, with mesh filter	5.01	B75P.4K.07NF
A	Suction cup B75P Polyurethane 60, 1/8"NPSF female, with mesh filter	5.01	B75P.4E.07NA
A	Suction cup B75P Polyurethane 60, G3/8" female, with mesh filter	5.01	B75P.4E.07ND
A	Suction cup B75P Polyurethane 60, 3/8"NPSF female, with mesh filter	5.01	B75P.4E.07NE
A	Suction cup B75P Polyurethane 60, G1/2" female, with mesh filter	5.01	B75P.4E.07NF
B	Suction cup B75P Polyurethane 30/60, thread insert G3/8" male, with mesh filter for Vacuum Gripper System (VGS)	2.72	B75P.5K.G40M
B	Suction cup B75P Polyurethane 60, thread insert G3/8" male, with mesh filter for Vacuum Gripper System (VGS)	2.72	B75P.5E.G40M
C	Suction cup B75P Polyurethane 30/60, brass 3/8"NPSF female	3.81	B75P.5K.N40W
C	Suction cup B75P Polyurethane 60, brass 3/8"NPSF female	3.81	B75P.5E.N40W

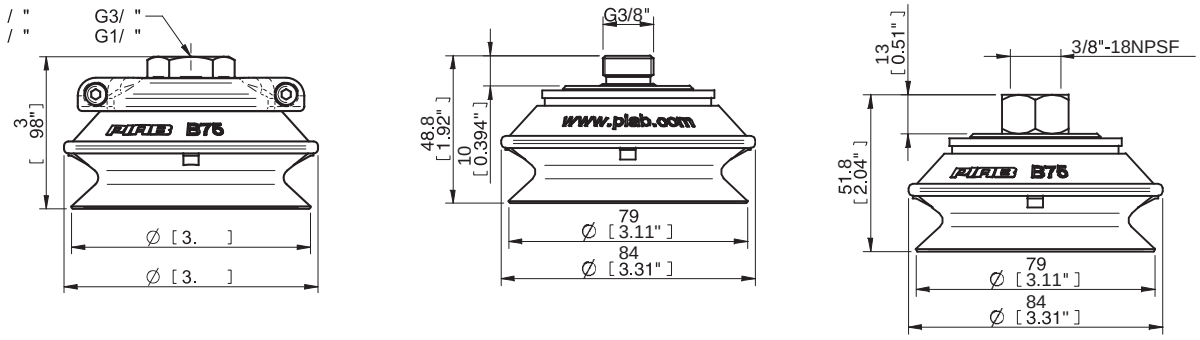

A B C

	Rubber parts	Part No.
A	Suction cup B75P Polyurethane 30/60	B75P.4K
A	Suction cup B75P Polyurethane 60	B75P.4E
B	Suction cup B75P Polyurethane 30/60 with collar for Vacuum Gripper System (VGS)	B75P.5K
B	Suction cup B75P Polyurethane 60 with collar for Vacuum Gripper System (VGS)	B75P.5E

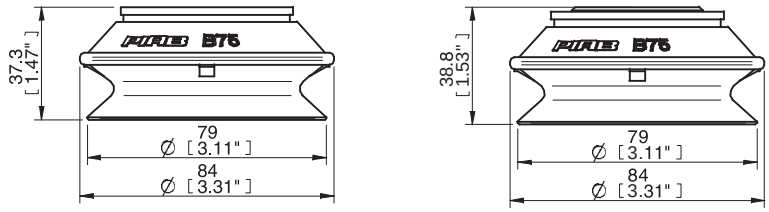

A B

Fittings	Part No.
Fitting 1/8" NPSF female, with mesh filter	07NA
Fitting G3/8" female, with mesh filter	07ND
Fitting 3/8" NPSF female, with mesh filter	07NE
Fitting G1/2" female, with mesh filter	07NF
Thread insert G3/8" male, with O-ring and mesh filter for Vacuum Gripper System (VGS)	01.07.148

B15MF

SUCTION CUP WITH SHORT BELLOWS, MARK FREE

- Suction cup of TPU, a mark free material that leaves no trace on the object being handled.
- Suitable for level adjustment.
- Lifting movement to separate small and thin objects.
- Only lightweight objects should be handled when the lifting force is parallel to the surface.

LIFTING FORCES & TECHNICAL DATA

Outer Dia.	Lifting force vertical to the surface, lbf, at vacuum level			Lifting force parallel to the surface, lbf, at vacuum level			Volume	Min. curve radius	Max. vertical movement	Weight rubber part
in	6 -inHg	18 -inHg	27 -inHg	6 -inHg	18 -inHg	27 -inHg	in^3	in	in	oz
0.63	0.90	1.80	2.70	1.01	1.57	2.25	0.07	0.43	0.08	0.05

MATERIAL SPECIFICATIONS

Material	Color	Hardness °Shore A	Temperature range °F
Thermoelastic polyurethane, TPU	Transparent white	81	-4-176

MATERIAL RESISTANCE

Wear resistance	Oil	Weather & Ozone	Hydrolysis	Gasoline	Concentrated acids	Alcohol	Oxidation
Excellent	Excellent	Excellent	Poor	Poor	Poor	Good	Good

ORDERING INFORMATION

Suction cup with fitting	Weight (oz)	Part No.
Suction cup B15MF Thermoelastic polyurethane, M5 male	0.13	B15MF.40.01AC

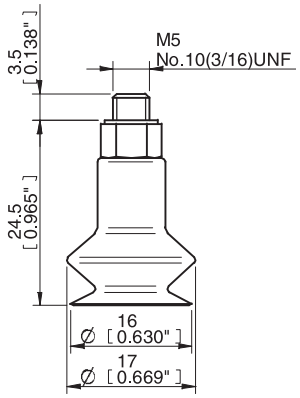

Rubber parts	Part No.
Suction cup B15MF Thermoelastic polyurethane	B15MF.40

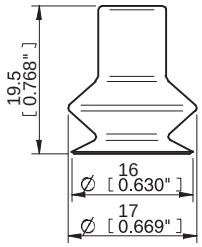

Fittings	Part No.
Fitting M5 male	01AC

B20MF

SUCTION CUP WITH SHORT BELLOWS, MARK FREE

- Suction cup of TPU, a mark free material that leaves no trace on the object being handled.
- Suitable for level adjustment.
- Lifting movement to separate small and thin objects.
- Only lightweight objects should be handled when the lifting force is parallel to the surface.

LIFTING FORCES & TECHNICAL DATA

Outer Dia.	Lifting force vertical to the surface, lbf, at vacuum level			Lifting force parallel to the surface, lbf, at vacuum level			Volume	Min. curve radius	Max. vertical movement	Weight rubber part
in	6 -inHg	18 -inHg	27 -inHg	6 -inHg	18 -inHg	27 -inHg	in³	in	in	oz
0.87	1.01	3.48	4.72	1.42	2.47	4.27	0.16	0.43	0.31	0.07

MATERIAL SPECIFICATIONS

Material	Color	Hardness °Shore A	Temperature range °F
Thermoelastic polyurethane, TPU	Transparent white	81	-4-176

MATERIAL RESISTANCE

Wear resistance	Oil	Weather & Ozone	Hydrolysis	Gasoline	Concentrated acids	Alcohol	Oxidation
Excellent	Excellent	Excellent	Poor	Poor	Poor	Good	Good

ORDERING INFORMATION

	Suction cups with fitting	Weight (oz)	Part No.
A	Suction cup B20MF Thermoelastic polyurethane, M5 female	0.18	B20MF.40.02AA
A	Suction cup B20MF Thermoelastic polyurethane, M5 female, with dual flow control valve	0.18	B20MF.40.02DA
B	Suction cup B20MF Thermoelastic polyurethane, G1/8" male, with mesh filter	0.18	B20MF.40.02AB
B	Suction cup B20MF Thermoelastic polyurethane, G1/8" male, with dual flow control valve	0.18	B20MF.40.02DB
B	Suction cup B20MF Thermoelastic polyurethane, 1/8" NPT male, with mesh filter	0.18	B20MF.40.02AC
B	Suction cup B20MF Thermoelastic polyurethane, 1/8" NPT male, with dual flow control valve	0.18	B20MF.40.02DC
C	Suction cup B20MF Thermoelastic polyurethane, G1/8" male/M5 female	0.14	B20MF.40.02AD
C	Suction cup B20MF Thermoelastic polyurethane, G1/8" male/M5 female, with mesh filter	0.14	B20MF.40.02AF
C	Suction cup B20MF Thermoelastic polyurethane, G1/8" male/M5 fem., with dual flow control valve	0.14	B20MF.40.02DD
D	Suction cup B20MF Thermoelastic polyurethane, 5xM5 female	0.42	B20MF.40.02AE
D	Suction cup B20MF Thermoelastic polyurethane, 5xM5 female, with dual flow control valve	0.42	B20MF.40.02DE

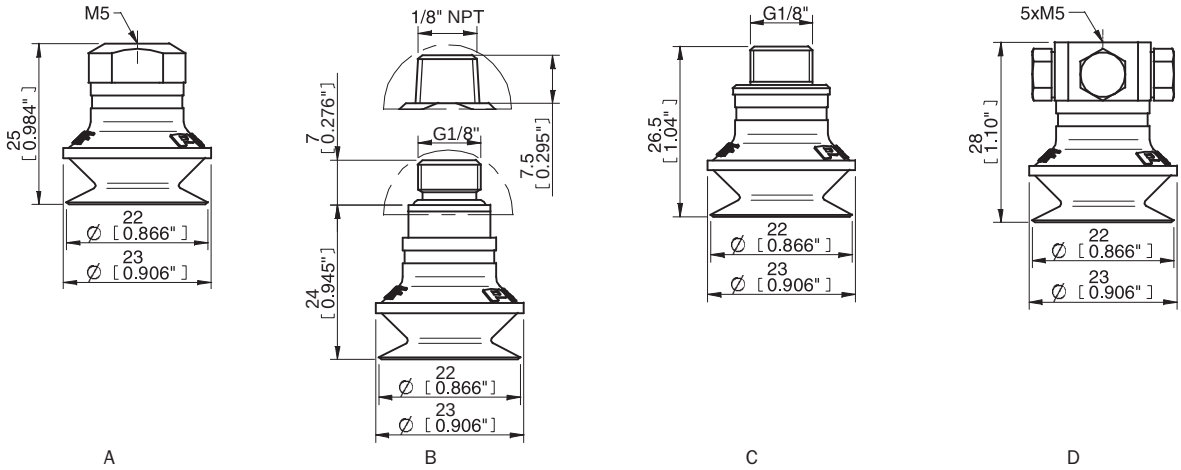

Rubber parts	Part No.
Suction cup B20MF Thermoelastic polyurethane	B20MF.40

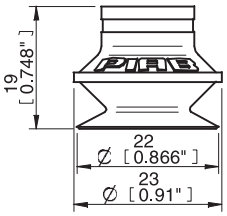

Fittings	Part No.
Fitting M5 female	02AA
Fitting M5 female, with dual flow control valve	02DA
Fitting G1/8" male, with mesh filter	02AB
Fitting G1/8" male, with mesh filter and dual flow control valve	02DB
Fitting 1/8" NPT male, with mesh filter	02AC
Fitting 1/8" NPT male, with dual flow control valve	02DC
Fitting G1/8" male/M5 female	02AD
Fitting G1/8" male/M5 female, with mesh filter	02AF
Fitting G1/8" male/M5 female, with dual flow control valve	02DD
Fitting 5xM5 female	02AE
Fitting 5xM5 female, with dual flow control valve	02DE

B30MF

SUCTION CUP WITH SHORT BELLOWS, MARK FREE

- Suction cup of TPU, a mark free material that leaves no trace on the object being handled.
- Suitable for level adjustment.
- Lifting movement to separate small and thin objects.
- Only lightweight objects should be handled when the lifting force is parallel to the surface.

LIFTING FORCES & TECHNICAL DATA

Outer Dia.	Lifting force vertical to the surface, lbf, at vacuum level			Lifting force parallel to the surface, lbf, at vacuum level			Volume	Min. curve radius	Max. vertical movement	Weight rubber part
in	6 -inHg	18 -inHg	27 -inHg	6 -inHg	18 -inHg	27 -inHg	in³	in	in	oz
1.34	2.70	8.99	12.3	3.20	7.19	9.22	0.60	0.65	0.47	0.25

MATERIAL SPECIFICATIONS

Material	Color	Hardness °Shore A	Temperature range °F
Thermoelastic polyurethane, TPU	Transparent white	81	-4-176

MATERIAL RESISTANCE

Wear resistance	Oil	Weather & Ozone	Hydrolysis	Gasoline	Concentrated acids	Alcohol	Oxidation
Excellent	Excellent	Excellent	Poor	Poor	Poor	Good	Good

ORDERING INFORMATION

	Suction cups with fitting	Weight (oz)	Part No.
A	Suction cup B30MF Thermoelastic polyurethane, 1/8"NPSF female	0.46	B30MF.40.04AA
A	Suction cup B30MF Thermoelastic polyurethane, 1/8"NPSF female, with mesh filter	0.46	B30MF.40.04AG
A	Suction cup B30MF Thermoelastic polyurethane, 1/8"NPSF female, with dual flow control valve	0.46	B30MF.40.04DA
B	Suction cup B30MF Thermoelastic polyurethane, G1/4" male, with mesh filter	0.50	B30MF.40.04AB
B	Suction cup B30MF Thermoelastic polyurethane, G1/4" male, with dual flow control valve and mesh filter	0.50	B30MF.40.04DB
B	Suction cup B30MF Thermoelastic polyurethane, 1/4" NPT male, with mesh filter	0.50	B30MF.40.04AC
B	Suction cup B30MF Thermoelastic polyurethane, 1/4" NPT male, with dual flow control valve	0.50	B30MF.40.04DC
C	Suction cup B30MF Thermoelastic polyurethane, G3/8" male, with mesh filter	0.60	B30MF.40.04AD
C	Suction cup B30MF Thermoelastic polyurethane, G3/8" male, with dual flow control valve and mesh filter	0.60	B30MF.40.04DD
C	Suction cup B30MF Thermoelastic polyurethane, 3/8" NPT male, with mesh filter	0.60	B30MF.40.04AE
C	Suction cup B30MF Thermoelastic polyurethane, 3/8" NPT male, with dual flow control valve	0.60	B30MF.40.04DE
D	Suction cup B30MF Thermoelastic polyurethane, 5x1/8"NPSF female	0.96	B30MF.40.04AF
D	Suction cup B30MF Thermoelastic polyurethane, 5x1/8"NPSF female, with dual flow control valve	0.96	B30MF.40.04DF

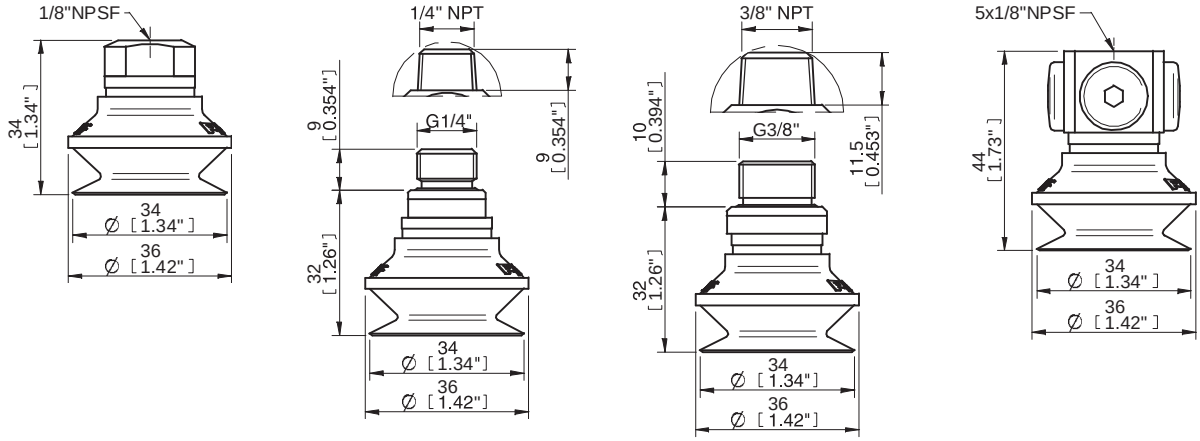

A B C D

Rubber parts	Part No.
Suction cup B30MF Thermoelastic polyurethane	B30MF.40

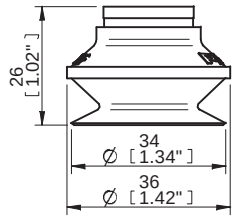

Fittings	Part No.
Fitting 1/8"NPSF female	04AA
Fitting 1/8"NPSF female, with mesh filter	04AG
Fitting 1/8"NPSF female, with dual flow control valve	04DA
Fitting G1/4" male, with mesh filter	04AB
Fitting G1/4" male, with dual flow control valve	04DB
Fitting 1/4" NPT male, with mesh filter	04AC
Fitting 1/4" NPT male, with dual flow control valve	04DC
Fitting G3/8" male, with mesh filter	04AD
Fitting G3/8" male, with dual flow control valve	04DD
Fitting 3/8" NPT male, with mesh filter	04AE
Fitting 3/8" NPT male, with dual flow control valve	04DE
Fitting 5x1/8"NPSF female	04AF
Fitting 5x1/8"NPSF female, with dual flow control valve	04DF

B40MF

SUCTION CUP WITH SHORT BELLOWS, MARK FREE

- Suction cup of TPU, a mark free material that leaves no trace on the object being handled.
- Suitable for level adjustment.
- Lifting movement to separate small and thin objects.
- Only lightweight objects should be handled when the lifting force is parallel to the surface.

LIFTING FORCES & TECHNICAL DATA

Outer Dia.	Lifting force vertical to the surface, lbf, at vacuum level			Lifting force parallel to the surface, lbf, at vacuum level			Volume	Min. curve radius	Max. vertical movement	Weight rubber part
in	6 -inHg	18 -inHg	27 -inHg	6 -inHg	18 -inHg	27 -inHg	in^3	in	in	oz
1.65	4.05	12.8	16.2	3.06	8.99	10.6	0.90	0.87	0.43	0.35

MATERIAL SPECIFICATIONS

Material	Color	Hardness °Shore A	Temperature range °F
Thermoelastic polyurethane, TPU	Transparent white	81	-4-176

MATERIAL RESISTANCE

Wear resistance	Oil	Weather & Ozone	Hydrolysis	Gasoline	Concentrated acids	Alcohol	Oxidation
Excellent	Excellent	Excellent	Poor	Poor	Poor	Good	Good

ORDERING INFORMATION

	Suction cups with fitting	Weight (oz)	Part No.
A	Suction cup B40MF Thermoelastic polyurethane, 1/8"NPSF female	0.56	B40MF.40.04AA
A	Suction cup B40MF Thermoelastic polyurethane, 1/8"NPSF female, with mesh filter	0.56	B40MF.40.04AG
A	Suction cup B40MF Thermoelastic polyurethane, 1/8"NPSF female, with dual flow control valve	0.56	B40MF.40.04DA
B	Suction cup B40MF Thermoelastic polyurethane, G1/4" male, with mesh filter	0.60	B40MF.40.04AB
B	Suction cup B40MF Thermoelastic polyurethane, G1/4" male, with mesh filter and dual flow control valve	0.60	B40MF.40.04DB
B	Suction cup B40MF Thermoelastic polyurethane, 1/4" NPT male, with mesh filter	0.60	B40MF.40.04AC
B	Suction cup B40MF Thermoelastic polyurethane, G1/4" male, with dual flow control valve	0.60	B40MF.40.04DC
C	Suction cup B40MF Thermoelastic polyurethane, G3/8" male, with mesh filter	0.70	B40MF.40.04AD
C	Suction cup B40MF Thermoelastic polyurethane, G3/8" male, with mesh filter and dual flow control valve	0.70	B40MF.40.04DD
C	Suction cup B40MF Thermoelastic polyurethane, 3/8" NPT male, with mesh filter	0.70	B40MF.40.04AE
C	Suction cup B40MF Thermoelastic polyurethane, 3/8" NPT male, with dual flow control valve	0.70	B40MF.40.04DE
D	Suction cup B40MF Thermoelastic polyurethane, 5x1/8"NPSF female	1.06	B40MF.40.04AF
D	Suction cup B40MF Thermoelastic polyurethane, 5x1/8"NPSF female, with dual flow control valve	1.06	B40MF.40.04DF

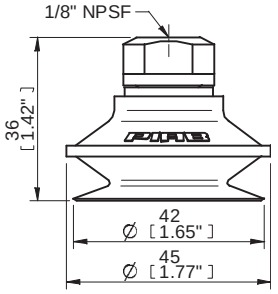

A

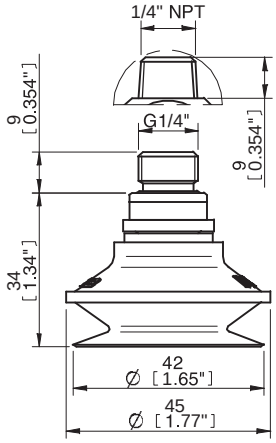

B

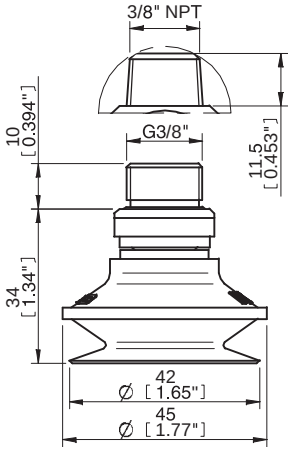

C

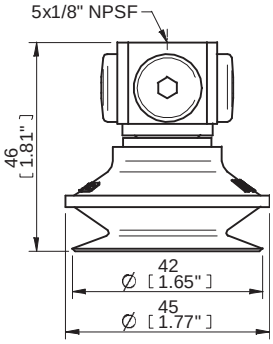

D

Rubber parts	Part No.
Suction cup B40MF Thermoelastic polyurethane	B40MF.40

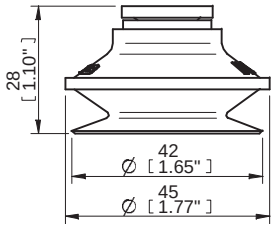

Fittings	Part No.
Fitting 1/8"NPSF female	04AA
Fitting 1/8"NPSF female, with mesh filter	04AG
Fitting 1/8"NPSF female, with dual flow control valve	04DA
Fitting G1/4" male, with mesh filter	04AB
Fitting G1/4" male, with dual flow control valve	04DB
Fitting 1/4" NPT male, with mesh filter	04AC
Fitting 1/4" NPT male, with dual flow control valve	04DC
Fitting G3/8" male, with mesh filter	04AD
Fitting G3/8" male, with dual flow control valve	04DD
Fitting 3/8" NPT male, with mesh filter	04AE
Fitting 3/8" NPT male, with dual flow control valve	04DE
Fitting 5x1/8"NPSF female	04AF
Fitting 5x1/8"NPSF female, with dual flow control valve	04DF

B50MF

SUCTION CUP WITH SHORT BELLOWS, MARK FREE

- Suction cup of TPU, a mark free material that leaves no trace on the object being handled.
- Suitable for level adjustment.
- Lifting movement to separate small and thin objects.
- Only lightweight objects should be handled when the lifting force is parallel to the surface.

LIFTING FORCES & TECHNICAL DATA

Outer Dia.	Lifting force vertical to the surface, lbf, at vacuum level			Lifting force parallel to the surface, lbf, at vacuum level			Volume	Min. curve radius	Max. vertical movement	Weight rubber part
in	6 -inHg	18 -inHg	27 -inHg	6 -inHg	18 -inHg	27 -inHg	in³	in	in	oz
2.09	6.74	20.9	30.6	5.17	14.2	21.8	1.95	1.00	0.51	0.67

MATERIAL SPECIFICATIONS

Material	Color	Hardness °Shore A	Temperature range °F
Thermoelastic polyurethane, TPU	Transparent white	81	-4-176

MATERIAL RESISTANCE

Wear resistance	Oil	Weather & Ozone	Hydrolysis	Gasoline	Concentrated acids	Alcohol	Oxidation
Excellent	Excellent	Excellent	Poor	Poor	Poor	Good	Good

ORDERING INFORMATION

	Suction cups with fitting	Weight (oz)	Part No.
A	Suction cup B50MF Thermoelastic polyurethane, 1/8"NPSF female	1.02	B50MF.40.05AA
A	Suction cup B50MF Thermoelastic polyurethane, 1/8"NPSF female, with mesh filter	1.02	B50MF.40.05AG
A	Suction cup B50MF Thermoelastic polyurethane, 1/8"NPSF female, with dual flow control valve	1.02	B50MF.40.05DA
B	Suction cup B50MF Thermoelastic polyurethane, G1/4" male, with mesh filter	1.02	B50MF.40.05AB
B	Suction cup B50MF Thermoelastic polyurethane, G1/4" male, with dual flow control valve and mesh filter	1.02	B50MF.40.05DB
B	Suction cup B50MF Thermoelastic polyurethane, 1/4" NPT male, with mesh filter	1.02	B50MF.40.05AC
B	Suction cup B50MF Thermoelastic polyurethane, 1/4" NPT male, with dual flow control valve	1.02	B50MF.40.05DC
C	Suction cup B50MF Thermoelastic polyurethane, G3/8" male, with mesh filter	1.02	B50MF.40.05AD
C	Suction cup B50MF Thermoelastic polyurethane, G3/8" male, with dual flow control valve and mesh filter	1.02	B50MF.40.05DD
C	Suction cup B50MF Thermoelastic polyurethane, 3/8" NPT male, with mesh filter	1.02	B50MF.40.05AE
C	Suction cup B50MF Thermoelastic polyurethane, 3/8" NPT male, with dual flow control valve	1.02	B50MF.40.05DE
D	Suction cup B50MF Thermoelastic polyurethane, 5x1/8"NPSF female	1.73	B50MF.40.05AF
D	Suction cup B50MF Thermoelastic polyurethane, 5x1/8"NPSF female, with dual flow control valve	1.73	B50MF.40.05DF

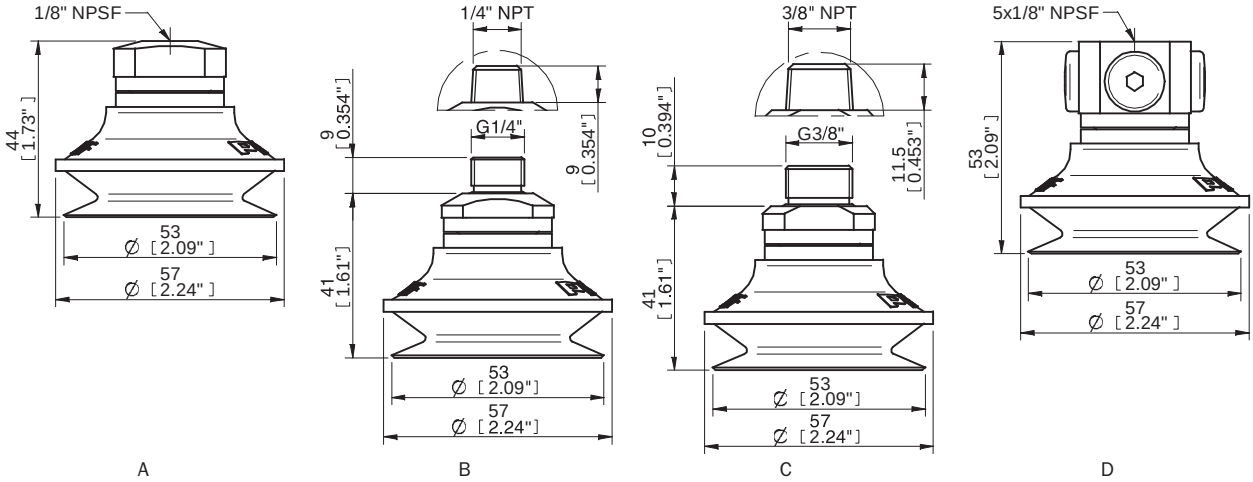

A B C D

Rubber parts	Part No.
Suction cup B50MF Thermoelastic polyurethane	B50MF.40

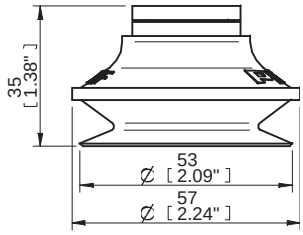

Fittings	Part No.
Fitting 1/8"NPSF female	05AA
Fitting 1/8"NPSF female, with mesh filter	05AG
Fitting 1/8"NPSF female, with dual flow control valve	05DA
Fitting G1/4" male, with mesh filter	05AB
Fitting G1/4" male, with dual flow control valve	05DB
Fitting 1/4" NPT male, with mesh filter	05AC
Fitting 1/4" NPT male, with dual flow control valve	05DC
Fitting G3/8" male, with mesh filter	05AD
Fitting G3/8" male, with mesh filter and dual flow control valve	05DD
Fitting 3/8" NPT male, with mesh filter	05AE
Fitting 3/8" NPT male, with dual flow control valve	05DE
Fitting 5x1/8"NPSF female	05AF
Fitting 5x1/8"NPSF female, with dual flow control valve	05DF

BF80P

SUCTION CUP WITH SHORT BELLOWS

- Suitable for uneven surfaces.
- Dual hardness allowing strength and stability in conjunction with softness and flexibility.
- DURAFLEX® material features the elasticity of rubber in combination with the wear resistance of polyurethane.
- The DURAFLEX® material is mark-free.

LIFTING FORCES & TECHNICAL DATA

Material	Outer Dia.	Lifting force vertical to the surface, lbf at vacuum level			Lifting force parallel to the surface, lbf, at vacuum level			Volume	Min. curve radius	Max. vertical movement	Weight with fitting
	in	6 -inHg	18 -inHg	27 -inHg	6 -inHg	18 -inHg	27 -inHg	in³	in	in	oz
PU30°/50°	3.31	16.4	35.3	44.1	12.1	19.8	26.3	2.44	5.20	0.59	1.87
PU60°	3.31	22.0	50.6	66.1	15.3	28.6	37.3	2.44	5.20	0.59	1.87

MATERIAL SPECIFICATIONS

Material	Color	Hardness °Shore A	Temperature range °F
Polyurethane, PU30	Yellow	30	50-122
Polyurethane, PU50	Blue transparent	50	50-122
Polyurethane, PU60	Green transparent	60	50-122

MATERIAL RESISTANCE

Wear resistance	Oil	Weather & ozone	Hydrolysis	Gasoline	Concentrated acids	Ethanol	Methanol	Oxidation
Excellent	Excellent	Excellent	Fair	Fair	Fair	Fair	Poor	Poor

ORDERING INFORMATION

	Suction cups with fitting	Part No.
A	Suction cup BF80P Polyurethane 30/50, G3/8" female	BF80P.4H.08UA
A	Suction cup BF80P Polyurethane 30/50, 3/8"NPSF female	BF80P.4H.08UB
A	Suction cup BF80P Polyurethane 60, G3/8" female	BF80P.4E.08UA
A	Suction cup BF80P Polyurethane 60, 3/8"NPSF female	BF80P.4E.08UB
B	Suction cup BF80P Polyurethane 30/50, G3/8" male with mesh filter	BF80P.4H.08UG
B	Suction cup BF80P Polyurethane 60, G3/8" male with mesh filter	BF80P.4E.08UG
B	Suction cup BF80P Polyurethane 30/50, G3/8" male	BF80P.4H.08UD
B	Suction cup BF80P Polyurethane 60, G3/8" male	BF80P.4E.08UD

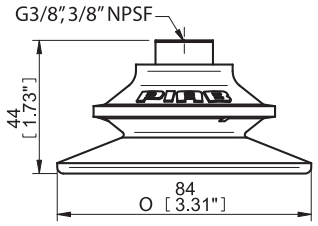

A

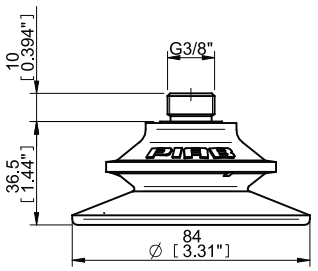

B

BF110P

SUCTION CUP WITH SHORT BELLOWS

- Suitable for uneven surfaces.
- Dual hardness allowing strength and stability in conjunction with softness and flexibility.
- DURAFLEX® material features the elasticity of rubber in combination with the wear resistance of polyurethane.
- The DURAFLEX® material is mark-free.

LIFTING FORCES & TECHNICAL DATA

Material	Outer Dia.	Lifting force vertical to the surface, lbf at vacuum level			Lifting force parallel to the surface, lbf, at vacuum level			Volume	Min. curve radius	Max. vertical movement	Weight with fitting
	in	6 -inHg	18 -inHg	27 -inHg	6 -inHg	18 -inHg	27 -inHg	in³	in	in	oz
PU30°/60°	4.53	28.8	51.5	50.6	23.8	47.2	55.3	6.71	2.17	0.94	3.88
PU60°	4.53	36.2	75.1	65.9	27.7	51.9	68.6	6.71	2.76	0.94	3.88

MATERIAL SPECIFICATIONS

Material	Color	Hardness, °Shore A	Temperature range, °F
Polyurethane, PU30/PU60	Yellow/Green transparent	30/60	50–122
Polyurethane, PU60	Green transparent	60	50–122

MATERIAL RESISTANCE

Wear resistance	Oil	Weather & ozone	Hydrolysis	Gasoline	Concentrated acids	Ethanol	Methanol	Oxidation
Excellent	Excellent	Excellent	Fair	Fair	Fair	Fair	Poor	Poor

ORDERING INFORMATION

	Suction cups with fitting	Part No.
A	Suction cup BF110P Polyurethane 30/60, thread insert G3/8" male with mesh filter	BF110P.5K.G40M
B	Suction cup BF110P Polyurethane 30/60, 3/8"NPSF female	BF110P.5K.N40W
A	Suction cup BF110P Polyurethane 60, thread insert G3/8" male with mesh filter	BF110P.5E.G40M
B	Suction cup BF110P Polyurethane 60, 3/8"NPSF female	BF110P.5E.N40W

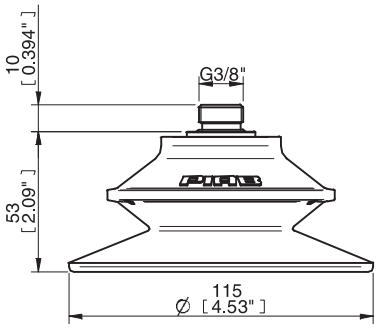

A

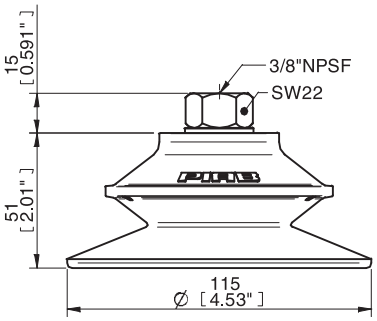

B

Rubber parts	Part No.
Suction cup BF110P Polyurethane 30/60, with collar for thread insert for Vacuum Gripper System (VGS)	BF110P.5K
Suction cup BF110P Polyurethane 60, with collar for thread insert for Vacuum Gripper System (VGS)	BF110P.5E

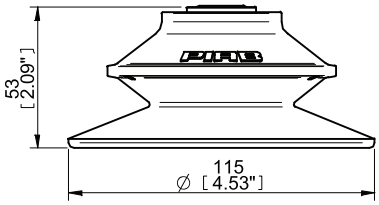

Fittings	Part No.
Thread insert G3/8" male, with O-ring and mesh filter for Vacuum Gripper System (VGS)	01.07.148

BL20-2

SUCTION CUP WITH LONG BELLOWS

- Suitable for level adjustment.
- Lifting movement to separate small and thin objects.
- Less suitable when the lifting force is parallel to the surface of the object.
- Optional reinforcement rings made of polyamide.

LIFTING FORCES & TECHNICAL DATA

Outer Dia.	Lifting force vertical to the surface, lbf, at vacuum level			Lifting force parallel to the surface, lbf, at vacuum level			Volume	Min. curve radius	Max. vertical movement	Weight rubber part
in	6 -inHg	18 -inHg	27 -inHg	6 -inHg	18 -inHg	27 -inHg	in³	in	in	oz
0.79	0.07/0.70*	0.14/1.40*	—	—	—	—	0.24	0.16	0.51	0.11

**Lifting force with reinforcement rings.*

MATERIAL SPECIFICATIONS

Material	Color	Hardness °Shore A	Temperature range °F
Chloroprene, CR	Black	60	-40–230
Silicone, SIL	Red	50	-40–392

MATERIAL RESISTANCE

Material	Wear resistance	Oil	Weather & ozone	Hydrolysis	Gasoline	Concentrated acids	Alcohol	Oxidation
Chloroprene, CR	Excellent	Fair	Good	Good	Fair	Poor	Good	Good
Silicone, SIL	Good	Poor	Excellent	Fair	Poor	Poor	Good	Excellent

ORDERING INFORMATION

	Suction cups with fitting	Weight (oz)	Part No.
A	Suction cup BL20-2 Chloroprene, M5 female	0.22	BL20-2.10.02AA
A	Suction cup BL20-2 Chloroprene, M5 female, with dual flow control valve	0.22	BL20-2.10.02DA
B	Suction cup BL20-2 Chloroprene, G1/8" male, with mesh filter	0.22	BL20-2.10.02AB
B	Suction cup BL20-2 Chloroprene, G1/8" male, with mesh filter and dual flow control valve	0.22	BL20-2.10.02DB
B	Suction cup BL20-2 Chloroprene, 1/8" NPT male, with mesh filter	0.22	BL20-2.10.02AC
B	Suction cup BL20-2 Chloroprene, 1/8" NPT male, with dual flow control valve	0.22	BL20-2.10.02DC
C	Suction cup BL20-2 Chloroprene, G1/8" male/M5 female	0.18	BL20-2.10.02AD
C	Suction cup BL20-2 Chloroprene, G1/8" male/M5 female, with mesh filter	0.18	BL20-2.10.02AF
C	Suction cup BL20-2 Chloroprene, G1/8" male/M5 female, with dual flow control valve	0.18	BL20-2.10.02DD
D	Suction cup BL20-2 Chloroprene, 5xM5 female	0.46	BL20-2.10.02AE
D	Suction cup BL20-2 Chloroprene, 5xM5 female, with dual flow control valve	0.46	BL20-2.10.02DE
E	Suction cup BL20-2 Chloroprene, G1/8" male/M5 female, PA	0.17	BL20-2.10.02CD
A	Suction cup BL20-2 Silicone, M5 female	0.22	BL20-2.20.02AA
A	Suction cup BL20-2 Silicone, M5 female, with dual flow control valve	0.22	BL20-2.20.02DA
B	Suction cup BL20-2 Silicone, G1/8" male, with mesh filter	0.22	BL20-2.20.02AB
B	Suction cup BL20-2 Silicone, G1/8" male, with mesh filter and dual flow control valve	0.22	BL20-2.20.02DB
B	Suction cup BL20-2 Silicone, 1/8" NPT male, with mesh filter	0.22	BL20-2.20.02AC
B	Suction cup BL20-2 Silicone, 1/8" NPT male, with dual flow control valve	0.22	BL20-2.20.02DC
C	Suction cup BL20-2 Silicone, G1/8" male/M5 female	0.18	BL20-2.20.02AD
C	Suction cup BL20-2 Silicone, G1/8" male/M5 female, with mesh filter	0.18	BL20-2.20.02AF
C	Suction cup BL20-2 Silicone, G1/8" male/M5 female, with dual flow control valve	0.18	BL20-2.20.02DD
D	Suction cup BL20-2 Silicone, 5xM5 female	0.46	BL20-2.20.02AE
D	Suction cup BL20-2 Silicone, 5xM5 female, with dual flow control valve	0.46	BL20-2.20.02DE
E	Suction cup BL20-2 Silicone, G1/8" male/M5 female, PA	0.17	BL20-2.20.02CD

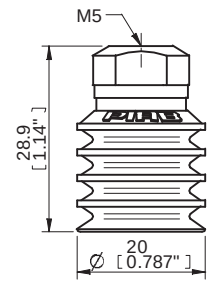

A

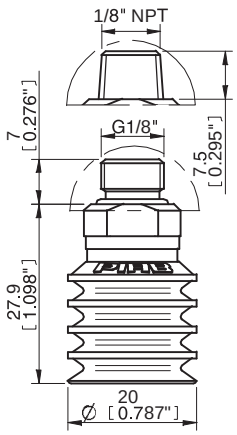

B

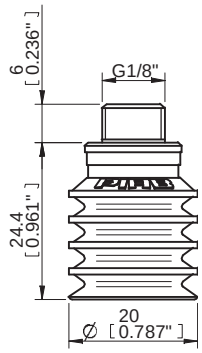

C

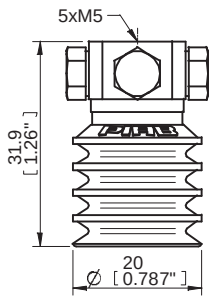

D

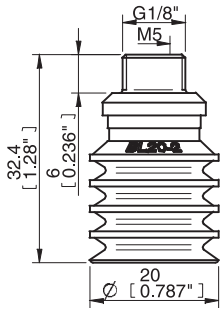

E

Rubber parts	Part No.
Suction cup BL20-2 Chloroprene	BL20-2.10
Suction cup BL20-2 Silicone	BL20-2.20

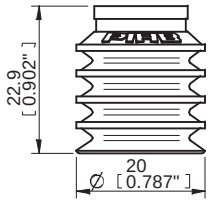

Fittings	Part No.
Fitting M5 female	02AA
Fitting M5 female, with dual flow control valve	02DA
Fitting G1/8" male, with mesh filter	02AB
Fitting G1/8" male, with mesh filter and dual flow control valve	02DB
Fitting 1/8" NPT male, with mesh filter	02AC
Fitting 1/8" NPT male, with dual flow control valve	02DC
Fitting G1/8" male/M5 female	02AD
Fitting G1/8" male/M5 female, with mesh filter	02AF
Fitting G1/8" male/M5 female, with dual flow control valve	02DD
Fitting 5xM5 female	02AE
Fitting 5xM5 female, with dual flow control valve	02DE
Fitting G1/8" male/M5 female, PA	02CD

Spare Part	Material	Temperature range °F	Part No.
Reinforcement ring for BL20-2, 4x	Polyamide, PA	-40–230	31.50.071

BL30-2

SUCTION CUP WITH LONG BELLOWS

- Suitable for level adjustment.
- Lifting movement to separate small and thin objects.
- Less suitable when the lifting force is parallel to the surface of the object.
- Optional reinforcement rings made of polyamide.

LIFTING FORCES & TECHNICAL DATA

Outer Dia	Lifting force vertical to the surface, lbf, at vacuum level			Lifting force parallel to the surface, lbf, at vacuum level			Volume	Min. curve radius	Max. vertical movement	Weight rubber part
in	6 -inHg	18 -inHg	27 -inHg	6 -inHg	18 -inHg	27 -inHg	in³	in	in	oz
1.18	0.14/1.40*	0.36/3.60*	—	—	—	—	0.61	0.31	0.79	0.25

**Lifting force with reinforcement rings.*

MATERIAL SPECIFICATIONS

Material	Color	Hardness, °Shore A	Temperature range, °F
Chloroprene, CR	Black	60	-40–230
Silicone, SIL	Red	50	-40–392

MATERIAL RESISTANCE

Material	Wear resistance	Oil	Weather & ozone	Hydrolysis	Gasoline	Concentrated acids	Alcohol	Oxidation
Chloroprene, CR	Excellent	Fair	Good	Good	Fair	Poor	Good	Good
Silicone, SIL	Good	Poor	Excellent	Fair	Poor	Poor	Good	Excellent

ORDERING INFORMATION

	Suction cups with fitting	Weight (oz)	Part No.
A	Suction cup BL30-2 Chloroprene, 1/8"NPSF female	0.39	BL30-2.10.04AA
A	Suction cup BL30-2 Chloroprene, 1/8"NPSF female, with mesh filter	0.39	BL30-2.10.04AG
A	Suction cup BL30-2 Chloroprene, 1/8"NPSF female, with dual flow control valve	0.39	BL30-2.10.04DA
B	Suction cup BL30-2 Chloroprene, G1/4" male, with mesh filter	0.43	BL30.2.10.04AB
B	Suction cup BL30-2 Chloroprene, G1/4" male, with dual flow control valve	0.43	BL30-2.10.04DB
B	Suction cup BL30-2 Chloroprene, 1/4" NPT male, with mesh filter	0.43	BL30-2.10.04AC
B	Suction cup BL30-2 Chloroprene, 1/4" NPT male, with dual flow control valve	0.43	BL30-2.10.04DC
C	Suction cup BL30-2 Chloroprene, G3/8" male, with mesh filter	0.53	BL30-2.10.04AD
C	Suction cup BL30-2 Chloroprene, G3/8" male, with dual flow control valve	0.53	BL30-2.10.04DD
C	Suction cup BL30-2 Chloroprene, 3/8" NPT male, with mesh filter	0.53	BL30-2.10.04AE
C	Suction cup BL30-2 Chloroprene, 3/8" NPT male, with dual flow control valve	0.53	BL30-2.10.04DE
D	Suction cup BL30-2 Chloroprene, 5x1/8"NPSF female	0.89	BL30-2.10.04AF
D	Suction cup BL30-2 Chloroprene, 5x1/8"NPSF female, with dual flow control valve	0.89	BL30-2.10.04DF
E	Suction cup BL30-2 Chloroprene, 1/8"NPSF female, PA	0.26	BL30-2.10.04AH
A	Suction cup BL30-2 Silicone, 1/8"NPSF female	0.39	BL30-2.20.04AA
A	Suction cup BL30-2 Silicone, 1/8"NPSF female, with mesh filter	0.39	BL30-2.20.04AG
A	Suction cup BL30-2 Silicone, 1/8"NPSF female, with dual flow control valve	0.39	BL30-2.20.04DA
B	Suction cup BL30-2 Silicone, G1/4" male, with mesh filter	0.43	BL30-2.20.04AB
B	Suction cup BL30-2 Silicone, G1/4" male, with dual flow control valve	0.43	BL30-2.20.04DB
B	Suction cup BL30-2 Silicone, 1/4" NPT male, with mesh filter	0.43	BL30-2.20.04AC
B	Suction cup BL30-2 Silicone, 1/4" NPT male, with dual flow control valve	0.43	BL30-2.20.04DC
C	Suction cup BL30-2 Silicone, G3/8" male, with mesh filter	0.53	BL30-2.20.04AD
C	Suction cup BL30-2 Silicone, G3/8" male, with dual flow control valve	0.53	BL30-2.20.04DD
C	Suction cup BL30-2 Silicone, 3/8" NPT male, with mesh filter	0.53	BL30-2.20.04AE

	Suction cups with fitting	Weight (oz)	Part No.
C	Suction cup BL30-2 Silicone, 3/8" NPT male, with dual flow control valve	0.53	BL30-2.20.04DE
D	Suction cup BL30-2 Silicone, 5x1/8"NPSF female	0.89	BL30-2.20.04AF
D	Suction cup BL30-2 Silicone, 5x1/8"NPSF female, with dual flow control valve	0.89	BL30-2.20.04DF
E	Suction cup BL30-2 Silicone, 1/8"NPSF female, PA	0.26	BL30-2.20.04AH

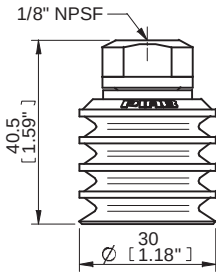

A

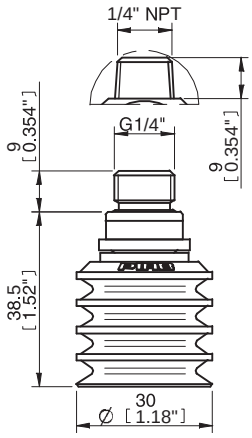

B

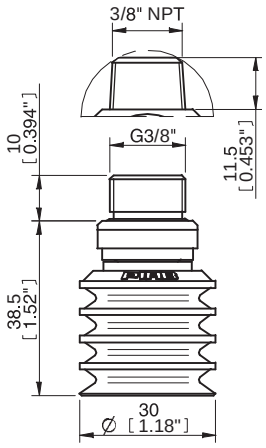

C

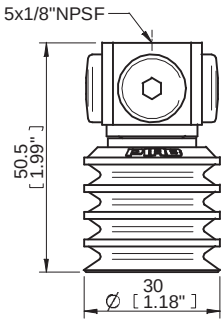

D

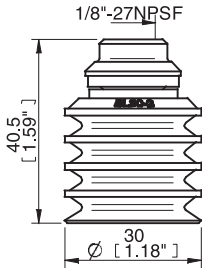

E

Rubber parts	Part No.
Suction cup BL30-2 Chloroprene	BL30-2.10
Suction cup BL30-2 Silicone	BL30-2.20

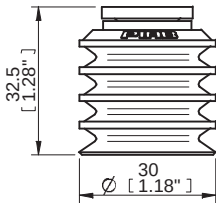

Fittings	Part No.
Fitting 1/8"NPSF female	04AA
Fitting 1/8"NPSF female, with mesh filter	04AG
Fitting 1/8"NPSF female, with dual flow control valve	04DA
Fitting G1/4" male, with mesh filter	04AB
Fitting G1/4" male, with dual flow control valve	04DB
Fitting 1/4" NPT male, with mesh filter	04AC
Fitting 1/4" NPT male, with dual flow control valve	04DC
Fitting G3/8" male, with mesh filter	04AD
Fitting G3/8" male, with dual flow control valve	04DD
Fitting 3/8" NPT male, with mesh filter	04AE
Fitting 3/8" NPT male, with dual flow control valve	04DE
Fitting 5x1/8"NPSF female	04AF
Fitting 5x1/8"NPSF female, with dual flow control valve	04DF
Fitting 1/8"NPSF female, PA	04AH

Spare part	Material	Temperature range, °F	Part No.
Reinforcement ring for BL30-2, 4x	Polyamide, PA	-40–230	31.50.072

BL40-2 AND B-BL40-2

SUCTION CUP WITH LONG BELLOWS

- Suitable for level adjustment.
- Lifting movement to separate small and thin objects.
- Less suitable when the lifting force is parallel to the surface of the object.
- B-BL40-2: Suction cup without fitting, specially designed for the food industry (bakery).
- Optional reinforcement rings made of polyamide.

LIFTING FORCES & TECHNICAL DATA

Outer Dia	Lifting force vertical to the surface, lbf, at vacuum level			Lifting force parallel to the surface, lbf at vacuum level			Volume	Min. curve radius	Max. vertical movement	Weight rubber part
in	6 -inHg	18 -inHg	27 -inHg	6 -inHg	18 -inHg	27 -inHg	in³	in	in	oz
1.57	0.25/2.50*	0.49/4.90*	—	—	—	—	1.65	0.43	1.30	0.35

Lifting force with reinforcement rings.

MATERIAL SPECIFICATIONS

Material	Color	Hardness, °Shore A	Temperature range, °F
Chloroprene, CR	Black	60	-40–230
Silicone, SIL	Red	50	-40–392
Silicone, SIL	White	30	-40–392

MATERIAL RESISTANCE

Material	Wear resistance	Oil	Weather & ozone	Hydrolysis	Gasoline	Concentrated acids	Alcohol	Oxidation
Chloroprene, CR	Excellent	Fair	Good	Good	Fair	Poor	Good	Good
Silicone, SIL	Good	Poor	Excellent	Fair	Poor	Poor	Good	Excellent

ORDERING INFORMATION

	Suction cups with fitting	Weight (oz)	Part No.
A	Suction cup BL40-2 Chloroprene, 1/8"NPSF female	0.56	BL40-2.10.04AA
A	Suction cup BL40-2 Chloroprene, 1/8"NPSF female, with mesh filter	0.56	BL40-2.10.04AG
A	Suction cup BL40-2 Chloroprene, 1/8"NPSF female, with dual flow control valve	0.56	BL40-2.10.04DA
B	Suction cup BL40-2 Chloroprene, G1/4" male, with mesh filter	0.60	BL40-2.10.04AB
B	Suction cup BL40-2 Chloroprene, G1/4" male, with dual flow control valve	0.60	BL40-2.10.04DB
B	Suction cup BL40-2 Chloroprene, 1/4" NPT male, with mesh filter	0.60	BL40-2.10.04AC
B	Suction cup BL40-2 Chloroprene, 1/4" NPT male, with dual flow control valve	0.60	BL40-2.10.04DC
C	Suction cup BL40-2 Chloroprene, G3/8" male, with mesh filter	0.70	BL40-2.10.04AD
C	Suction cup BL40-2 Chloroprene, G3/8" male, with dual flow control valve	0.70	BL40-2.10.04DD
C	Suction cup BL40-2 Chloroprene, 3/8" NPT male, with mesh filter	0.70	BL40-2.10.04AE
C	Suction cup BL40-2 Chloroprene, 3/8" NPT male, with dual flow control valve	0.70	BL40-2.10.04DE
D	Suction cup BL40-2 Chloroprene, 5x1/8"NPSF female	1.06	BL40-2.10.04AF
D	Suction cup BL40-2 Chloroprene, 5x1/8"NPSF female, with dual flow control valve	1.06	BL40-2.10.04DF
E	Suction cup BL40-2 Chloroprene, 1/8"NPSF female, PA	0.43	BL40-2.10.04AH
A	Suction cup BL40-2 Silicone, 1/8"NPSF female	0.56	BL40-2.20.04AA
A	Suction cup BL40-2 Silicone, 1/8"NPSF female, with mesh filter	0.56	BL40-2.20.04AG
A	Suction cup BL40-2 Silicone, 1/8"NPSF female, with dual flow control valve	0.56	BL40-2.20.04DA
B	Suction cup BL40-2 Silicone, G1/4" male, with mesh filter	0.60	BL40-2.20.04AB
B	Suction cup BL40-2 Silicone, G1/4" male, with dual flow control valve	0.60	BL40-2.20.04DB
B	Suction cup BL40-2 Silicone, 1/4" NPT male, with mesh filter	0.60	BL40-2.20.04AC
B	Suction cup BL40-2 Silicone, 1/4" NPT male, with dual flow control valve	0.60	BL40-2.20.04DC
C	Suction cup BL40-2 Silicone, G3/8" male, with mesh filter	0.70	BL40-2.20-04AD
C	Suction cup BL40-2 Silicone, G3/8" male, with dual flow control valve	0.70	BL40-2.20.04DD
C	Suction cup BL40-2 Silicone, 3/8" NPT male, with mesh filter	0.70	BL40-2.20.04AE
C	Suction cup BL40-2 Silicone, 3/8" NPT male, with dual flow control valve	0.70	BL40-2.20.04DE
D	Suction cup BL40-2 Silicone, 5x1/8"NPSF female	1.06	BL40-2.20.04AF
D	Suction cup BL40-2 Silicone, 5x1/8"NPSF female, with dual flow control valve	1.06	BL40-2.20.04DF
E	Suction cup BL40-2 Silicone, 1/8"NPSF female, PA	0.43	BL40-2.20.04AH

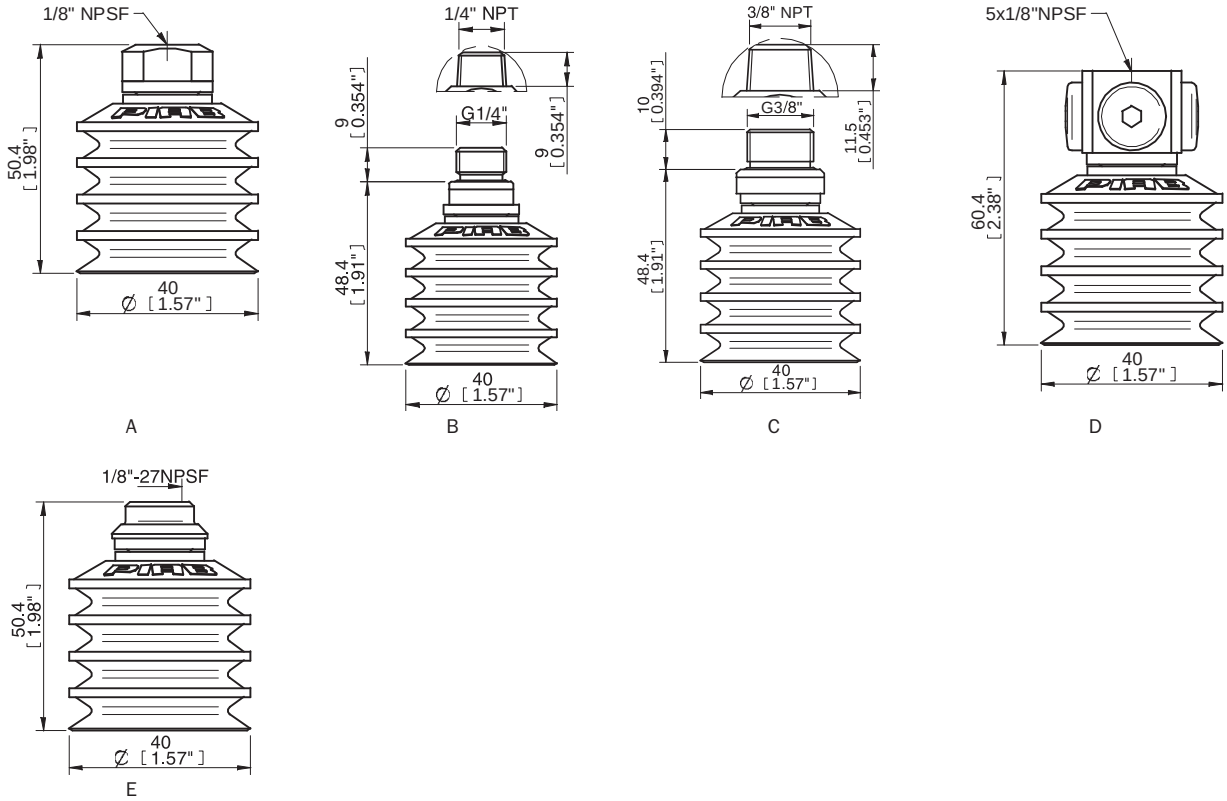

	Rubber parts	Part No.
A	Suction cup BL40-2 Chloroprene	BL40-2.10
A	Suction cup BL40-2 Silicone	BL40-2.20
B	Suction cup B-BL40-2 Silicone	B-BL40-2.20

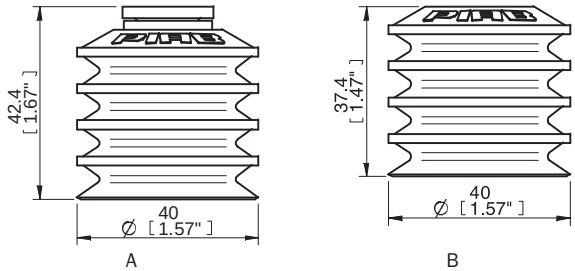

Fittings	Part No.
Fitting 1/8"NPSF female	04AA
Fitting 1/8"NPSF female, with mesh filter	04AG
Fitting 1/8"NPSF female, with dual flow control valve	04DA
Fitting G1/4" male, with mesh filter	04AB
Fitting G1/4" male, with dual flow control valve	04DB
Fitting 1/4" NPT male, with mesh filter	04AC
Fitting 1/4" NPT male, with dual flow control valve	04DC
Fitting G3/8" male, with mesh filter	04AD
Fitting G3/8" male, with dual flow control valve	04DD
Fitting 3/8" NPT male, with mesh filter	04AE
Fitting 3/8" NPT male, with dual flow control valve	04DE
Fitting 5x1/8"NPSF female	04AF
Fitting 5x1/8"NPSF female, with dual flow control valve	04DF
Fitting 1/8"NPSF female, PA	04AH

Spare part	Material	Temperature range, °F	Part No.
Reinforcement ring for BL40-2 & B-BL40-2, 4x	Polyamide, PA	-40–230	31.50.073

BL50-2

SUCTION CUP WITH LONG BELLOWS

- Suitable for level adjustment.
- Lifting movement to separate small and thin objects.
- Less suitable when the lifting force is parallel to the surface of the object.
- Optional reinforcement rings made of polyamide.

LIFTING FORCES & TECHNICAL DATA

Outer Dia	Lifting force vertical to the surface, lbf, at vacuum level			Lifting force parallel to the surface, lbf, at vacuum level			Volume	Min. curve radius	Max. vertical movement	Weight rubber part
in	6 -inHg	18 -inHg	27 -inHg	6 -inHg	18 -inHg	27 -inHg	in³	in	in	oz
1.89	0.38/3.80*	0.97/9.70*	—	—	—	—	3.23	0.51	1.34	0.71

Lifting force with reinforcement rings.

MATERIAL SPECIFICATIONS

Material	Color	Hardness, °Shore A	Temperature range, °F
Chloroprene, CR	Black	60	-40–230
Silicone, SIL	Red	50	-40–392

MATERIAL RESISTANCE

Material	Wear resistance	Oil	Weather & ozone	Hydrolysis	Gasoline	Concentrated acids	Alcohol	Oxidation
Chloroprene, CR	Excellent	Fair	Good	Good	Fair	Poor	Good	Good
Silicone, SIL	Good	Poor	Excellent	Fair	Poor	Poor	Good	Excellent

ORDERING INFORMATION

	Suction cups with fitting	Weight (oz)	Part No.
A	Suction cup BL50-2 Chloroprene, 1/8"NPSF female	1.06	BL50-2.10.05AA
A	Suction cup BL50-2 Chloroprene, 1/8"NPSF female, with mesh filter	1.06	BL50-2.10.05AG
A	Suction cup BL50-2 Chloroprene, 1/8"NPSF female, with dual flow control valve	1.06	BL50-2.10.05DA
B	Suction cup BL50-2 Chloroprene, G1/4" male, with mesh filter	1.06	BL50-2.10.05AB
B	Suction cup BL50-2 Chloroprene, G1/4" male, with mesh filter and dual flow control valve	1.06	BL50-2.10.05DB
B	Suction cup BL50-2 Chloroprene, 1/4" NPT male, with mesh filter	1.06	BL50-2.10.05AC
B	Suction cup BL50-2 Chloroprene, 1/4" NPT male, with dual flow control valve	1.06	BL50-2.10.05DC
C	Suction cup BL50-2 Chloroprene, G3/8" male, with mesh filter	1.06	BL50-2.10.05AD
C	Suction cup BL50-2 Chloroprene, G3/8" male, with mesh filter and dual flow control valve	1.06	BL50-2.10.05DD
C	Suction cup BL50-2 Chloroprene, 3/8" NPT male, with mesh filter	1.06	BL50-2.10.05AE
C	Suction cup BL50-2 Chloroprene, 3/8" NPT male, with dual flow control valve	1.06	BL50-2.10.05DE
D	Suction cup BL50-2 Chloroprene, 5x1/8"NPSF female	1.77	BL50-2.10.05AF
D	Suction cup BL50-2 Chloroprene, 5x1/8"NPSF female, with dual flow control valve	1.77	BL50-2.10.05DF
E	Suction cup BL50-2 Chloroprene, 1/8"NPSF female, PA	0.91	BL50-2.10.05CA
A	Suction cup BL50-2 Silicone, 1/8"NPSF female	1.06	BL50-2.20.05AA
A	Suction cup BL50-2 Silicone, 1/8"NPSF female, with mesh filter	1.06	BL50-2.20.05AG
A	Suction cup BL50-2 Silicone, 1/8"NPSF female, with dual flow control valve	1.06	BL50-2.20.05DA
B	Suction cup BL50-2 Silicone, G1/4" male, with mesh filter	1.06	BL50-2.20.05AB
B	Suction cup BL50-2 Silicone, G1/4" male, with mesh filter and dual flow control valve	1.06	BL50-2.20.05DB
B	Suction cup BL50-2 Silicone, 1/4" NPT male, with mesh filter	1.06	BL50-2.20.05AC
B	Suction cup BL50-2 Silicone, 1/4" NPT male, with dual flow control valve	1.06	BL50-2.20.05DC
C	Suction cup BL50-2 Silicone, G3/8" male, with mesh filter	1.06	BL50-2.20.05AD
C	Suction cup BL50-2 Silicone, G3/8" male, with mesh filter and dual flow control valve	1.06	BL50-2.20.05DD
C	Suction cup BL50-2 Silicone, 3/8" NPT male, with mesh filter	1.06	BL50-2.20.05AE
C	Suction cup BL50-2 Silicone, 3/8" NPT male, with dual flow control valve	1.06	BL50-2.20.05DE
D	Suction cup BL50-2 Silicone, 5x1/8"NPSF female	1.77	BL50-2.20.05AF
D	Suction cup BL50-2 Silicone, 5x1/8"NPSF female, with dual flow control valve	1.77	BL50-2.20.05DF
E	Suction cup BL50-2 Silicone, 1/8"NPSF female, PA	0.91	BL50-2.20.05CA

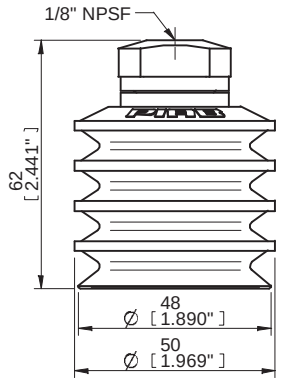

A

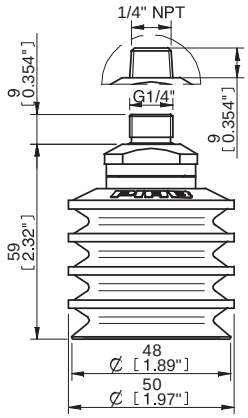

B

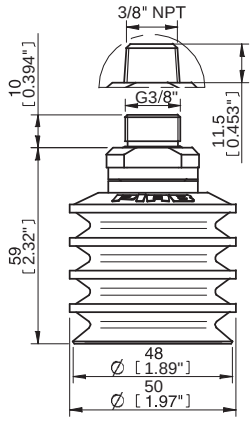

C

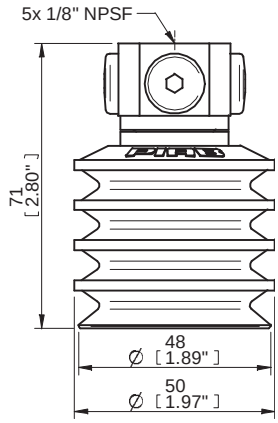

D

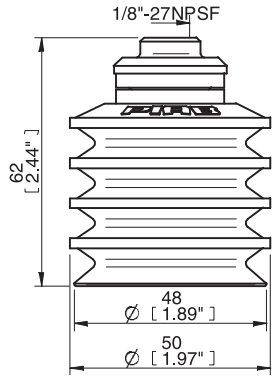

E

Rubber parts	Part No.
Suction cup BL50-2 Chloroprene	BL50-2.10
Suction cup BL50-2 Silicone	BL50-2.20

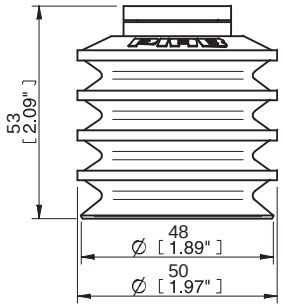

Fittings	Part No.
Fitting 1/8"NPSF female	05AA
Fitting 1/8"NPSF female, with mesh filter	05AG
Fitting 1/8"NPSF female, with dual flow control valve	05DA
Fitting G1/4" male, with mesh filter	05AB
Fitting G1/4" male, with dual flow control valve	05DB
Fitting 1/4" NPT male, with mesh filter	05AC
Fitting 1/4" NPT male, with dual flow control valve	05DC
Fitting G3/8" male, with mesh filter	05AD
Fitting G3/8" male, with mesh filter and dual flow control valve	05DD
Fitting 3/8" NPT male, with mesh filter	05AE
Fitting 3/8" NPT male, with dual flow control valve	05DE
Fitting 5x1/8"NPSF female	05AF
Fitting 5x1/8"NPSF female, with dual flow control valve	05DF
Fitting 1/8"NPSF female, PA	05CA

Spare part	Material	Temperature range, °F	Part No.
Reinforcement ring for BL50-2, 4x	Polyamide, PA	-40–230	31.50.074

BL40-4

SUCTION CUP WITH LONG BELLOWS AND LONG LIP

- High initial flow, long and stable bellow & long and thin lip.
- Suitable for level adjustment.
- Lifting movement to separate small and thin objects.
- Less suitable when the lifting force is parallel to the surface of the object.
- Wide temperature range, -76°F – 392°F.

LIFTING FORCES & TECHNICAL DATA

Outer Dia	Lifting force vertical to the surface, lbf, at vacuum level			Lifting force parallel to the surface, lbf, at vacuum level			Volume	Min. curve radius	Max. vertical movement	Weight rubber part
in	6 -inHg	18 -inHg	27 -inHg	6 -inHg	18 -inHg	27 -inHg	in^3	in	in	oz
1.58	2.25	3.37	4.95	2.02*	3.60*	5.85*	0.92	0.59	0.71	0.28

**The suction cup is not intended for handling shear lifts. The values are given as a dimensioning guide to be used when, e.g., the acceleration/ retardation causes shear forces.*

MATERIAL SPECIFICATIONS

Material	Color	Hardness °Shore A	Temperature range °F
Silicone, SIL	Red	40	-40-392

MATERIAL RESISTANCE

Material	Wear resistance	Oil	Weather & Ozone	Hydrolysis	Gasoline	Concentrated acids	Alcohol	Oxidation
Silicone, SIL	Good	Poor	Excellent	Fair	Poor	Poor	Good	Excellent

ORDERING INFORMATION

	Suction cups with fitting	Weight (oz)	Part No.
A	Suction cup BL40-4 Silicone, G3/8" male	0.70	BL40-4.20.04AJ
B	Suction cup BL40-4 Silicone, 3/8" NPT male	0.70	BL40-4.20.04AL

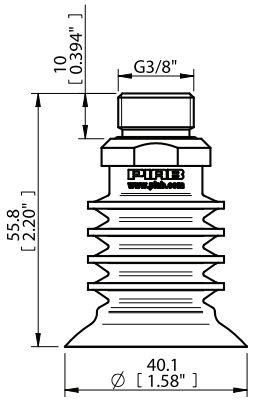

A

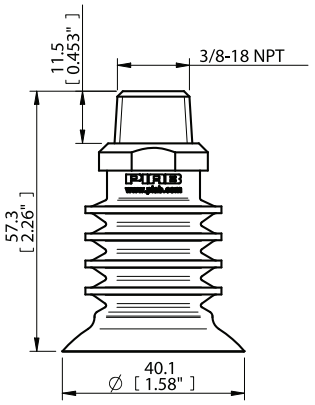

B

Rubber parts	Part No.
Suction cup BL40-4 Silicone	BL40-4.20

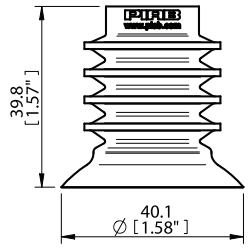

Fittings	Part No.
Fitting G3/8" male	04AJ
Fitting 3/8" NPT male	04AL

BL30-3P

SUCTION CUP SPECIALLY DESIGNED FOR PLASTIC BAG HANDLING

- High-flow fitting allowing high initial vacuum flow needed for plastic bag handling.
- Suitable for level adjustment and uneven surfaces.
- Dual hardness allowing strength and stability in conjunction with softness and flexibility.
- DURAFLEX® material features the elasticity of rubber in combination with the wear resistance of polyurethane.
- The DURAFLEX® material is mark-free.

LIFTING FORCES & TECHNICAL DATA

Outer Dia	Lifting force vertical to the surface, lbf, at vacuum level			Lifting force parallel to the surface, lbf, at vacuum level			Volume	Min. curve radius	Max. vertical movement	Weight rubber part
in	6 -inHg	18 -inHg	27 -inHg	6 -inHg	18 -inHg	27 -inHg	in³	in	in	oz
1.18	2.25	4.95	6.29	2.02*	2.25*	3.60*	0.85	0.24	0.55	0.21

**The suction cup is not intended for handling shear lifts. The values are given as a dimensioning guide to be used when, e.g., the acceleration/ retardation causes shear forces.*

MATERIAL SPECIFICATIONS

Material	Color	Hardness, °Shore A	Temperature range, °F
Polyurethane, PU30	Yellow	30	50-122
Polyurethane, PU70	Black	70	50-122

MATERIAL RESISTANCE

Wear resistance	Oil	Weather & ozone	Hydrolysis	Gasoline	Concentrated acids	Ethanol	Methanol	Oxidation
Excellent	Excellent	Excellent	Fair	Fair	Fair	Fair	Poor	Poor

ORDERING INFORMATION

	Suction cups with fitting	Weight (oz)	Part No.
A	Suction cup BL30-3P Polyurethane 30/70, G3/8" male	0.63	BL30-3P.4L.04AJ
B	Suction cup BL30-3P Polyurethane 30/70, 3/8" NPT male	0.63	BL30-3P.4L.04AL

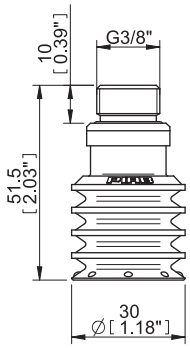

A

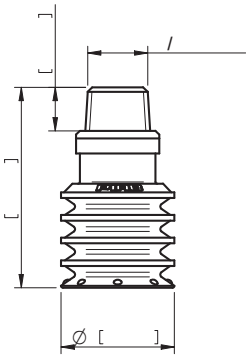

B

Rubber part	Part No.
Suction cup BL30-3P Polyurethane 30/70	BL30-3P.4L

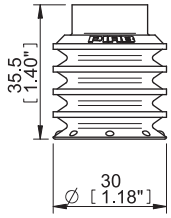

Fittings	Part No.
Fitting G3/8" male	04AJ
Fitting 3/8" NPT male	04AL

BL40-3P

SUCTION CUP SPECIALLY DESIGNED FOR PLASTIC BAG HANDLING

- High-flow fitting allowing high initial vacuum flow needed for plastic bag handling.
- Suitable for level adjustment and uneven surfaces.
- Dual hardness allowing strength and stability in conjunction with softness and flexibility.
- DURAFLEX® material features the elasticity of rubber in combination with the wear resistance of polyurethane.
- The DURAFLEX® material is mark-free.

LIFTING FORCES & TECHNICAL DATA

Outer Dia	Lifting force vertical to the surface, lbf, at vacuum level			Lifting force parallel to the surface, lbf, at vacuum level			Volume	Min. curve radius	Max. vertical movement	Weight rubber part
in	6 -inHg	18 -inHg	27 -inHg	6 -inHg	18 -inHg	27 -inHg	in³	in	in	oz
1.57	4.50	9.67	12.4	2.92*	5.40*	8.09*	1.65	0.51	0.83	0.42

**The suction cup is not intended for handling shear lifts. The values are given as a dimensioning guide to be used when, e.g., the acceleration/ retardation causes shear forces.*

MATERIAL SPECIFICATIONS

Material	Color	Hardness, °Shore A	Temperature range, °F
Polyurethane, PU30	Yellow	30	50-122
Polyurethane, PU70	Black	70	50-122

MATERIAL RESISTANCE

Wear resistance	Oil	Weather & ozone	Hydrolysis	Gasoline	Concentrated acids	Ethanol	Methanol	Oxidation
Excellent	Excellent	Excellent	Fair	Fair	Fair	Fair	Poor	Poor

ORDERING INFORMATION

	Suction cups with fitting	Weight (oz)	Part No.
A	Suction cup BL40-3P Polyurethane 30/70, G3/8" male	0.84	BL40-3P.4L.04AJ
B	Suction cup BL40-3P Polyurethane 30/70, 3/8" NPT male	0.84	BL40-3P.4L.04AL

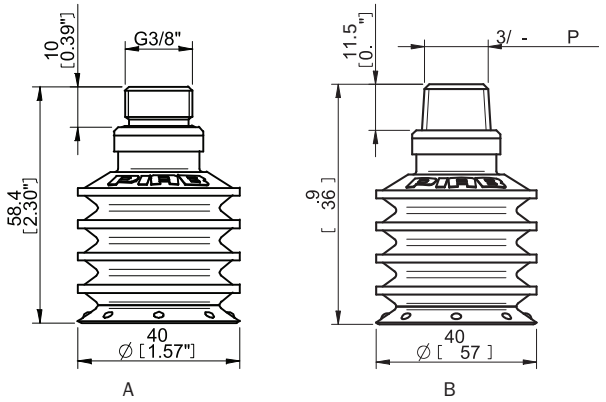

Rubber part	Part No.
Suction cup BL40-3P Polyurethane 30/70	BL40-3P.4L

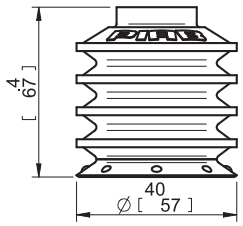

Fittings	Part No.
Fitting G3/8" male	04AJ
Fitting 3/8" NPT male	04AL

BL50-3P

SUCTION CUP SPECIALLY DESIGNED FOR PLASTIC BAG HANDLING

- High-flow fitting allowing high initial vacuum flow needed for plastic bag handling.
- Suitable for level adjustment and uneven surfaces.
- Dual hardness allowing strength and stability in conjunction with softness and flexibility.
- DURAFLEX® material features the elasticity of rubber in combination with the wear resistance of polyurethane.
- The DURAFLEX® material is mark-free.

LIFTING FORCES & TECHNICAL DATA

Outer Dia	Lifting force vertical to the surface, lbf, at vacuum level			Lifting force parallel to the surface, lbf, at vacuum level			Volume	Min. curve radius	Max. vertical movement	Weight rubber part
in	6 -inHg	18 -inHg	27 -inHg	6 -inHg	18 -inHg	27 -inHg	in³	in	in	oz
1.97	5.40	13.5	16.9	4.95*	11.0*	13.5*	3.30	0.63	1.02	0.85

**The suction cup is not intended for handling shear lifts. The values are given as a dimensioning guide to be used when, e.g., the acceleration/ retardation causes shear forces.*

MATERIAL SPECIFICATIONS

Material	Color	Hardness, °Shore A	Temperature range, °F
Polyurethane, PU30	Yellow	30	50-122
Polyurethane, PU70	Black	70	50-122

MATERIAL RESISTANCE

Wear resistance	Oil	Weather & ozone	Hydrolysis	Gasoline	Concentrated acids	Ethanol	Methanol	Oxidation
Excellent	Excellent	Excellent	Fair	Fair	Fair	Fair	Poor	Poor

ORDERING INFORMATION

	Suction cups with fitting	Weight (oz)	Part No.
A	Suction cup BL50-3P Polyurethane 30/70, G1/2" male	1.34	BL50-3P.4L.05AJ
B	Suction cup BL50-3P Polyurethane 30/70, 1/2" NPT male	1.34	BL50-3P.4L.05AL

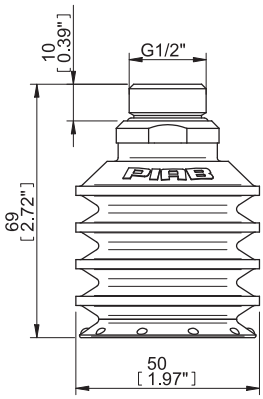

A

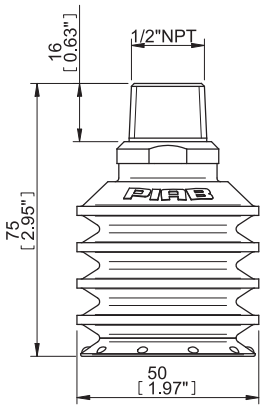

B

Rubber part	Part No.
Suction cup BL50-3P Polyurethane 30/70	BL50-3P.4L

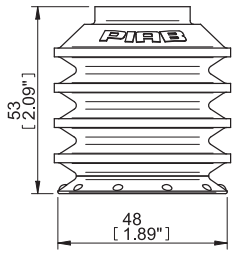

Fittings	Part No.
Fitting G1/2" male	05AJ
Fitting 1/2" NPT male	05AL

BX25P

SUCTION CUP WITH 2½ BELLOWS

- Suitable for level adjustment and for uneven and porous surfaces such as cardboard, etc.
- Dual hardness allowing strength and stability in conjunction with softness and flexibility.
- DURAFLEX® material features the elasticity of rubber in combination with the wear resistance of polyurethane.
- The DURAFLEX® material is mark-free.
- Filter disk made of polyester PES4/14 and TPE.

LIFTING FORCES & TECHNICAL DATA

Material	Outer Dia	Lifting force vertical to the surface, lbf, at vacuum level			Lifting force parallel to the surface, lbf, at vacuum level			Volume	Min. curve radius	Max. vertical movement	Weight rubber part
	in	6 -inHg	18 -inHg	27 -inHg	6 -inHg	18 -inHg	27 -inHg	in³	in	in	oz
PU30°/60°	1.02	1.80	2.92	4.05	1.12*	2.25*	2.70*	0.18	0.31	0.33	0.11
PU60°	1.02	2.02	3.15	4.05	1.57*	2.47*	3.37*	0.18	0.31	0.33	0.11

**The suction cup is not intended for handling shear lifts. The values are given as a dimensioning guide to be used when, e.g., the acceleration/ retardation causes shear forces.*

MATERIAL SPECIFICATIONS

Material	Color	Hardness °Shore A	Temperature range °F
Polyurethane, PU30/PU60	Yellow/Green transparent	30/60	50–122
Polyurethane, PU60	Green transparent	60	50–122

MATERIAL RESISTANCE

Wear resistance	Oil	Weather & ozone	Hydrolysis	Gasoline	Concentrated acids	Ethanol	Methanol	Oxidation
Excellent	Excellent	Excellent	Fair	Fair	Fair	Fair	Poor	Poor

ORDERING INFORMATION

	Suction cups with fitting	Weight (oz)	Part No.
A	Suction cup BX25P Polyurethane 30/60 with filter, M5 female	0.22	BX25P.4K.02AA.F
A	Suction cup BX25P Polyurethane 30/60 with filter, M5 female, with dual flow control valve	0.22	BX25P.4K.02DA.F
B	Suction cup BX25P Polyurethane 30/60, G1/8" male, with mesh filter	0.22	BX25P.4K.02AB.F
B	Suction cup BX25P Polyurethane 30/60, G1/8" male, with dual flow control valve	0.22	BX25P.4K.02DB.F
B	Suction cup BX25P Polyurethane 30/60, 1/8" NPT male, with mesh filter	0.22	BX25P.4K.02AC.F
B	Suction cup BX25P Polyurethane 30/60, 1/8" NPT male, with dual flow control valve	0.22	BX25P.4K.02DC.F
C	Suction cup BX25P Polyurethane 30/60 with filter, G1/8" male / M5 female	0.18	BX25P.4K.02AD.F
C	Suction cup BX25P Polyurethane 30/60, G1/8" male / M5 female, with mesh filter	0.18	BX25P.4K.02AF.F
C	Suction cup BX25P Polyurethane 30/60 with filter, G1/8" male / M5 female, with dual flow control valve	0.18	BX25P.4K.02DD.F
D	Suction cup BX25P Polyurethane 30/60 with filter, 5xM5 female	0.46	BX25P.4K.02AE.F
D	Suction cup BX25P Polyurethane 30/60 with filter, 5xM5 female, with dual flow control valve	0.46	BX25P.4K.02DE.F
A	Suction cup BX25P Polyurethane 60 with filter, M5 female	0.22	BX25P.4E.02AA.F
A	Suction cup BX25P Polyurethane 60 with filter, M5 female, with dual flow control valve	0.22	BX25P.4E.02DA.F
B	Suction cup BX25P Polyurethane 60, G1/8" male, with mesh filter	0.22	BX25P.4E.02AB.F
B	Suction cup BX25P Polyurethane 60, G1/8" male, with dual flow control valve	0.22	BX25P.4E.02DB.F
B	Suction cup BX25P Polyurethane 60, 1/8" NPT male, with mesh filter	0.22	BX25P.4E.02AC.F
B	Suction cup BX25P Polyurethane 60, 1/8" NPT male, with dual flow control valve	0.22	BX25P.4E.02DC.F
C	Suction cup BX25P Polyurethane 60 with filter, G1/8" male / M5 female	0.18	BX25P.4E.02AD.F
C	Suction cup BX25P Polyurethane 60, G1/8" male / M5 female, with mesh filter	0.18	BX25P.4E.02AF.F
C	Suction cup BX25P Polyurethane 60 with filter, G1/8" male / M5 female, with dual flow control valve	0.18	BX25P.4E.02DD.F
D	Suction cup BX25P Polyurethane 60 with filter, 5xM5 female	0.46	BX25P.4E.02AE.F
D	Suction cup BX25P Polyurethane 60 with filter, 5xM5 female, with dual flow control valve	0.46	BX25P.4E.02DE.F

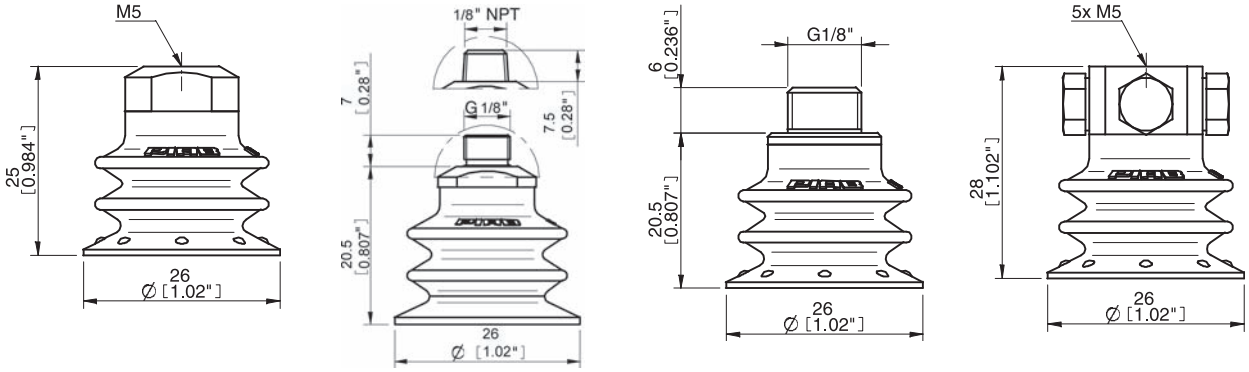

A B C D

Rubber parts	Part No.
Suction cup BX25P Polyurethane 30/60, with filter	BX25P.4K.F
Suction cup BX25P Polyurethane 60, with filter	BX25P.4E.F

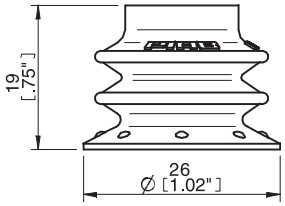

Fittings	Part No.
Fitting M5 female	02AA
Fitting M5 female, with dual flow control valve	02DA
Fitting G1/8" male, with mesh filter	02AB
Fitting G1/8" male, with mesh filter and dual flow control valve	02DB
Fitting 1/8" NPT male, with mesh filter	02AC
Fitting 1/8" NPT male, with dual flow control valve	02DC
Fitting G1/8" male/M5 female	02AD
Fitting G1/8" male/M5 female, with mesh filter	02AF
Fitting G1/8" male/M5 female, with dual flow control valve	02DD
Fitting 5xM5 female	02AE
Fitting 5xM5 female, with dual flow control valve	02DE

Spare part	Material	Temperature range °F	Part No.
Filter for BX25P	Polyester/TPE	-40–194	01.09.311

BX35P

SUCTION CUP WITH 2½ BELLOWS

- Suitable for level adjustment and for uneven and porous surfaces such as cardboard, etc.
- Dual hardness allowing strength and stability in conjunction with softness and flexibility.
- DURAFLEX® material features the elasticity of rubber in combination with the wear resistance of polyurethane.
- The DURAFLEX® material is mark-free.
- Filter disk made of polyester PES4/14 and TPE.

LIFTING FORCES & TECHNICAL DATA

Material	Outer Dia	Lifting force vertical to the surface, lbf, at vacuum level			Lifting force parallel to the surface, lbf, at vacuum level			Volume	Min. curve radius	Max. vertical movement	Weight rubber part
	in	6 -inHg	18 -inHg	27 -inHg	6 -inHg	18 -inHg	27 -inHg	in³	in	in	oz
PU30°/60°	1.46	2.70	4.50	6.29	2.70*	4.50*	6.29*	0.61	0.39	0.55	0.28
PU60°	1.46	3.37	5.62	6.74	4.95*	6.74*	8.09*	0.61	0.39	0.55	0.28

**The suction cup is not intended for handling shear lifts. The values are given as a dimensioning guide to be used when, e.g., the acceleration/ retardation causes shear forces.*

MATERIAL SPECIFICATIONS

Material	Color	Hardness °Shore A	Temperature range °F
Polyurethane, PU30/PU60	Yellow/Green transparent	30/60	50–122
Polyurethane, PU60	Green transparent	60	50–122

MATERIAL RESISTANCE

Wear resistance	Oil	Weather & ozone	Hydrolysis	Gasoline	Concentrated acids	Ethanol	Methanol	Oxidation
Excellent	Excellent	Excellent	Fair	Fair	Fair	Fair	Poor	Poor

ORDERING INFORMATION

	Suction cups with fitting	Weight (oz)	Part No.
A	Suction cup BX35P Polyurethane 30/60 with filter, 1/8"NPSF female	0.49	BX35P.4K.04AA.F
A	Suction cup BX35P Polyurethane 30/60, 1/8"NPSF female, with mesh filter	0.49	BX35P.4K.04AG.F
A	Suction cup BX35P Polyurethane 30/60 with filter, 1/8"NPSF female, with dual flow control valve	0.49	BX35P.4K.04DA.F
B	Suction cup BX35P Polyurethane 30/60, G1/4" male, with mesh filter	0.53	BX35P.4K.04AB.F
B	Suction cup BX35P Polyurethane 30/60, G1/4" male, with dual flow control valve	0.53	BX35P.4K.04DB.F
B	Suction cup BX35P Polyurethane 30/60, 1/4" NPT male, with mesh filter	0.53	BX35P.4K.04AC.F
B	Suction cup BX35P Polyurethane 30/60, 1/4" NPT male, with dual flow control valve	0.53	BX35P.4K.04DC.F
C	Suction cup BX35P Polyurethane 30/60, G3/8" male, with mesh filter	0.63	BX35P.4K.04AD.F
C	Suction cup BX35P Polyurethane 30/60 with filter, G3/8" male, with mesh filter and dual flow control valve	0.63	BX35P.4K.04DD.F
C	Suction cup BX35P Polyurethane 30/60, 3/8" NPT male, with mesh filter	0.63	BX35P.4K.04AE.F
C	Suction cup BX35P Polyurethane 30/60, 3/8" NPT male, with dual flow control valve	0.63	BX35P.4K.04DE.F
D	Suction cup BX35P Polyurethane 30/60, 5x1/8"NPSF female	0.99	BX35P.4K.04AF.F
D	Suction cup BX35P Polyurethane 30/60, 5x1/8"NPSF female, with dual flow control valve	0.99	BX35P.4K.04DF.F
A	Suction cup BX35P Polyurethane 60 with filter, 1/8"NPSF female	0.49	BX35P.4E.04AA.F
A	Suction cup BX35P Polyurethane 60, 1/8"NPSF female. with mesh filter	0.49	BX35P.4E.04AG.F
A	Suction cup BX35P Polyurethane 60 with filter, 1/8"NPSF female, with dual flow control valve	0.49	BX35P.4E.04DA.F
B	Suction cup BX35P Polyurethane 60, G1/4" male, with mesh filter	0.53	BX35P.4E.04AB.F
B	Suction cup BX35P Polyurethane 60, G1/4" male, with dual flow control valve	0.53	BX35P.4E.04DB.F
B	Suction cup BX35P Polyurethane 60, 1/4" NPT male, with mesh filter	0.53	BX35P.4E.04AC.F
B	Suction cup BX35P Polyurethane 60, 1/4" NPT male, with dual flow control valve	0.53	BX35P.4E.04DC.F
C	Suction cup BX35P Polyurethane 60 with filter, G3/8" male, with mesh filter	0.63	BX35P.4E.04AD.F
C	Suction cup BX35P Polyurethane 60 with filter, G3/8" male, with mesh filter and dual flow control valve	0.63	BX35P.4E.04DD.F
C	Suction cup BX35P Polyurethane 60, 3/8" NPT male, with mesh filter	0.63	BX35P.4E.04AE.F
C	Suction cup BX35P Polyurethane 60, 3/8" NPT male, with dual flow control valve	0.63	BX35P.4E.04DE.F
D	Suction cup BX35P Polyurethane 60, 5x1/8"NPSF female	0.99	BX35P.4E.04AF.F
D	Suction cup BX35P Polyurethane 60, 5x1/8"NPSF female, with dual flow control valve	0.99	BX35P.4E.04DF.F

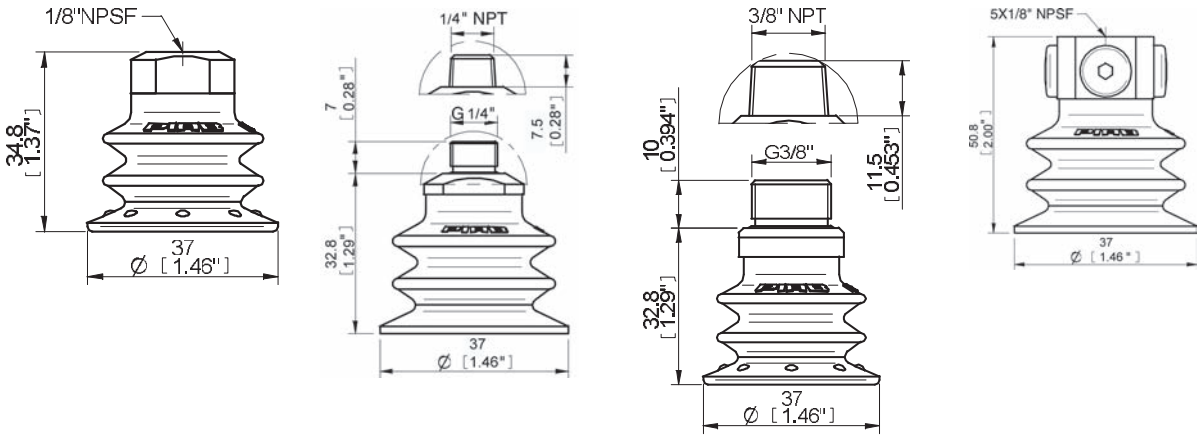

A B C D

Rubber parts	Part No.
Suction cup BX35P Polyurethane 30/60, with filter	BX35P.4K.F
Suction cup BX35P Polyurethane 60, with filter	BX35P.4E.F

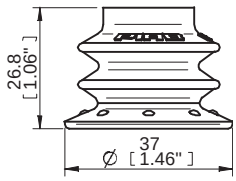

Fittings	Part No.
Fitting 1/8"NPSF female	04AA
Fitting 1/8"NPSF female, with mesh filter	04AG
Fitting 1/8"NPSF female, with dual flow control valve	04DA
Fitting G1/4" male, with mesh filter	04AB
Fitting G1/4" male, with dual flow control valve	04DB
Fitting 1/4" NPT male, with mesh filter	04AC
Fitting 1/4" NPT male, with dual flow control valve	04DC
Fitting G3/8" male, with mesh filter	04AD
Fitting G3/8" male, with dual flow control valve	04DD
Fitting 3/8" NPT male, with mesh filter	04AE
Fitting 3/8" NPT male, with dual flow control valve	04DE
Fitting 5x1/8"NPSF female	04AF
Fitting 5x1/8"NPSF female, with dual flow control valve	04DF

Spare part	Material	Temperature range °F	Part No.
Filter for BX35P	Polyester/TPE	-40–194	01.06.373

BX52P

SUCTION CUP WITH 2½ BELLOWS

- Suitable for level adjustment and for uneven and porous surfaces such as cardboard, etc.
- Dual hardness allowing strength and stability in conjunction with softness and flexibility.
- DURAFLEX® material features the elasticity of rubber in combination with the wear resistance of polyurethane.
- The DURAFLEX® material is mark-free.
- Filter disk made of polyester PES4/14 and TPE.

LIFTING FORCES & TECHNICAL DATA

Material	Outer Dia	Lifting force vertical to the surface, lbf, at vacuum level			Lifting force parallel to the surface, lbf, at vacuum level			Volume	Min. curve radius	Max. vertical movement	Weight rubber part
	in	6 -inHg	18 -inHg	27 -inHg	6 -inHg	18 -inHg	27 -inHg	in³	in	in	oz
PU30°/60°	2.09	7.19	12.6	16.9	6.29*	9.89*	12.1*	1.83	1.26	0.75	0.85
PU60°	2.09	8.32	13.3	18.0	6.07*	11.0*	12.6*	1.83	1.26	0.75	0.85

**The suction cup is not intended for handling shear lifts. The values are given as a dimensioning guide to be used when, e.g., the acceleration/ retardation causes shear forces.*

MATERIAL SPECIFICATIONS

Material	Color	Hardness °Shore A	Temperature range °F
Polyurethane, PU30/PU60	Yellow/Green transparent	30/60	50–122
Polyurethane, PU60	Green transparent	60	50–122

MATERIAL RESISTANCE

Wear resistance	Oil	Weather & ozone	Hydrolysis	Gasoline	Concentrated acids	Ethanol	Methanol	Oxidation
Excellent	Excellent	Excellent	Fair	Fair	Fair	Fair	Poor	Poor

ORDERING INFORMATION

	Suction cups with fitting	Weight (oz)	Part No.
A	Suction cup BX52P Polyurethane 30/60 with filter, 1/8"NPSF female	1.20	BX52P.4K.05AA.F
A	Suction cup BX52P Polyurethane 30/60, 1/8"NPSF female, with mesh filter	1.20	BX52P.4K.05AG.F
A	Suction cup BX52P Polyurethane 30/60 with filter, 1/8"NPSF female, with dual flow control valve	1.20	BX52P.4K.05DA.F
B	Suction cup BX52P Polyurethane 30/60, G1/4" male, with mesh filter	1.20	BX52P.4K.05AB.F
B	Suction cup BX52P Polyurethane 30/60, G1/4" male, with dual flow control valve	1.20	BX52P.4K.05DB.F
B	Suction cup BX52P Polyurethane 30/60, 1/4" NPT male, with mesh filter	1.20	BX52P.4K.05AC.F
B	Suction cup BX52P Polyurethane 30/60, 1/4" NPT male, with dual flow control valve	1.20	BX52P.4K.05DC.F
C	Suction cup BX52P Polyurethane 30/60, G3/8" male, with mesh filter	1.20	BX52P.4K.05AD.F
C	Suction cup BX52P Polyurethane 30/60, G3/8" male, with dual flow control valve	1.20	BX52P.4K.05DD.F
C	Suction cup BX52P Polyurethane 30/60, 3/8" NPT male, with mesh filter	1.20	BX52P.4K.05AE.F
C	Suction cup BX52P Polyurethane 30/60, 3/8" NPT male, with dual flow control valve	1.20	BX52P.4K.05DE.F
D	Suction cup BX52P Polyurethane 30/60 with filter, 5x1/8"NPSF female	1.91	BX52P.4K.05AF.F
D	Suction cup BX52P Polyurethane 30/60 with filter, 5x1/8"NPSF female, with dual flow control valve	1.91	BX52P.4K.05DF.F
A	Suction cup BX52P Polyurethane 60 with filter, 1/8"NPSF female	1.20	BX52P.4E.05AA.F
A	Suction cup BX52P Polyurethane 60, 1/8"NPSF female, with mesh filter	1.20	BX52P.4E.05AG.F
A	Suction cup BX52P Polyurethane 60 with filter, 1/8"NPSF female, with dual flow control valve	1.20	BX52P.4E.05DA.F
B	Suction cup BX52P Polyurethane 60, G1/4" male, with mesh filter	1.20	BX52P.4E.05AB.F
B	Suction cup BX52P Polyurethane 60, G1/4" male, with dual flow control valve	1.20	BX52P.4E.05DB.F
B	Suction cup BX52P Polyurethane 60, 1/4" NPT male, with mesh filter	1.20	BX52P.4E.05AC.F
B	Suction cup BX52P Polyurethane 60, 1/4" NPT male, with dual flow control valve	1.20	BX52P.4E.05DC.F
C	Suction cup BX52P Polyurethane 60, G3/8" male, with mesh filter	1.20	BX52P.4E.05AD.F

	Suction cups with fitting	Weight (oz)	Part No.
C	Suction cup BX52P Polyurethane 60, G3/8" male, with dual flow control valve	1.20	BX52P.4E.05DD.F
C	Suction cup BX52P Polyurethane 60, 3/8" NPT male, with mesh filter	1.20	BX52P.4E.05AE.F
C	Suction cup BX52P Polyurethane 60, 3/8" NPT male, with dual flow control valve	1.20	BX52P.4E.05DE.F
D	Suction cup BX52P Polyurethane 60 with filter, 5x1/8"NPSF female	1.91	BX52P.4E.05AF.F
D	Suction cup BX52P Polyurethane 60 with filter, 5x1/8"NPSF female, with dual flow control valve	1.91	BX52P.4E.05DF.F

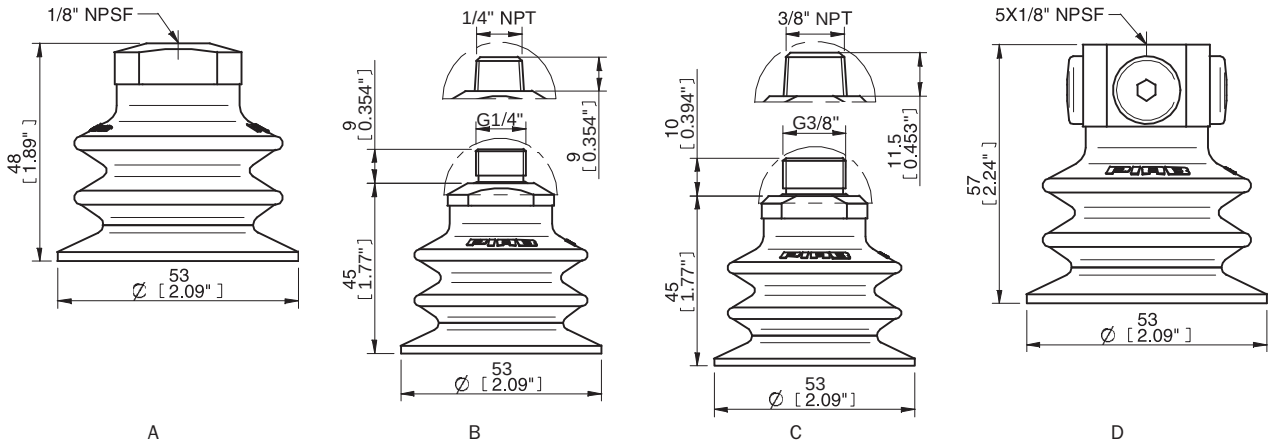

Rubber parts	Part No.
Suction cup BX52P Polyurethane 30/60, with filter	BX52P.4K.F
Suction cup BX52P Polyurethane 60, with filter	BX52P.4E.F

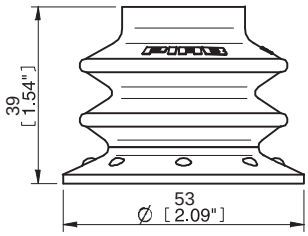

Fittings	Part No.
Fitting 1/8" NPSF female	05AA
Fitting 1/8" NPSF female, with mesh filter	05AG
Fitting 1/8" NPSF female, with dual flow control valve	05DA
Fitting G1/4" male, with mesh filter	05AB
Fitting G1/4" male, with dual flow control valve	05DB
Fitting NPT1/4" male, with mesh filter	05AC
Fitting NPT1/4" male, with dual flow control valve	05DC
Fitting G3/8" male, with mesh filter	05AD
Fitting G3/8" male, with dual flow control valve	05DD
Fitting NPT3/8" male, with mesh filter	05AE
Fitting NPT3/8" male, with dual flow control valve	05DE
Fitting 5x1/8" NPSF female	05AF
Fitting 5x1/8" NPSF female, with dual flow control valve	05DF

Spare part	Material	Temperature range °F	Part No.
Filter for BX52P	Polyester/TPE	-40–194	01.04.726

BX75P

SUCTION CUP WITH 2½ BELLOWS

- Suitable for level adjustment and for uneven and porous surfaces such as cardboard, etc.
- Dual hardness allowing strength and stability in conjunction with softness and flexibility.
- DURAFLEX® material features the elasticity of rubber in combination with the wear resistance of polyurethane.
- The DURAFLEX® material is mark-free.
- Filter disk made of polyester PES4/14 and TPE.

LIFTING FORCES & TECHNICAL DATA

Material	Outer Dia	Lifting force vertical to the surface, lbf, at vacuum level			Lifting force parallel to the surface, lbf, at vacuum level			Volume	Min. curve radius	Max. vertical movement
	in	6 -inHg	18 -inHg	27 -inHg	6 -inHg	18 -inHg	27 -inHg	in³	in	in
PU30°/60°	3.05	13.9	24.7	31.7	8.77*	18.7*	26.1*	4.88	0.91	1.02
PU60°	3.05	18.0	27.0	37.3	17.5*	25.6*	33.7*	4.88	0.91	1.02

**The suction cup is not intended for handling shear lifts. The values are given as a dimensioning guide to be used when, e.g., the acceleration/retardation causes shear forces.*

MATERIAL SPECIFICATIONS

Material	Color	Hardness °Shore A	Temperature range °F
Polyurethane, PU30/PU60	Yellow/Green transparent	30/60	50–122
Polyurethane, PU60	Green transparent	60	50–122

MATERIAL RESISTANCE

Wear resistance	Oil	Weather & ozone	Hydrolysis	Gasoline	Concentrated acids	Ethanol	Methanol	Oxidation
Excellent	Excellent	Excellent	Fair	Fair	Fair	Fair	Poor	Poor

ORDERING INFORMATION

	Suction cups with fitting	Weight (oz)	Part No.
A	Suction cup BX75P Polyurethane 30/60, G3/8" male - 1/8"NPSF female	2.82	BX75P.4K.07UF.F
B	Suction cup BX75P Polyurethane 30/60, thread insert G3/8" male for Vacuum Gripper System (VGS)	2.72	BX75P.5K.G40W.F
B	Suction cup BX75P Polyurethane 60, thread insert G3/8" male for Vacuum Gripper System (VGS)	2.72	BX75P.5E.G40W.F
C	Suction cup BX75P Polyurethane 30/60, brass 3/8"NPSF female	3.74	BX75P.5K.N40W.F
C	Suction cup BX75P Polyurethane 60, brass 3/8"NPSF female	3.74	BX75P.5E.N40W.F

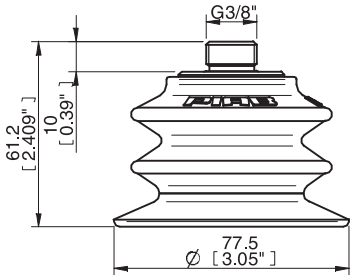

A

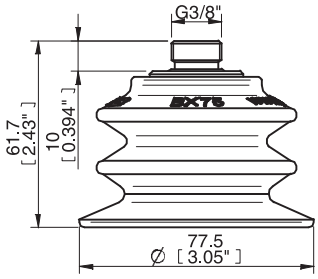

B

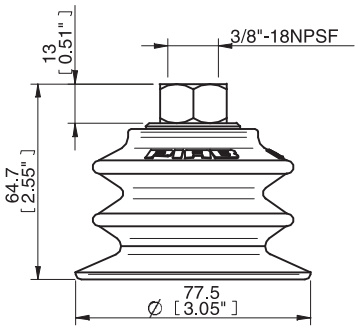

C

Rubber parts	Part No.
Suction cup BX75P Polyurethane 30/60, with filter, for thread insert for Vacuum Gripper System (VGS)	BX75P.5K.F
Suction cup BX75P Polyurethane 60 with filter, for thread insert for Vacuum Gripper System (VGS)	BX75P.5E.F

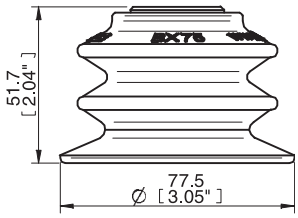

Fittings	Part No.
Thread insert G3/8" male, with O-ring for Vacuum Gripper System (VGS)	01.06.797

Spare part	Material	Temperature range °F	Part No.
Filter for BX75P	Polyester/TPE	-40–194	01.06.374

BX110P

SUCTION CUP WITH 2½ BELLOWS

- Suitable for level adjustment and for uneven and porous surfaces such as cardboard, etc.
- Dual hardness allowing strength and stability in conjunction with softness and flexibility.
- DURAFLEX® material features the elasticity of rubber in combination with the wear resistance of polyurethane.
- The DURAFLEX® material is mark-free.
- Filter disk made of polyester PES4/14 and TPE.

LIFTING FORCES & TECHNICAL DATA

Material	Outer Dia	Lifting force vertical to the surface, lbf, at vacuum level			Lifting force parallel to the surface, lbf, at vacuum level			Volume	Min. curve radius	Max. vertical movement
	in	6 -inHg	18 -inHg	27 -inHg	6 -inHg	18 -inHg	27 -inHg	in³	in	in
PU30°/60°	4.48	35.5	68.8	77.8	18.7*	58.0*	58.5*	14.0	2.17	1.54
PU60°	4.48	40.7	95.8	95.3	35.5*	54.9*	65.9*	14.0	2.17	1.54

**The suction cup is not intended for handling shear lifts. The values are given as a dimensioning guide to be used when, e.g., the acceleration/retardation causes shear forces.*

MATERIAL SPECIFICATIONS

Material	Color	Hardness °Shore A	Temperature range °F
Polyurethane, PU30/PU60	Yellow/Green transparent	30/60	50–122
Polyurethane, PU60	Green transparent	60	50–122

MATERIAL RESISTANCE

Wear resistance	Oil	Weather & ozone	Hydrolysis	Gasoline	Concentrated acids	Ethanol	Methanol	Oxidation
Excellent	Excellent	Excellent	Fair	Fair	Fair	Fair	Poor	Poor

ORDERING INFORMATION

	Suction cups with fitting	Weight (oz)	Part No.
A	Suction cup BX110P Polyurethane 30/60 thread insert G3/8" male for Vacuum Gripper System (VGS)	8.11	BX110P.5K.G40W.F
A	Suction cup BX110P Polyurethane 60 thread insert G3/8" male for Vacuum Gripper System (VGS)	8.11	BX110P.5E.G40W.F
B	Suction cup BX110P Polyurethane 30/60 brass 3/8"NPSF female	9.81	BX110P.5K.N40W.F
B	Suction cup BX110P Polyurethane 60 brass 3/8"NPSF female	9.81	BX110P.5E.N40W.F

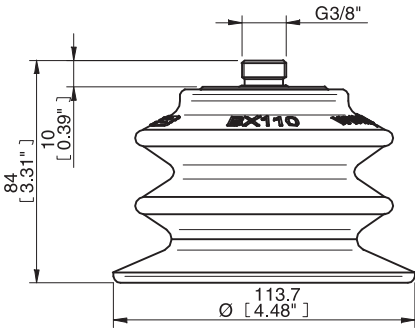

A

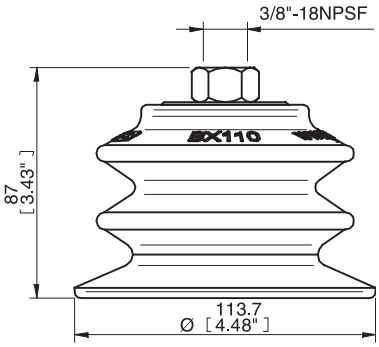

B

Rubber parts	Part No.
Suction cup BX110P Polyurethane 30/60, with filter and collar and thread insert for Vacuum Gripper System (VGS)	BX110P.5K.F
Suction cup BX110P Polyurethane 60, with filter and collar and thread insert for Vacuum Gripper System (VGS)	BX110P.5E.F

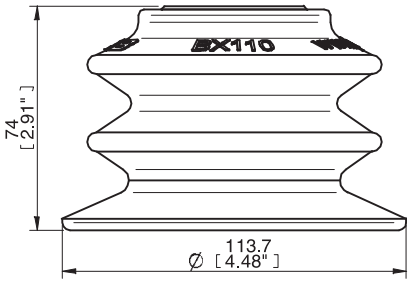

Fittings	Part No.
Thread insert G3/8" male, with O-ring for Vacuum Gripper System (VGS)	01.06.797

Spare part	Material	Temperature range °F	Part No.
Filter for BX110P	Polyester/TPE	-40–194	01.08.163

D15-2

DEEP SUCTION CUP

- Suitable for objects with curved or irregular surfaces
- Grips around corners and edges.

LIFTING FORCES & TECHNICAL DATA

Outer Dia	Lifting force vertical to the surface, lbf, at vacuum level			Lifting force parallel to the surface, lbf, at vacuum level			Volume	Min. curve radius	Max. vertical movement	Weight rubber part
in	6 -inHg	18 -inHg	27 -inHg	6 -inHg	18 -inHg	27 -inHg	in³	in	in	oz
0.63	0.65	1.75	2.47	—	—	—	0.05	0.24	0.12	0.04

MATERIAL SPECIFICATIONS

Material	Color	Hardness °Shore A	Temperature range °F
Chloroprene, CR	Black	50	-40–230
Silicone, SIL	Red	50	-40–392

MATERIAL RESISTANCE

Material	Wear resistance	Oil	Weather & ozone	Hydrolysis	Gasoline	Concentrated acids	Alcohol	Oxidation
Chloroprene, CR	Excellent	Fair	Good	Good	Fair	Poor	Good	Good
Silicone, SIL	Good	Poor	Excellent	Fair	Poor	Poor	Good	Excellent

ORDERING INFORMATION

Suction cups with fitting	Weight (oz)	Part No.
Suction cup D15-2 Chloroprene, M5 male	0.18	D15-2.10.01AC
Suction cup D15-2 Silicone, M5 male	0.18	D15-2.20.01AC

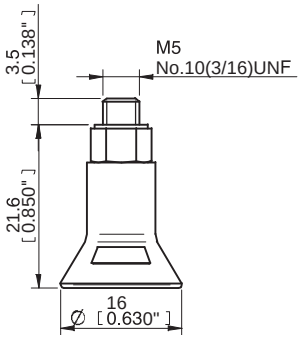

Rubber parts	Part No.
Suction cup D15-2 Chloroprene	D15-2.10
Suction cup D15-2 Silicone	D15-2.20

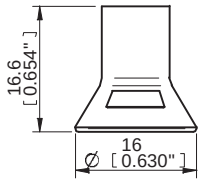

Fittings	Part No.
Fitting M5 male	01AC

D20-2

DEEP SUCTION CUP

- Suitable for objects with curved or irregular surfaces
- Grips around corners and edges.

LIFTING FORCES & TECHNICAL DATA

Outer Dia	Lifting force vertical to the surface, lbf, at vacuum level			Lifting force parallel to the surface, lbf, at vacuum level			Volume	Min. curve radius	Max. vertical movement	Weight rubber part
in	6 -inHg	18 -inHg	27 -inHg	6 -inHg	18 -inHg	27 -inHg	in^3	in	in	oz
0.87	1.33	3.37	4.05	—	—	—	0.15	0.31	0.18	0.08

MATERIAL SPECIFICATIONS

Material	Color	Hardness °Shore A	Temperature range °F
Chloroprene, CR	Black	50	-40–230
Silicone, SIL	Red	50	-40–392

MATERIAL RESISTANCE

Material	Wear resistance	Oil	Weather & ozone	Hydrolysis	Gasoline	Concentrated acids	Alcohol	Oxidation
Chloroprene, CR	Excellent	Fair	Good	Good	Fair	Poor	Good	Good
Silicone, SIL	Good	Poor	Excellent	Fair	Poor	Poor	Good	Excellent

ORDERING INFORMATION

	Suction cups with fitting	Weight (oz)	Part No.
A	Suction cup D20-2 Chloroprene, M5 female	0.19	D20-2.10.02AA
A	Suction cup D20-2 Chloroprene, M5 female, with dual flow control valve	0.19	D20-2.10.02DA
B	Suction cup D20-2 Chloroprene, G1/8" male, with mesh filter	0.19	D20-2.10.02AB
B	Suction cup D20-2 Chloroprene, G1/8" male, with mesh filter and dual flow control valve	0.19	D20-2.10.02DB
B	Suction cup D20-2 Chloroprene, NPT" male, with mesh filter	0.19	D20-2.10.02AC
B	Suction cup D20-2 Chloroprene, NPT" male, with dual flow control valve	0.19	D20-2.10.02DC
C	Suction cup D20-2 Chloroprene, G1/8" male/M5 female	0.15	D20-2.10.02AD
C	Suction cup D20-2 Chloroprene, G1/8" male/M5 female, with mesh filter	0.15	D20-2.10.02AF
C	Suction cup D20-2 Chloroprene, G1/8" male/M5 female, with dual flow control valve	0.15	D20-2.10.02DD
D	Suction cup D20-2 Chloroprene, 5xM5 female	0.43	D20-2.10.02AE
D	Suction cup D20-2 Chloroprene, 5xM5 female, with dual flow control valve	0.43	D20-2.10.02DE
E	Suction cup D20-2 Chloroprene, G1/8" male/M5 female, PA	0.14	D20-2.10.02CD
A	Suction cup D20-2 Silicone, M5 female	0.19	D20-2.20.02AA
A	Suction cup D20-2 Silicone, M5 female, with dual flow control valve	0.19	D20-2.20.02DA
B	Suction cup D20-2 Silicone, G1/8" male, with mesh filter	0.19	D20-2.20.02AB
B	Suction cup D20-2 Silicone, G1/8" male, with mesh filter and dual flow control valve	0.19	D20-2.20.02DB
B	Suction cup D20-2 Silicone, NPT1/8 male, with mesh filter	0.19	D20-2.20.02AC
B	Suction cup D20-2 Silicone, 1/8" NPT male, with dual flow control valve	0.19	D20-2.20.02DC
C	Suction cup D20-2 Silicone, G1/8" male/M5 female	0.15	D20-2.20.02AD
C	Suction cup D20-2 Silicone, G1/8" male/M5 female, with mesh filter	0.15	D20-2.20.02AF
C	Suction cup D20-2 Silicone, G1/8" male/M5 female, with dual flow control valve	0.15	D20-2.20.02DD

	Suction cups with fitting	Weight (oz)	Part No.
D	Suction cup D20-2 Silicone, 5xM5 female	0.43	D20-2.20.02AE
D	Suction cup D20-2 Silicone, 5xM5 female, with dual flow control valve	0.43	D20-2.20.02DE
E	Suction cup D20-2 Silicone, G1/8" male/M5 female, PA	0.14	D20-2.20.02CD

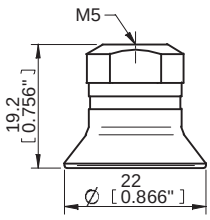

A

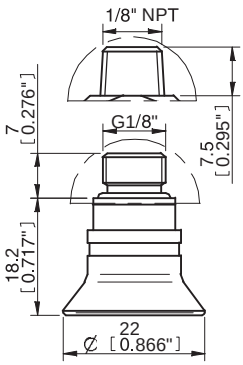

B

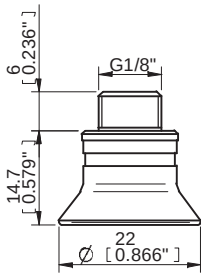

C

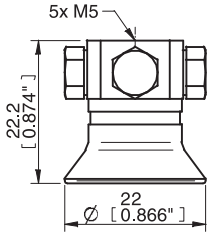

D

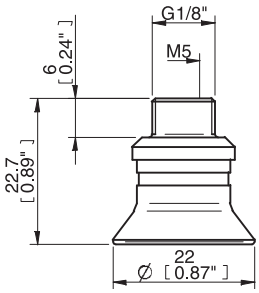

E

Rubber parts	Part No.
Suction cup D20-2 Chloroprene	D20-2.10
Suction cup D20-2 Silicone	D20-2.20

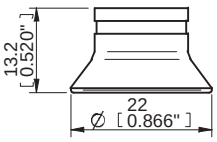

Fittings	Part No.
Fitting M5 female	02AA
Fitting M5 female, with dual flow control valve	02DA
Fitting G1/8" male, with mesh filter	02AB
Fitting G1/8" male, with mesh filter and dual flow control valve	02DB
Fitting 1/8" NPT male, with mesh filter	02AC
Fitting 1/8" NPT male, with dual flow control valve	02DC
Fitting G1/8" male/M5 female	02AD
Fitting G1/8" male/M5 female, with mesh filter	02AF
Fitting G1/8" male/M5 female, with dual flow control valve	02DD
Fitting 5xM5 female	02AE
Fitting 5xM5 female, with dual flow control valve	02DE
Fitting G1/8" male/M5 female, PA	02CD

D30-2

DEEP SUCTION CUP

- Suitable for objects with curved or irregular surfaces
- Grips around corners and edges.

LIFTING FORCES & TECHNICAL DATA

Outer Dia	Lifting force vertical to the surface, lbf, at vacuum level			Lifting force parallel to the surface, lbf, at vacuum level			Volume	Min. curve radius	Max. vertical movement	Weight rubber part
in	6 -inHg	18 -inHg	27 -inHg	6 -inHg	18 -inHg	27 -inHg	in³	in	in	oz
1.26	3.15	5.85	6.97	—	—	—	0.30	0.51	0.20	0.14

MATERIAL SPECIFICATIONS

Material	Color	Hardness °Shore A	Temperature range °F
Chloroprene, CR	Black	50	-40–230
Silicone, SIL	Red	50	-40–392

MATERIAL RESISTANCE

Material	Wear resistance	Oil	Weather & ozone	Hydrolysis	Gasoline	Concentrated acids	Alcohol	Oxidation
Chloroprene, CR	Excellent	Fair	Good	Good	Fair	Poor	Good	Good
Silicone, SIL	Good	Poor	Excellent	Fair	Poor	Poor	Good	Excellent

ORDERING INFORMATION

	Suction cups with fitting	Weight (oz)	Part No.
A	Suction cup D30-2 Chloroprene, M5 female	0.25	D30-2.10.02AA
A	Suction cup D30-2 Chloroprene, M5 female, with dual flow control valve	0.25	D30-2.10.02DA
B	Suction cup D30-2 Chloroprene, G1/8" male, with mesh filter	0.25	D30-2.10.02AB
B	Suction cup D30-2 Chloroprene, G1/8" male, with mesh filter and dual flow control valve	0.25	D30-2.10.02DB
B	Suction cup D30-2 Chloroprene, 1/8" NPT male, with mesh filter	0.25	D30-2.10.02AC
B	Suction cup D30-2 Chloroprene, 1/8" NPT male, with dual flow control valve	0.25	D30-2.10.02DC
C	Suction cup D30-2 Chloroprene, G1/8" male/M5 female	0.21	D30-2.10.02AD
C	Suction cup D30-2 Chloroprene, G1/8" male/M5 female, with mesh filter	0.21	D30-2.10.02AF
C	Suction cup D30-2 Chloroprene, G1/8" male/M5 female, with dual flow control valve	0.21	D30-2.10.02DD
D	Suction cup D30-2 Chloroprene, 5xM5 female	0.49	D30-2.10.02AE
D	Suction cup D30-2 Chloroprene, 5xM5 female, with dual flow control valve	0.49	D30-2.10.02DE
E	Suction cup D30-2 Chloroprene, G1/8" male/M5 female, PA	0.20	D30-2.10.02CD
A	Suction cup D30-2 Silicone, M5 female	0.25	D30-2.20.02AA
A	Suction cup D30-2 Silicone, M5 female, with dual flow control valve	0.25	D30-2.20.02DA
B	Suction cup D30-2 Silicone, G1/8" male, with mesh filter	0.25	D30-2.20.02AB
B	Suction cup D30-2 Silicone, G1/8" male, with mesh filter and dual flow control valve	0.25	D30-2.20.02DB
B	Suction cup D30-2 Silicone, 1/8" NPT male, with mesh filter	0.25	D30-2.20.02AC
B	Suction cup D30-2 Silicone, 1/8" NPT male, with dual flow control valve	0.25	D30-2.20.02DC
C	Suction cup D30-2 Silicone, G1/8" male/M5 female	0.21	D30-2.20.02AD
C	Suction cup D30-2 Silicone, G1/8" male/M5 female, with mesh filter	0.21	D30-2.20.02AF

	Suction cups with fitting	Weight (oz)	Part No.
C	Suction cup D30-2 Silicone, G1/8" male/M5 female, with dual flow control valve	0.21	D30-2.20.02DD
D	Suction cup D30-2 Silicone, 5xM5 female	0.49	D30-2.20.02AE
D	Suction cup D30-2 Silicone, 5xM5 female, with dual flow control valve	0.49	D30-2.20.02DE
E	Suction cup D30-2 Silicone, G1/8" male/M5 female, PA	0.20	D30-2.20.02CD

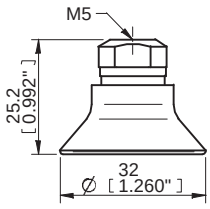

A

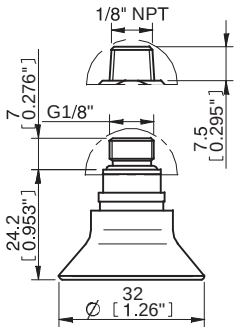

B

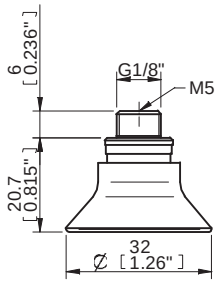

C

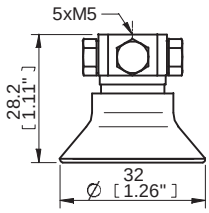

D

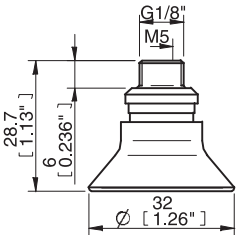

E

Rubber parts	Part No.
Suction cup D30-2 Chloroprene	D30-2.10
Suction cup D30-2 Silicone	D30-2.20

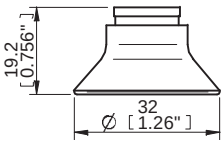

Fittings	Part No.
Fitting M5 female	02AA
Fitting M5 female, with dual flow control valve	02DA
Fitting G1/8" male, with mesh filter	02AB
Fitting G1/8" male, with mesh filter and dual flow control valve	02DB
Fitting 1/8" NPT male, with mesh filter	02AC
Fitting 1/8" NPT male, with dual flow control valve	02DC
Fitting G1/8" male/M5 female	02AD
Fitting G1/8" male/M5 female, with mesh filter	02AF
Fitting G1/8" male/M5 female, with dual flow control valve	02DD
Fitting 5xM5 female	02AE
Fitting 5xM5 female, with dual flow control valve	02DE
Fitting G1/8" male/M5 female, PA	02CD

D50

DEEP SUCTION CUP

- Suitable for objects with curved or irregular surfaces
- Grips around corners and edges.

LIFTING FORCES & TECHNICAL DATA

Outer Dia	Lifting force vertical to the surface, lbf, at vacuum level			Lifting force parallel to the surface, lbf, at vacuum level			Volume	Min. curve radius	Max. vertical movement	Weight rubber part
in	6 -inHg	18 -inHg	27 -inHg	6 -inHg	18 -inHg	27 -inHg	in³	in	in	oz
2.09	8.09	17.5	22.0	—	—	—	0.92	0.98	0.39	0.63

MATERIAL SPECIFICATIONS

Material	Color	Hardness °Shore A	Temperature range °F
Chloroprene, CR	Black	50	-40–230
Silicone, SIL	Red	50	-40–392

MATERIAL RESISTANCE

Material	Wear resistance	Oil	Weather & ozone	Hydrolysis	Gasoline	Concentrated acids	Alcohol	Oxidation
Chloroprene, CR	Excellent	Fair	Good	Good	Fair	Poor	Good	Good
Silicone, SIL	Good	Poor	Excellent	Fair	Poor	Poor	Good	Excellent

ORDERING INFORMATION

	Suction cups with fitting	Weight (oz)	Part No.
A	Suction cup D50 Chloroprene, 1/8"NPSF female	0.98	D50.10.05AA
A	Suction cup D50 Chloroprene, 1/8"NPSF female, with mesh filter	0.98	D50.10.05AG
A	Suction cup D50 Chloroprene, 1/8"NPSF female, with dual flow control valve	0.98	D50.10.05DA
B	Suction cup D50 Chloroprene, G1/4" male, with mesh filter	0.98	D50.10.05AB
B	Suction cup D50 Chloroprene, G1/4" male, with mesh filter and dual flow control valve	0.98	D50.10.05DB
B	Suction cup D50 Chloroprene, 1/4" NPT male, with mesh filter	0.98	D50.10.05AC
B	Suction cup D50 Chloroprene, 1/4" NPT male, with dual flow control valve	0.98	D50.10.05DC
C	Suction cup D50 Chloroprene, G3/8" male, with mesh filter	0.98	D50.10.05AD
C	Suction cup D50 Chloroprene, G3/8" male, with mesh filter and dual flow control valve	0.98	D50.10.05DD
C	Suction cup D50 Chloroprene, 3/8" NPT male, with mesh filter	0.98	D50.10.05AE
C	Suction cup D50 Chloroprene, 3/8" NPT male, with dual flow control valve	0.98	D50.10.05DE
D	Suction cup D50 Chloroprene, 5x1/8"NPSF female	1.69	D50.10.05AF
D	Suction cup D50 Chloroprene, 5x1/8"NPSF female, with dual flow control valve	1.69	D50.10.05DF
E	Suction cup D50 Chloroprene, 1/8"NPSF female, PA	0.83	D50.10.05CA
A	Suction cup D50 Silicone, 1/8"NPSF female	0.98	D50.20.05AA
A	Suction cup D50 Silicone, 1/8"NPSF female, with mesh filter	0.98	D50.20.05AG
A	Suction cup D50 Silicone, 1/8"NPSF female, with dual flow control valve	0.98	D50.20.05DA
B	Suction cup D50 Silicone, G1/4" male, with mesh filter	0.98	D50.20.05AB
B	Suction cup D50 Silicone, G1/4" male, with mesh filter and dual flow control valve	0.98	D50.20.05DB

	Suction cups with fitting	Weight (oz)	Part No.
B	Suction cup D50 Silicone, 1/4" NPT male, with mesh filter	0.98	D50.20.05AC
B	Suction cup D50 Silicone, 1/4" NPT male, with dual flow control valve	0.98	D50.20.05DC
C	Suction cup D50 Silicone, G3/8" male, with mesh filter	0.98	D50.20.05AD
C	Suction cup D50 Silicone, G3/8" male, with mesh filter and dual flow control valve	0.98	D50.20.05DD
C	Suction cup D50 Silicone, 3/8" NPT male, with mesh filter	0.98	D50.20.05AE
C	Suction cup D50 Silicone, 3/8" NPT male, with dual flow control valve	0.98	D50.20.05DE
D	Suction cup D50 Silicone, 5x1/8"NPSF female	1.69	D50.20.05AF
D	Suction cup D50 Silicone, 5x1/8"NPSF female, with dual flow control valve	1.69	D50.20.05DF
E	Suction cup D50 Silicone, 1/8"NPSF female, PA	0.83	D50.20.05CA

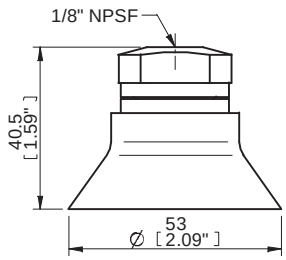

A

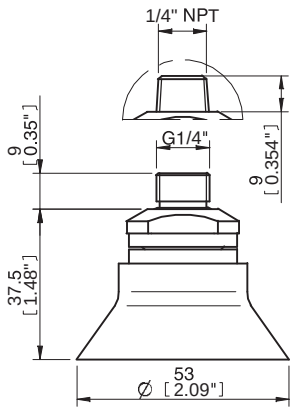

B

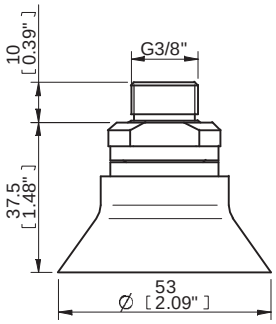

C

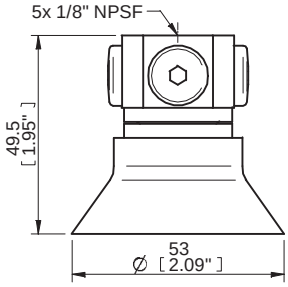

D

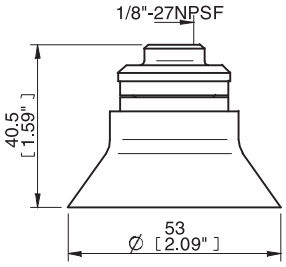

E

Rubber parts	Part No.
Suction cup D50 Chloroprene	D50.10
Suction cup D50 Silicone	D50.20

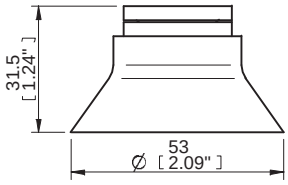

Fittings	Part No.
Fitting 1/8"NPSF female	05AA
Fitting 1/8"NPSF female, with mesh filter	05AG
Fitting 1/8"NPSF female, with dual flow control valve	05DA
Fitting G1/4" male, with mesh filter	05AB
Fitting G1/4" male, with dual flow control valve	05DB
Fitting 1/4" NPT male, with mesh filter	05AC
Fitting 1/4" NPT male, with dual flow control valve	05DC
Fitting G3/8" male, with mesh filter	05AD
Fitting G3/8" male, with mesh filter and dual flow control valve	05DD
Fitting 3/8" NPT male, with mesh filter	05AE
Fitting 3/8" NPT male, with dual flow control valve	05DE
Fitting 5x1/8"NPSF female	05AF
Fitting 5x1/8"NPSF female, with dual flow control valve	05DF
Fitting 1/8"NPSF female, PA	05CA

DF80P

DEEP FLAT SUCTION CUP

- Suitable for flat, curved or irregular surfaces such as those of sheet metal, plastic or glass parts for vehicles.
- Grips around corner and edges.
- Comes with a 19 mm diameter interface for a special quick connector mainly used by Japanese automotive companies.
- DURAFLEX® material features the elasticity of rubber in combination with the wear resistance of polyurethane.
- The DURAFLEX® material is mark-free and also free from paint-impairing substances.

LIFTING FORCES & TECHNICAL DATA

Material	Lifting force vertical to the surface, lbf, at vacuum level			Lifting force parallel to the surface, lbf, at vacuum level			Volume	Min. curve radius	Max. vertical movement	Weight
	6 -inHg	18 -inHg	27 -inHg	6 -inHg	18 -inHg	27 -inHg	in³	in	in	oz
PU60	15.7	43.8	60.7	16.9	32.6	43.8	2.93	2.36	0.55	1.59

MATERIAL SPECIFICATIONS

Material	Color	Hardness °Shore A	Temperature range °F
Polyurethane, PU60	Green transparent	60	50-122

MATERIAL RESISTANCE

Wear resistance	Oil	Weather & ozone	Hydrolysis	Gasoline	Concentrated acids	Ethanol	Methanol	Oxidation
Excellent	Excellent	Excellent	Fair	Fair	Fair	Fair	Poor	Poor

ORDERING INFORMATION

Suction cup with fitting	Part No.
Suction cup DF80P Polyurethane 60, Ø 19mm female	DF80P.5E.T40W

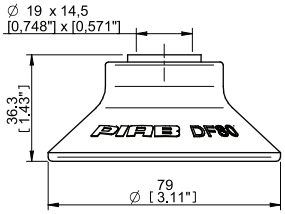

F15

FLAT SUCTION CUP WITH CLEATS

- Suitable for flat objects.
- Good stability and little inherent movement.
- Recommended when the lifting force is parallel to the surface of the object.
- Cleats prevent thin, sensitive objects from being deformed and gives extra friction when the lifting force is parallel.

LIFTING FORCES & TECHNICAL DATA

Outer Dia	Lifting force vertical to the surface, lbf, at vacuum level			Lifting force parallel to the surface, lbf, at vacuum level			Volume	Min. curve radius	Max. vertical movement	Weight rubber part
in	6 -inHg	18 -inHg	27 -inHg	6 -inHg	18 -inHg	27 -inHg	in^3	in	in	oz
0.62	0.79	1.91	2.47	0.79	1.46	1.69	0.02	0.51	0.04	0.03

MATERIAL SPECIFICATIONS

Material	Color	Hardness °Shore A	Temperature range °F
Chloroprene, CR	Black	50	-40–230
Silicone, SIL	Red	50	-40–392

MATERIAL RESISTANCE

Material	Wear resistance	Oil	Weather & ozone	Hydrolysis	Gasoline	Concentrated acids	Alcohol	Oxidation
Chloroprene, CR	Excellent	Fair	Good	Good	Fair	Poor	Good	Good
Silicone, SIL	Good	Poor	Excellent	Fair	Poor	Poor	Good	Excellent

ORDERING INFORMATION

Suction cups with fitting	Weight (oz)	Part No.
Suction cup F15 Chloroprene, M5 male	0.11	F15.10.01AC
Suction cup F15 Silicone, M5 male	0.11	F15.20.01AC

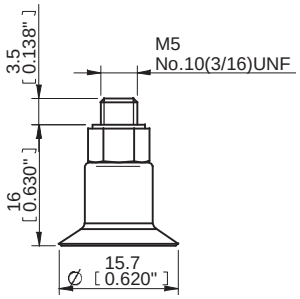

Rubber parts	Part No.
Suction cup F15 Chloroprene	F15.10
Suction cup F15 Silicone	F15.20

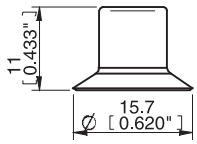

Fittings	Part No.
Fitting M5 male	01AC

F20

FLAT SUCTION CUP WITH CLEATS

- Suitable for flat objects.
- Good stability and little inherent movement.
- Recommended when the lifting force is parallel to the surface of the object.
- Cleats prevent thin, sensitive objects from being deformed and gives extra friction when the lifting force is parallel.

LIFTING FORCES & TECHNICAL DATA

Outer Dia	Lifting force vertical to the surface, lbf, at vacuum level			Lifting force parallel to the surface, lbf, at vacuum level			Volume	Min. curve radius	Max. vertical movement	Weight rubber part
in	6 -inHg	18 -inHg	27 -inHg	6 -inHg	18 -inHg	27 -inHg	in³	in	in	oz
0.87	1.35	3.26	4.27	1.12	1.80	1.91	0.06	0.71	0.06	0.04

MATERIAL SPECIFICATIONS

Material	Color	Hardness °Shore A	Temperature range °F
Chloroprene, CR	Black	50	-40–230
Silicone, SIL	Red	50	-40–392

MATERIAL RESISTANCE

Material	Wear resistance	Oil	Weather & ozone	Hydrolysis	Gasoline	Concentrated acids	Alcohol	Oxidation
Chloroprene, CR	Excellent	Fair	Good	Good	Fair	Poor	Good	Good
Silicone, SIL	Good	Poor	Excellent	Fair	Poor	Poor	Good	Excellent

ORDERING INFORMATION

	Suction cups with fitting	Weight (oz)	Part No.
A	Suction cup F20 Chloroprene, M5 female	0.15	F20.10.02AA
A	Suction cup F20 Chloroprene, M5 female, with dual flow control valve	0.15	F20.10.02DA
B	Suction cup F20 Chloroprene, G1/8" male, with mesh filter	0.15	F20.10.02AB
B	Suction cup F20 Chloroprene, G1/8" male, with mesh filter and dual flow control valve	0.15	F20.10.02DB
B	Suction cup F20 Chloroprene, 1/8" NPT male, with mesh filter	0.15	F20.10.02AC
B	Suction cup F20 Chloroprene, 1/8" NPT male, with dual flow control valve	0.15	F20.10.02DC
C	Suction cup F20 Chloroprene, G1/8" male/M5 female	0.11	F20.10.02AD
C	Suction cup F20 Chloroprene, G1/8" male/M5 female, with mesh filter	0.11	F20.10.02AF
C	Suction cup F20 Chloroprene, G1/8" male/M5 female, with dual flow control valve	0.11	F20.10.02DD
D	Suction cup F20 Chloroprene, 5xM5 female	0.39	F20.10.02AE
D	Suction cup F20 Chloroprene, 5xM5 female, with dual flow control valve	0.39	F20.10.02DE
E	Suction cup F20 Chloroprene, G1/8" male/M5 female, PA	0.10	F20.10.02CD
A	Suction cup F20 Silicone, M5 female	0.15	F20.20.02AA
A	Suction cup F20 Silicone, M5 female, with dual flow control valve	0.15	F20.20.02DA
B	Suction cup F20 Silicone, G1/8" male, with mesh filter	0.15	F20.20.02AB
B	Suction cup F20 Silicone, G1/8" male, with mesh filter and dual flow control valve	0.15	F20.20.02DB
B	Suction cup F20 Silicone, 1/8" NPT male, with mesh filter	0.15	F20.20.02AC
B	Suction cup F20 Silicone, 1/8" NPT male, with dual flow control valve	0.15	F20.20.02DC
C	Suction cup F20 Silicone, G1/8" male/M5 female	0.11	F20.20.02AD
C	Suction cup F20 Silicone, G1/8" male/M5 female, with mesh filter	0.11	F20.20.02AF
C	Suction cup F20 Silicone, G1/8" male/M5 female, with dual flow control valve	0.11	F20.20.02DD
D	Suction cup F20 Silicone, 5xM5 female	0.39	F20.20.02AE
D	Suction cup F20 Silicone, 5xM5 female, with dual flow control valve	0.39	F20.20.02DE
E	Suction cup F20 Silicone, G1/8" male/M5 female, PA	0.10	F20.20.02CD

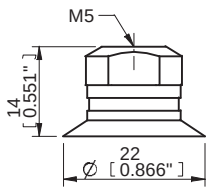

A

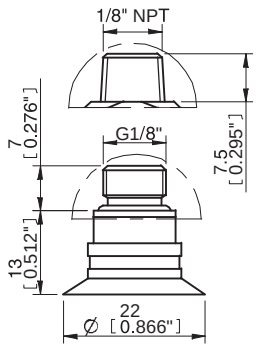

B

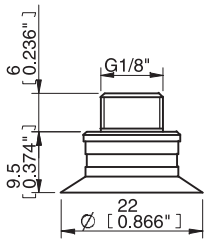

C

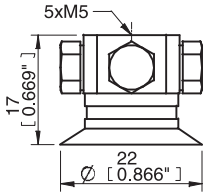

D

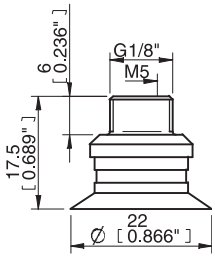

E

Rubber parts	Part No.
Suction cup F20 Chloroprene	F20.10
Suction cup F20 Silicone	F20.20

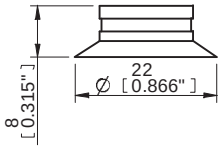

Fittings	Part No.
Fitting M5 female	02AA
Fitting M5 female, with dual flow control valve	02DA
Fitting G1/8" male, with mesh filter	02AB
Fitting G1/8" male, with mesh filter and dual flow control valve	02DB
Fitting 1/8" NPT male, with mesh filter	02AC
Fitting 1/8" NPT male, with dual flow control valve	02DC
Fitting G1/8" male/M5 female	02AD
Fitting G1/8" male/M5 female, with mesh filter	02AF
Fitting G1/8" male/M5 female, with dual flow control valve	02DD
Fitting 5xM5 female	02AE
Fitting 5xM5 female, with dual flow control valve	02DE
Fitting G1/8" male/M5 female, PA	02CD

F25

FLAT SUCTION CUP WITH CLEATS

- Suitable for flat objects.
- Good stability and little inherent movement.
- Recommended when the lifting force is parallel to the surface of the object.
- Cleats prevent thin, sensitive objects from being deformed and gives extra friction when the lifting force is parallel.

LIFTING FORCES & TECHNICAL DATA

Outer Dia	Lifting force vertical to the surface, lbf, at vacuum level			Lifting force parallel to the surface, lbf, at vacuum level			Volume	Min. curve radius	Max. vertical movement	Weight rubber part
in	6 -inHg	18 -inHg	27 -inHg	6 -inHg	18 -inHg	27 -inHg	in³	in	in	oz
1.06	2.02	4.38	5.62	1.80	2.02	2.25	0.07	0.87	0.06	0.06

MATERIAL SPECIFICATIONS

Material	Color	Hardness °Shore A	Temperature range °F
Chloroprene, CR	Black	50	-40–230
Silicone, SIL	Red	50	-40–392

MATERIAL RESISTANCE

Material	Wear resistance	Oil	Weather & ozone	Hydrolysis	Gasoline	Concentrated acids	Alcohol	Oxidation
Chloroprene, CR	Excellent	Fair	Good	Good	Fair	Poor	Good	Good
Silicone, SIL	Good	Poor	Excellent	Fair	Poor	Poor	Good	Excellent

ORDERING INFORMATION

	Suction cups with fitting	Weight (oz)	Part No.
A	Suction cup F25 Chloroprene, M5 female	0.17	F25.10.02AA
A	Suction cup F25 Chloroprene, M5 female, with dual flow control valve	0.17	F25.10.02DA
B	Suction cup F25 Chloroprene, G1/8" male, with mesh filter	0.17	F25.10.02AB
B	Suction cup F25 Chloroprene, G1/8" male, with mesh filter and dual flow control valve	0.17	F25.10.02DB
B	Suction cup F25 Chloroprene, 1/8" NPT male, with mesh filter	0.17	F25.10.02AC
B	Suction cup F25 Chloroprene, 1/8" NPT male, with dual flow control valve	0.17	F25.10.02DC
C	Suction cup F25 Chloroprene, G1/8" male/M5 female	0.13	F25.10.02AD
C	Suction cup F25 Chloroprene, G1/8" male/M5 female, with mesh filter	0.13	F25.10.02AF
C	Suction cup F25 Chloroprene, G1/8" male/M5 female, with dual flow control valve	0.13	F25.10.02DD
D	Suction cup F25 Chloroprene, 5xM5 female	0.41	F25.10.02AE
D	Suction cup F25 Chloroprene, 5xM5 female, with dual flow control valve	0.41	F25.10.02DE
E	Suction cup F25 Chloroprene, G1/8" male/M5 female, PA	0.12	F25.10.02CD
A	Suction cup F25 Silicone, M5 female	0.17	F25.20.02AA
A	Suction cup F25 Silicone, M5 female, with dual flow control valve	0.17	F25.20.02DA
B	Suction cup F25 Silicone, G1/8" male, with mesh filter	0.17	F25.20.02AB
B	Suction cup F25 Silicone, G1/8" male, with mesh filter and dual flow control valve	0.17	F25.20.02DB
B	Suction cup F25 Silicone, 1/8" NPT male, with mesh filter	0.17	F25.20.02AC
B	Suction cup F25 Silicone, 1/8" NPT male, with dual flow control valve	0.17	F25.20.02DC
C	Suction cup F25 Silicone, G1/8" male/M5 female	0.13	F25.20.02AD
C	Suction cup F25 Silicone, G1/8" male/M5 female, with mesh filter	0.13	F25.20.02AF
C	Suction cup F25 Silicone, G1/8" male/M5 female, with dual flow control valve	0.13	F25.20.02DD
D	Suction cup F25 Silicone, 5xM5 female	0.41	F25.20.02AE
D	Suction cup F25 Silicone, 5xM5 female, with dual flow control valve	0.41	F25.20.02DE
E	Suction cup F25 Silicone, G1/8" male/M5 female, PA	0.12	F25.20.02CD

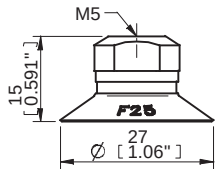

A

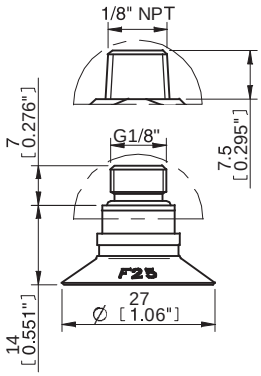

B

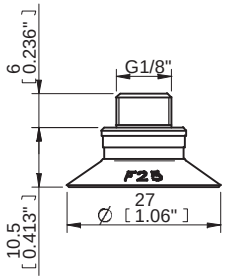

C

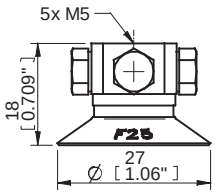

D

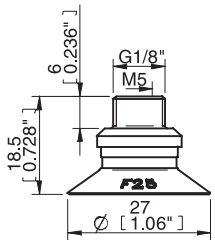

E

Rubber parts	Part No.
Suction cup F25 Chloroprene	F25.10
Suction cup F25 Silicone	F25.20

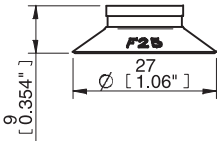

Fittings	Part No.
Fitting M5 female	02AA
Fitting M5 female, with dual flow control valve	02DA
Fitting G1/8" male, with mesh filter	02AB
Fitting G1/8" male, with mesh filter and dual flow control valve	02DB
Fitting 1/8" NPT male, with mesh filter	02AC
Fitting 1/8" NPT male, with dual flow control valve	02DC
Fitting G1/8" male/M5 female	02AD
Fitting G1/8" male/M5 female, with mesh filter	02AF
Fitting G1/8" male/M5 female, with dual flow control valve	02DD
Fitting 5xM5 female	02AE
Fitting 5xM5 female, with dual flow control valve	02DE
Fitting G1/8" male/M5 female, PA	02CD

F30-2

FLAT SUCTION CUP WITH CLEATS

- Suitable for flat objects.
- Good stability and little inherent movement.
- Recommended when the lifting force is parallel to the surface of the object.
- Cleats prevent thin, sensitive objects from being deformed and gives extra friction when the lifting force is parallel.

LIFTING FORCES & TECHNICAL DATA

Outer Dia	Lifting force vertical to the surface, lbf, at vacuum level			Lifting force parallel to the surface, lbf, at vacuum level			Volume	Min. curve radius	Max. vertical movement	Weight rubber part
in	6 -inHg	18 -inHg	27 -inhg	6 -inHg	18 -inHg	27 -inHg	in³	in	in	oz
1.26	2.70	5.62	6.97	2.50	3.60	4.50	0.12	0.98	0.08	0.08

MATERIAL SPECIFICATIONS

Material	Color	Hardness °Shore A	Temperature range °F
Chloroprene, CR	Black	50	-40–230
Silicone, SIL	Red	50	-40–392

MATERIAL RESISTANCE

Material	Wear resistance	Oil	Weather & ozone	Hydrolysis	Gasoline	Concentrated acids	Alcohol	Oxidation
Chloroprene, CR	Excellent	Fair	Good	Good	Fair	Poor	Good	Good
Silicone, SIL	Good	Poor	Excellent	Fair	Poor	Poor	Good	Excellent

ORDERING INFORMATION

	Suction cups with fitting	Weight (oz)	Part No.
A	Suction cup F30-2 Chloroprene, M5 female	0.19	F30-2.10.02AA
A	Suction cup F30-2 Chloroprene, M5 female, with dual flow control valve	0.19	F30-2.10.02DA
B	Suction cup F30-2 Chloroprene, G1/8" male, with mesh filter	0.19	F30-2.10.02AB
B	Suction cup F30-2 Chloroprene, G1/8" male, with mesh filter and dual flow control valve	0.19	F30-2.10.02DB
B	Suction cup F30-2 Chloroprene, 1/8" NPT male, with mesh filter	0.19	F30-2.10.02AC
B	Suction cup F30-2 Chloroprene, 1/8" NPT male, with dual flow control valve	0.19	F30-2.10.02DC
C	Suction cup F30-2 Chloroprene, G1/8" male/M5 female	0.15	F30-2.10.02AD
C	Suction cup F30-2 Chloroprene, G1/8" male/M5 female, with mesh filter	0.15	F30-2.10.02AF
C	Suction cup F30-2 Chloroprene, G1/8" male/M5 female, with dual flow control valve	0.15	F30-2.10.02DD
D	Suction cup F30-2 Chloroprene, 5xM5 female	0.43	F30-2.10.02AE
D	Suction cup F30-2 Chloroprene, 5xM5 female, with dual flow control valve	0.43	F30-2.10.02DE
E	Suction cup F30-2 Chloroprene, G1/8" male/M5 female PA	0.14	F30-2.10.02CD
F	Suction cup F30-2 Chloroprene, G1/8" male/M5 female, with cone valve	0.22	F30-2.10.02UV
A	Suction cup F30-2 Silicone, M5 female	0.19	F30-2.20.02AA
A	Suction cup F30-2 Silicone, M5 female, with dual flow control valve	0.19	F30-2.20.02DA
B	Suction cup F30-2 Silicone, G1/8" male, with mesh filter	0.19	F30-2.20.02AB
B	Suction cup F30-2 Silicone, G1/8" male, with mesh filter and dual flow control valve	0.19	F30-2.20.02DB
B	Suction cup F30-2 Silicone, 1/8" NPT male, with mesh filter	0.19	F30-2.20.02AC
B	Suction cup F30-2 Silicone, 1/8" NPT male, with dual flow control valve	0.19	F30-2.20.02DC
C	Suction cup F30-2 Silicone, G1/8" male/M5 female	0.15	F30-2.20.02AD
C	Suction cup F30-2 Silicone, G1/8" male/M5 female, with mesh filter	0.15	F30-2.20.02AF
C	Suction cup F30-2 Silicone, G1/8" male/M5 female, with dual flow control valve	0.15	F30-2.20.02DD
D	Suction cup F30-2 Silicone, 5xM5 female	0.43	F30-2.20.02AE
D	Suction cup F30-2 Silicone, 5xM5 female, with dual flow control valve	0.43	F30-2.20.02DE

	Suction cups with fitting	Weight (oz)	Part No.
E	Suction cup F30-2 Silicone, G1/8" male/M5 female PA	0.14	F30-2.20.02CD
F	Suction cup F30-2 Silicone, G1/8" male/M5 female, with cone valve	0.22	F30-2.20.02UV

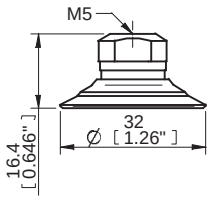

A

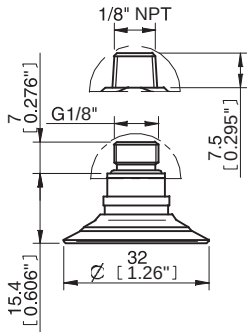

B

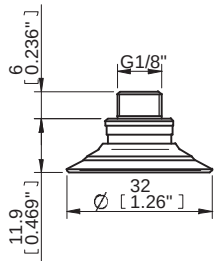

C

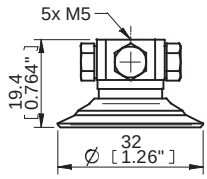

D

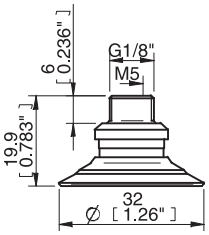

E

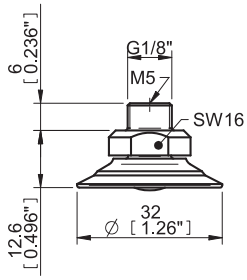

F

Rubber parts	Part No.
Suction cup F30-2 Chloroprene	F30-2.10
Suction cup F30-2 Silicone	F30-2.20

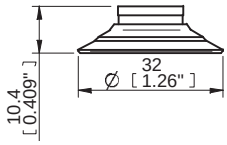

Fittings	Part No.
Fitting M5 female	02AA
Fitting M5 female, with dual flow control valve	02DA
Fitting G1/8" male, with mesh filter	02AB
Fitting G1/8" male, with mesh filter and dual flow control valve	02DB
Fitting 1/8" NPT male, with mesh filter	02AC
Fitting 1/8" NPT male, with dual flow control valve	02DC
Fitting G1/8" male/M5 female	02AD
Fitting G1/8" male/M5 female, with mesh filter	02AF
Fitting G1/8" male/M5 female, with dual flow control valve	02DD
Fitting G1/8" male/M5 female, with cone valve	02UV
Fitting 5xM5 female	02AE
Fitting 5xM5 female, with dual flow control valve	02DE
Fitting G1/8" male/M5 female, PA	02CD

Spare Part	Material	Temperature range °F	Part No.
Cone valve for F40-2	Al/SS/NBR	-40–230	31.50.056

F40-2

FLAT SUCTION CUP WITH CLEATS

- Suitable for flat objects.
- Good stability and little inherent movement.
- Recommended when the lifting force is parallel to the surface of the object.
- Cleats prevent thin, sensitive objects from being deformed and gives extra friction when the lifting force is parallel.

LIFTING FORCES & TECHNICAL DATA

Outer Dia	Lifting force vertical to the surface, lbf, at vacuum level			Lifting force parallel to the surface, lbf, at vacuum level			Volume	Min. curve radius	Max. vertical movement	Weight rubber part
in	6 -inHg	18 -inHg	27 -inHg	6 -inHg	18 -inHg	27 -inHg	in³	in	in	oz
1.65	4.50	8.99	11.2	3.37	5.62	6.74	0.29	2.00	0.10	0.19

MATERIAL SPECIFICATIONS

Material	Color	Hardness °Shore A	Temperature range °F
Nitrile-PVC, NPV	Black	50	32–194*
Silicone, SIL	Red	50	-40–392*

**Filter disk max. 176 °F*

MATERIAL RESISTANCE

Material	Wear resistance	Oil	Weather & Ozone	Hydrolysis	Gasoline	Concentrated acids	Alcohol	Oxidation
Nitrile-PVC, NPV	Excellent	Excellent	Good	Good	Excellent	Fair	Good	Good
Silicone, SIL	Good	Poor	Excellent	Fair	Poor	Poor	Good	Excellent

ORDERING INFORMATION

	Suction cups with fitting	Weight (oz)	Part No.
A	Suction cup F40-2 Nitrile-PVC, 1/8"NPSF female	0.40	F40-2.30.04AA
A	Suction cup F40-2 Nitrile-PVC, 1/8"NPSF female, with mesh filter	0.40	F40-2.30.04AG
A	Suction cup F40-2 Nitrile-PVC, 1/8"NPSF female, with dual flow control valve	0.40	F40-2.30.04DA
B	Suction cup F40-2 Nitrile-PVC, G1/4" male, with mesh filter	0.44	F40-2.30.04AB
B	Suction cup F40-2 Nitrile-PVC, G1/4" male, with mesh filter and dual flow control valve	0.44	F40-2.30.04DB
B	Suction cup F40-2 Nitrile-PVC, 1/4" NPT male, with mesh filter	0.44	F40-2.30.04AC
B	Suction cup F40-2 Nitrile-PVC, 1/4" NPT male, with dual flow control valve	0.44	F40-2.30.04DC
C	Suction cup F40-2 Nitrile-PVC, G3/8" male, with mesh filter	0.54	F40-2.30.04AD
C	Suction cup F40-2 Nitrile-PVC, G3/8" male, with mesh filter and dual flow control valve	0.54	F40-2.30.04DD
C	Suction cup F40-2 Nitrile-PVC, 3/8" NPT male, with mesh filter	0.54	F40-2.30.04AE
C	Suction cup F40-2 Nitrile-PVC, 3/8" NPT male, with dual flow control valve	0.54	F40-2.30.04DE
D	Suction cup F40-2 Nitrile-PVC, 5x1/8"NPSF female	0.90	F40-2.30.04AF
D	Suction cup F40-2 Nitrile-PVC, 5x1/8"NPSF female, with dual flow control valve	0.90	F40-2.30.04DF
E	Suction cup F40-2 Nitrile-PVC, 1/8"NPSF female PA	0.27	F40-2.30.04AH
F	Suction cup F40-2 Nitrile-PVC, 1/8"NPSF female, with cone valve	0.44	F40-2.30.04UV
A	Suction cup F40-2 Silicone, 1/8"NPSF female	0.40	F40-2.20.04AA
A	Suction cup F40-2 Silicone, 1/8"NPSF female, with mesh filter	0.40	F40-2.20.04AG
A	Suction cup F40-2 Silicone, 1/8"NPSF female, with dual flow control valve	0.40	F40-2.20.04DA
B	Suction cup F40-2 Silicone, G1/4" male, with mesh filter	0.44	F40-2.20.04AB
B	Suction cup F40-2 Silicone, G1/4" male, with mesh filter and dual flow control valve	0.44	F40-2.20.04DB
B	Suction cup F40-2 Silicone, 1/4" NPT male, with mesh filter	0.44	F40-2.20.04AC
B	Suction cup F40-2 Silicone, NPTG1/4" male, with dual flow control valve	0.44	F40-2.20.04DC
C	Suction cup F40-2 Silicone, G3/8" male, with mesh filter	0.54	F40-2.20.04AD

	Suction cups with fitting	Weight (oz)	Part No.
C	Suction cup F40-2 Silicone, G3/8" male, with mesh filter and dual flow control valve	0.54	F40-2.20.04DD
C	Suction cup F40-2 Silicone, 3/8" NPT male, with mesh filter	0.54	F40-2.20.04AE
C	Suction cup F40-2 Silicone, 3/8" NPT male, with dual flow control valve	0.54	F40-2.20.04DE
D	Suction cup F40-2 Silicone, 5x1/8"NPSF female	0.90	F40-2.20.04AF
D	Suction cup F40-2 Silicone, 5x1/8"NPSF female, with dual flow control valve	0.90	F40-2.20.04DF
E	Suction cup F40-2 Silicone, 1/8"NPSF female PA	0.27	F40-2.20.04AH
F	Suction cup F40-2 Silicone, 1/8"NPSF female, with cone valve	0.44	F40-2.20.04UV

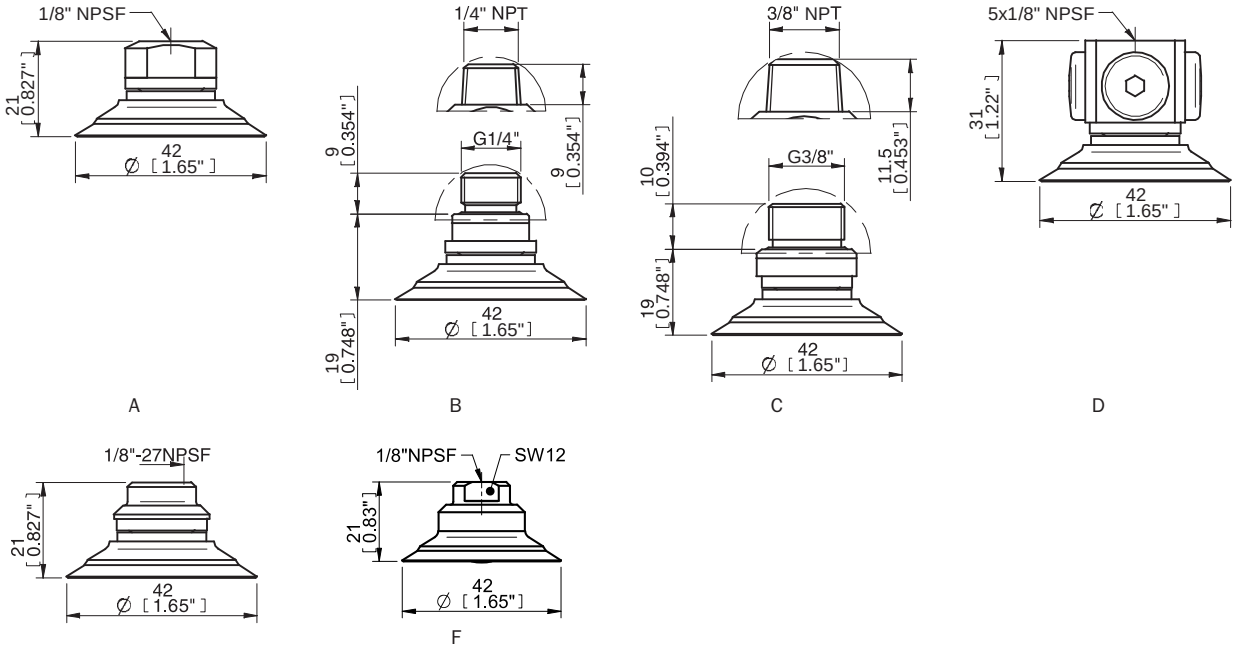

Rubber parts	Part No.
Suction cup F40-2 Nitrile-PVC	F40-2.30
Suction cup F40-2 Silicone	F40-2.20

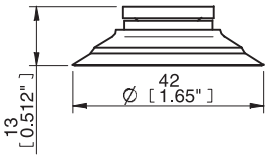

Fittings	Part No.
Fitting 1/8"NPSF female	04AA
Fitting 1/8"NPSF female, with mesh filter	04AG
Fitting 1/8"NPSF female, with dual flow control valve	04DA
Fitting 1/8"NPSF female, with cone valve	04UV
Fitting G1/4" male, with mesh filter	04AB
Fitting G1/4" male, with dual flow control valve	04DB
Fitting 1/4" NPT male, with mesh filter	04AC
Fitting 1/4" NPT male, with dual flow control valve	04DC
Fitting G3/8" male, with mesh filter	04AD
Fitting G3/8" male, with dual flow control valve	04DD
Fitting 3/8" NPT male, with mesh filter	04AE
Fitting 3/8" NPT male, with dual flow control valve	04DE
Fitting 5x1/8"NPSF female	04AF
Fitting 5x1/8"NPSF female, with dual flow control valve	04DF
Fitting 1/8"NPSF female, PA	04AH

Spare Part	Material	Temperature range °F	Part No.
Cone valve for F40-2	Al/SS/NBR	-40–230	31.50.056

F50-2

FLAT SUCTION CUP WITH CLEATS

- Suitable for flat objects.
- Good stability and little inherent movement.
- Recommended when the lifting force is parallel to the surface of the object.
- Cleats prevent thin, sensitive objects from being deformed and gives extra friction when the lifting force is parallel.

LIFTING FORCES & TECHNICAL DATA

Outer Dia	Lifting force vertical to the surface, lbf, at vacuum level			Lifting force parallel to the surface, lbf, at vacuum level			Volume	Min. curve radius	Max. vertical movement	Weight rubber part
in	6 -inHg	18 -inHg	27 -inHg	6 -inHg	18 -inHg	27 -inHg	in^3	in	in	oz
2.09	8.09	16.6	21.6	5.40	8.99	11.2	0.60	2.17	0.12	0.49

MATERIAL SPECIFICATIONS

Material	Color	Hardness, °Shore A	Temperature range, °F
Nitrile-PVC, NPV	Black	50	32–194
Silicone, SIL	Red	50	-40–392
HNBR	Grey-blue	75	-22–284*

** For a shorter period of time up to 320°F*

MATERIAL RESISTANCE

Material	Wear resistance	Oil	Weather & ozone	Hydrolysis	Gasoline	Concentrated acids	Alcohol	Oxidation
Nitrile-PVC, NPV	Excellent	Excellent	Good	Good	Excellent	Fair	Good	Good
Silicone, SIL	Good	Poor	Excellent	Fair	Poor	Poor	Good	Excellent
HNBR	Excellent	Excellent	Excellent	Good	Excellent	Fair	Good	Excellent

ORDERING INFORMATION

	Suction cups with fitting	Weight (oz)	Part No.
A	Suction cup F50-2 Nitrile-PVC, 1/8"NPSF female	0.84	F50-2.30.05AA
A	Suction cup F50-2 Nitrile-PVC, 1/8"NPSF female, with mesh filter	0.84	F50-2.30.05AG
A	Suction cup F50-2 Nitrile-PVC, 1/8"NPSF female, with dual flow control valve	0.84	F50-2.30.05DA
B	Suction cup F50-2 Nitrile-PVC, G1/4" male, with mesh filter	0.84	F50-2.30.05AB
B	Suction cup F50-2 Nitrile-PVC, G1/4" male, with mesh filter and dual flow control valve	0.84	F50-2.30.05DB
B	Suction cup F50-2 Nitrile-PVC, 1/4" NPT male, with mesh filter	0.84	F50-2.30.05AC
B	Suction cup F50-2 Nitrile-PVC, 1/4" NPT male, with dual flow control valve	0.84	F50-2.30.05DC
C	Suction cup F50-2 Nitrile-PVC, G3/8" male, with mesh filter	0.84	F50-2.30.05AD
C	Suction cup F50-2 Nitrile-PVC, G3/8" male, with mesh filter and dual flow control valve	0.84	F50-2.30.05DD
C	Suction cup F50-2 Nitrile-PVC, 3/8" NPT male, with mesh filter	0.84	F50-2.30.05AE
C	Suction cup F50-2 Nitrile-PVC, 3/8" NPT male, with dual flow control valve	0.84	F50-2.30.05DE
D	Suction cup F50-2 Nitrile-PVC, 5x1/8"NPSF female	1.55	F50-2.30.05AF
D	Suction cup F50-2 Nitrile-PVC, 5x1/8"NPSF female, with dual flow control valve	1.55	F50-2.30.05DF
E	Suction cup F50-2 Nitrile-PVC, 1/8" NPSF female, PA	0.69	F50-2.30.05CA
F	Suction cup F50-2 Nitrile-PVC, 1/8"NPSF female, with cone valve	1.02	F50-2.30.05UV
A	Suction cup F50-2 Silicone, 1/8"NPSF female	0.84	F50-2.20.05AA
A	Suction cup F50-2 Silicone, 1/8"NPSF female, with mesh filter	0.84	F50-2.20.05AG
A	Suction cup F50-2 Silicone, 1/8"NPSF female, with dual flow control valve	0.84	F50-2.20.05DA
B	Suction cup F50-2 Silicone, G1/4" male, with mesh filter	0.84	F50-2.20.05AB
B	Suction cup F50-2 Silicone, G1/4" male, with mesh filter and dual flow control valve	0.84	F50-2.20.05DB
B	Suction cup F50-2 Silicone, 1/4" NPT male, with mesh filter	0.84	F50-2.20.05AC
B	Suction cup F50-2 Silicone, 1/4" NPT male, with dual flow control valve	0.84	F50-2.20.05DC
C	Suction cup F50-2 Silicone, G3/8" male, with mesh filter	0.84	F50-2.20.05AD
C	Suction cup F50-2 Silicone, G3/8" male, with mesh filter and dual flow control valve	0.84	F50-2.20.05DD
C	Suction cup F50-2 Silicone, 3/8" NPT male, with mesh filter	0.84	F50-2.20.05AE
C	Suction cup F50-2 Silicone, 3/8" NPT male, with dual flow control valve	0.84	F50-2.20.05DE
D	Suction cup F50-2 Silicone, 5x1/8"NPSF female	1.55	F50-2.20.05AF
D	Suction cup F50-2 Silicone, 5x1/8"NPSF female, with dual flow control valve	1.55	F50-2.20.05DF
E	Suction cup F50-2 Silicone, 1/8" NPSF female, PA	0.69	F50-2.20.05CA
F	Suction cup F50-2 Silicone, 1/8"NPSF female, with cone valve	1.02	F50-2.20.05UV
A	Suction cup F50-2 HNBR, 1/8"NPSF female	0.84	F50-2.37.05AA

	Suction cups with fitting	Weight (oz)	Part No.
A	Suction cup F50-2 HNBR, 1/8"NPSF female with mesh filter	0.84	F50-2.37.05AG
A	Suction cup F50-2 HNBR, 1/8"NPSF female, with dual flow control valve	0.84	F50-2.37.05DA
B	Suction cup F50-2 HNBR, G1/4" male, with mesh filter	0.84	F50-2.37.05AB
B	Suction cup F50-2 HNBR, G1/4" male, with dual flow control valve	0.84	F50-2.37.05DB
B	Suction cup F50-2 HNBR, 1/4" NPT male, with mesh filter	0.84	F50-2.37.05AC
B	Suction cup F50-2 HNBR, 1/4" NPT male, with dual flow control valve	0.84	F50-2.37.05DC
C	Suction cup F50-2 HNBR, G3/8" male, with mesh filter	0.84	F50-2.37.05AD
C	Suction cup F50-2 HNBR, G3/8" male, with dual flow control valve	0.84	F50-2.37.05DD
C	Suction cup F50-2 HNBR, 3/8" NPT male, with mesh filter	0.84	F50-2.37.05AE
C	Suction cup F50-2 HNBR, 3/8" NPT male, with dual flow control valve	0.84	F50-2.37.05DE
D	Suction cup F50-2 HNBR, 5x1/8"NPSF female	1.55	F50-2.37.05AF
D	Suction cup F50-2 HNBR, 5x1/8"NPSF female, with dual flow control valve	1.55	F50-2.37.05DF
F	Suction cup F50-2 HNBR, 1/8"NPSF female, with cone valve	1.02	F50-2.37.05UV

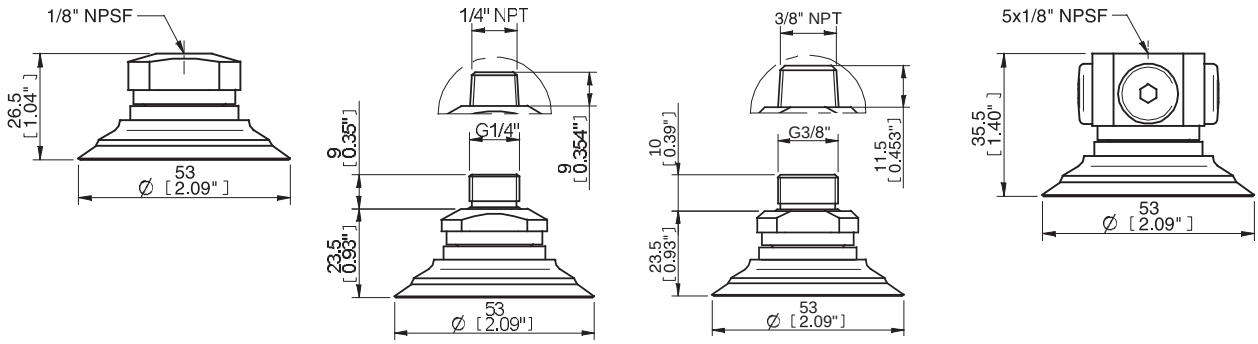

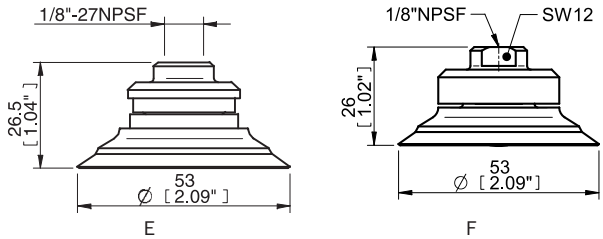

Rubber parts	Part No.
Suction cup F50-2 Nitrile-PVC	F50-2.30
Suction cup F50-2 Silicone	F50-2.20
Suction cup F50-2 HNBR	F50-2.37

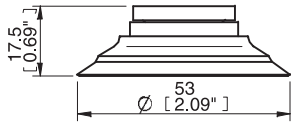

Fittings	Part No.
Fitting 1/8"NPSF female	05AA
Fitting 1/8"NPSF female, with mesh filter	05AG
Fitting 1/8"NPSF female, with dual flow control valve	05DA
Fitting 1/8"NPSF female, with cone valve	05UV
Fitting G1/4" male, with mesh filter	05AB
Fitting G1/4" male, with dual flow control valve	05DB
Fitting 1/4" NPT male, with mesh filter	05AC
Fitting 1/4" NPT male, with dual flow control valve	05DC
Fitting G3/8" male, with mesh filter	05AD
Fitting G3/8" male, with mesh filter and dual flow control valve	05DD
Fitting 3/8" NPT male, with mesh filter	05AE
Fitting 3/8" NPT male, with dual flow control valve	05DE
Fitting 5x1/8"NPSF female	05AF
Fitting 5x1/8"NPSF female, with dual flow control valve	05DF
Fitting 1/8"NPSF female, PA	05CA

Spare part	Material	Temperature range, °F	Part No.
Cone valve for F50-2	Al/SS/NBR	-40–230	31.50.057

F75

FLAT SUCTION CUP WITH CLEATS

- Suitable for flat objects.
- Good stability and little inherent movement.
- Recommended when the lifting force is parallel to the surface of the object.
- Cleats prevent thin, sensitive objects from being deformed and gives extra friction when the lifting force is parallel.

LIFTING FORCES & TECHNICAL DATA

Outer Dia	Lifting force vertical to the surface, lbf, at vacuum level			Lifting force parallel to the surface, lbf, at vacuum level			Volume	Min. curve radius	Max. vertical movement	Weight rubber part
in	6 -inHg	18 -inHg	27 -inHg	6 -inHg	18 -inHg	27 -inHg	in³	in	in	oz
3.03	18.0	45.0	60.7	13.5	24.7	31.5	1.20	5.91	0.12	0.81

MATERIAL SPECIFICATIONS

Material	Color	Hardness, °Shore A	Temperature range, °F
Nitrile-PVC, NPV	Black	50	32–194
Silicone, SIL	Red	50	-40–392
HNBR	Grey-blue	75	-22–284*

** For a shorter period of time up to 320°F*

MATERIAL RESISTANCE

Material	Wear resistance	Oil	Weather & ozone	Hydrolysis	Gasoline	Concentrated acids	Alcohol	Oxidation
Nitrile-PVC, NPV	Excellent	Excellent	Good	Good	Excellent	Fair	Good	Good
Silicone, SIL	Good	Poor	Excellent	Fair	Poor	Poor	Good	Excellent
HNBR	Excellent	Excellent	Excellent	Good	Excellent	Fair	Good	Excellent

ORDERING INFORMATION

	Suction cups with fitting	Weight (oz)	Part No.
A	Suction cup F75 Nitrile-PVC, 1/8"NPSF female Al, with mesh filter	2.80	F75.30.07UA
A	Suction cup F75 Nitrile-PVC, 3/8"NPSF female Al, with mesh filter	3.37	F75.30.07UB
A	Suction cup F75 Nitrile-PVC, G3/8" female PPS, with mesh filter	2.22	F75.30.07UC
A	Suction cup F75 Nitrile-PVC, G1/2" female Al, with mesh filter	3.24	F75.30.07UD
A	Suction cup F75 Nitrile-PVC, G1/2" female PPS, with mesh filter	2.01	F75.30.07UE
A	Suction cup F75 Nitrile-PVC, 1/8"NPSF female PPS, with mesh filter	2.02	F75.30.07UG
A	Suction cup F75 Nitrile-PVC, 1/4" NPT female Al, with mesh filter & 10-32 addl. conn.	3.52	F75.30.07UH
A	Suction cup F75 Nitrile-PVC, 1/8" NPT female Al, with mesh filter & 10-32 addl. conn.	2.86	F75.30.07UI
A	Suction cup F75 Nitrile-PVC, 3/8"NPSF female PPS, with mesh filter	2.22	F75.30.07UU
B	Suction cup F75 Nitrile-PVC, 1/8"NPSF female, clamp ring with mesh filter	3.28	F75.30.07NA
B	Suction cup F75 Nitrile-PVC, G3/8" female, clamp ring with mesh filter	3.28	F75.30.07ND
B	Suction cup F75 Nitrile-PVC, G3/8" female, with cone valve	3.46	F75.30.07VD
B	Suction cup F75 Nitrile-PVC, 3/8"NPSF female, with mesh filter	3.28	F75.30.07NE
B	Suction cup F75 Nitrile-PVC, G1/2" female, with mesh filter	3.28	F75.30.07NF
B	Suction cup F75 Nitrile-PVC, G1/2" female, with cone valve	3.46	F75.30.07VF
A	Suction cup F75 Silicone, 1/8"NPSF female Al, with mesh filter	2.80	F75.20.07UA
A	Suction cup F75 Silicone, 3/8"NPSF female Al, with mesh filter	3.37	F75.20.07UB
A	Suction cup F75 Silicone, G3/8" female PPS, with mesh filter	2.22	F75.20.07UC
A	Suction cup F75 Silicone, G1/2" female Al, with mesh filter	3.24	F75.20.07UD
A	Suction cup F75 Silicone, G1/2" female PPS, with mesh filter	2.01	F75.20.07UE
A	Suction cup F75 Silicone, 1/8"NPSF female PPS, with mesh filter	2.02	F75.20.07UG
A	Suction cup F75 Silicone, 1/4" NPT female Al, with mesh filter & 10-32 addl. conn.	3.52	F75.20.07UH
A	Suction cup F75 Silicone, 1/8" NPT female Al, with mesh filter & 10-32 addl. conn.	2.86	F75.20.07UI
A	Suction cup F75 Silicone, 3/8"NPSF female PPS, with mesh filter	2.22	F75.20.07UU

	Suction cups with fitting	Weight (oz)	Part No.
B	Suction cup F75 Silicone, 1/8"NPSF female, with mesh filter	3.28	F75.20.07NA
B	Suction cup F75 Silicone, G3/8" female, with mesh filter	3.28	F75.20.07ND
B	Suction cup F75 Silicone, G3/8" female, with cone valve	3.46	F75.20.07VD
B	Suction cup F75 Silicone, 3/8"NPSF female, with mesh filter	3.28	F75.20.07NE
B	Suction cup F75 Silicone, G1/2" female, with mesh filter	3.28	F75.20.07NF
B	Suction cup F75 Silicone, G1/2" female, with cone valve	3.46	F75.20.07VF
A	Suction cup F75 HNBR, 1/8"NPSF female Al, with mesh filter	2.80	F75.37.07UA
A	Suction cup F75 HNBR,NPSF female Al, with mesh filter	3.37	F75.37.07UB
A	Suction cup F75 HNBR, G3/8" female PPS, with mesh filter	2.22	F75.37.07UC
A	Suction cup F75 HNBR, G1/2" female Al, with mesh filter	3.24	F75.37.07UD
A	Suction cup F75 HNBR, G1/2" female PPS, with mesh filter	2.01	F75.37.07UE
A	Suction cup F75 HNBR, 1/8"NPSF female PPS, with mesh filter	2.02	F75.37.07UG
A	Suction cup F75 HNBR, 1/4" NPT female Al, with mesh filter & 10-32 addl. conn.	3.52	F75.37.07UH
A	Suction cup F75 HNBR, 1/8" NPT female Al, with mesh filter & 10-32 addl. conn.	2.86	F75.37.07UI
A	Suction cup F75 HNBR, 3/8"NPSF female PPS, with mesh filter	2.22	F75.37.07UU
B	Suction cup F75 HNBR, 1/8"NPSF female, with mesh filter	3.28	F75.37.07NA
B	Suction cup F75 HNBR, G3/8" female, with mesh filter	3.28	F75.37.07ND
B	Suction cup F75 HNBR G3/8" female, with cone valve	3.46	F75.37.07VD
B	Suction cup F75 HNBR, 3/8"NPSF female, with mesh filter	3.28	F75.37.07NE
B	Suction cup F75 HNBR, G1/2" female, with mesh filter	3.28	F75.37.07NF
B	Suction cup F75 HNBR, G1/2" female, with cone valve	3.46	F75.37.07VF

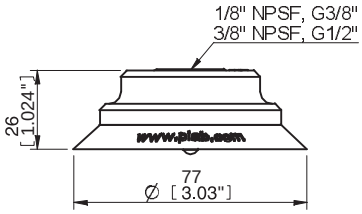

A

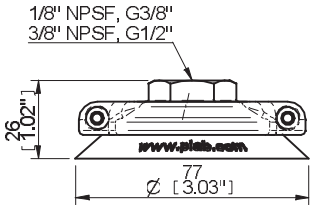

B

Rubber parts	Part No.
Suction cup F75 Nitrile-PVC	F75.30
Suction cup F75 Nitrile-PVC with washer	F75.30.W
Suction cup F75 Silicone	F75.20
Suction cup F75 Silicone with washer	F75.20.W
Suction cup F75 HNBR	F75.37
Suction cup F75 HNBR with washer	F75.37.W

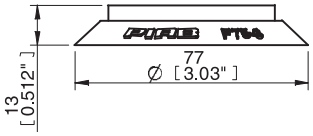

Fittings	Part No.
Fitting 1/8"NPSF female Al, with mesh filter	07UA
Fitting 3/8"NPSF female Al, with mesh filter	07UB
Fitting G3/8" female PPS, with mesh filter	07UC
Fitting G1/2" female Al, with mesh filter	07UD
Fitting G1/2" female PPS, with mesh filter	07UE
Fitting 1/8"NPSF female PPS, with mesh filter	07UG
Fitting 1/4" NPT female Al, with mesh filter & 10-32 addl. conn.	07UH
Fitting 1/8" NPT female Al, with mesh filter & 10-32 addl. conn.	07UI
Fitting 3/8"NPSF female PPS, with mesh filter	07UU
Fitting 1/8"NPSF female, clamp ring with mesh filter	07NA
Fitting G3/8" female, clamp ring with mesh filter	07ND
Fitting G3/8" female, with cone valve	07VD
Fitting 3/8"NPSF female, with mesh filter	07NE
Fitting G1/2" female, clamp ring with mesh filter	07NF
Fitting G1/2" female, with cone valve	07VF

Spare part	Material	Temperature range, °F	Part No.
Cone valve for F75	Al/SS/NBR	-40–230	32.50.038

F110

FLAT SUCTION CUP WITH CLEATS

- Suitable for flat objects.
- Good stability and little inherent movement.
- Recommended when the lifting force is parallel to the surface of the object.
- Cleats prevent thin, sensitive objects from being deformed and gives extra friction when the lifting force is parallel.

LIFTING FORCES & TECHNICAL DATA

Outer Dia	Lifting force vertical to the surface, lbf, at vacuum level			Lifting force parallel to the surface, lbf, at vacuum level			Volume	Min. curve radius	Max. vertical movement	Weight rubber part
in	6 -inHg	18 -inHg	27 -inHg	6 -inHg	18 -inHg	27 -inHg	in^3	in	in	oz
4.41	31.5	94.4	126	31.5	56.2	67.4	4.30	9.84	0.16	2.33

MATERIAL SPECIFICATIONS

Material	Color	Hardness °Shore A	Temperature range °F
Nitrile-PVC, NPV	Black	50	32–194
Silicone, SIL	Red	50	-40–392
HNBR	Grey-blue	75	-22–284*

** For a shorter period of time up to 320 °F*

MATERIAL RESISTANCE

Material	Wear resistance	Oil	Weather & ozone	Hydrolysis	Gasoline	Concentrated acids	Alcohol	Oxidation
Nitrile-PVC, NPV	Excellent	Excellent	Good	Good	Excellent	Fair	Good	Good
Silicone, SIL	Good	Poor	Excellent	Fair	Poor	Poor	Good	Excellent
HNBR	Excellent	Excellent	Excellent	Good	Excellent	Fair	Good	Excellent

ORDERING INFORMATION

	Suction cups with fitting	Weight (oz)	Part No.
A	Suction cup F110 Nitrile-PVC, G1/2" female Al, with mesh filter	7.14	F110.30.11UA
B	Suction cup F110 Nitrile-PVC, G3/8" female, clamp ring with mesh filter	10.2	F110.30.11NA
B	Suction cup F110 Nitrile-PVC, 3/8"NPSF female, clamp ring with mesh filter	10.2	F110.30.11NB
B	Suction cup F110 Nitrile-PVC, G1/2" female, clamp ring with mesh filter	10.2	F110.30.11NC
C	Suction cup F110 Nitrile-PVC, G1/2" female, clamp ring with cone valve	11.9	F110.30.11VC
A	Suction cup F110 Silicone, G1/2" female Al, with mesh filter	7.14	F110.20.11UA
B	Suction cup F110 Silicone, G3/8" female, clamp ring with mesh filter	10.2	F110.20.11NA
B	Suction cup F110 Silicone, 3/8"NPSF female, clamp ring with mesh filter	10.2	F110.20.11NB
B	Suction cup F110 Silicone, G1/2" female, clamp ring with mesh filter	10.2	F110.20.11NC
C	Suction cup F110 Silicone, G1/2" female, clamp ring with cone valve	11.9	F110.20.11VC
A	Suction cup F110 HNBR, G1/2" female Al, with mesh filter	7.14	F110.37.11UA
B	Suction cup F110 HNBR, G3/8" female, clamp ring with mesh filter	10.2	F110.37.11NA
B	Suction cup F110 HNBR, 3/8"NPSF female, clamp ring with mesh filter	10.2	F110.37.11NB
B	Suction cup F110 HNBR, G1/2" female, clamp ring with mesh filter	10.2	F110.37.11NC
C	Suction cup F110 HNBR, G1/2" female, clamp ring with cone valve	11.9	F110.37.11VC

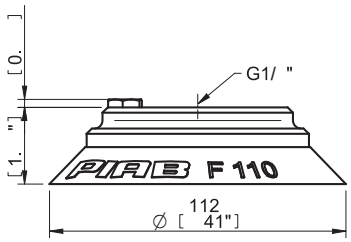

A

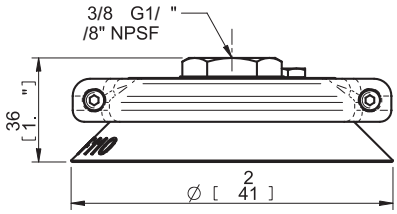

B

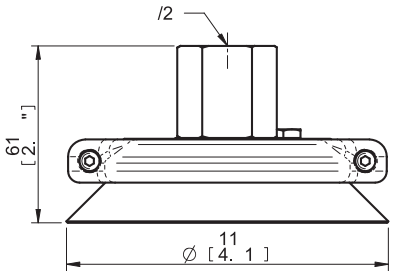

C

Rubber parts	Part No.
Suction cup F110 Nitrile-PVC	F110.30
Suction cup F110 Nitrile-PVC with washer	F110.30.W
Suction cup F110 Silicone	F110.20
Suction cup F110 Silicone with washer	F110.20.W
Suction cup F110 HNBR	F110.37
Suction cup F110 HNBR with washer	F110.37.W

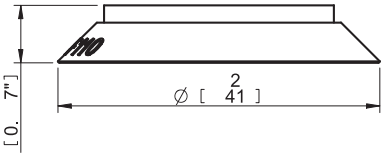

Fittings	Part No.
Fitting G1/2" female Al, with mesh filter	11UA
Fitting G3/8" female, clamp ring with mesh filter	11NA
Fitting 3/8" NPSF female, with mesh filter	11NB
Fitting G1/2" female, clamp ring with mesh filter	11NC
Fitting G1/2" female, clamp ring with cone valve	11VC

Spare part	Material	Temperature range °C	Part. No.
Cone valve for Fitting 110 & 150	Al/SS/NBR	-40–110	33.50.034

F150

FLAT SUCTION CUP WITH CLEATS

- Suitable for flat objects.
- Good stability and little inherent movement.
- Recommended when the lifting force is parallel to the surface of the object.
- Cleats prevent thin, sensitive objects from being deformed and gives extra friction when the lifting force is parallel.

LIFTING FORCES & TECHNICAL DATA

Outer Dia	Lifting force vertical to the surface, lbf, at vacuum level			Lifting force parallel to the surface, lbf at vacuum level			Volume	Min. curve radius	Max. vertical movement	Weight rubber part
in	6 -inHg	18 -inHg	27 -inHg	6 -inHg	18 -inHg	27 -inHg	in³	in	in	oz
5.98	67.4	191	247	56.2	135	180	9.80	19.7	0.24	7.05

MATERIAL SPECIFICATIONS

Material	Color	Hardness °Shore A	Temperature range °F
Nitrile-PVC, NPV	Black	50	32–194*
Silicone, SIL	Red	50	-40–392*

**Filter disk max. 176°F*

MATERIAL RESISTANCE

Material	Wear resistance	Oil	Weather & Ozone	Hydrolysis	Gasoline	Concentrated acids	Alcohol	Oxidation
Nitrile-PVC, NPV	Excellent	Excellent	Good	Good	Excellent	Fair	Good	Good
Silicone, SIL	Good	Poor	Excellent	Fair	Poor	Poor	Good	Excellent

ORDERING INFORMATION

	Suction cups with fitting	Weight (oz)	Part No.
A	Suction cup F150 Nitrile-PVC, G1/2" female Al, with mesh filter	16.8	F150.30.15UA
B	Suction cup F150 Nitrile-PVC, G3/4" female, clamp ring with mesh filter	19.6	F150.30.15NB
B	Suction cup F150 Nitrile-PVC, G1/2" female, clamp ring with mesh filter	19.6	F150.30.15NA
C	Suction cup F150 Nitrile-PVC, G1/2" female, clamp ring with cone valve	21.7	F150.30.15VA
A	Suction cup F150 Silicone, G1/2" female Al, with mesh filter	16.8	F150.20.15UA
B	Suction cup F150 Silicone, G3/4" female, clamp ring with mesh filter	19.6	F150.20.15NB
B	Suction cup F150 Silicone, G1/2" female, clamp ring with mesh filter	19.6	F150.20.15NA
C	Suction cup F150 Silicone, G1/2" female, clamp ring with cone valve	21.7	F150.20.15VA

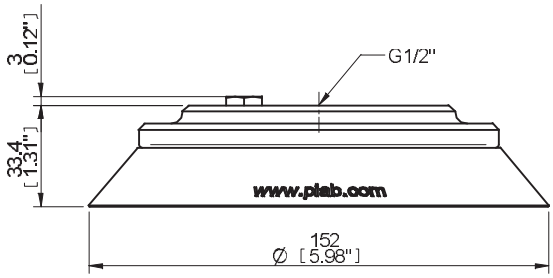

A

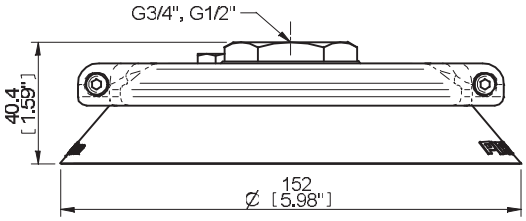

B

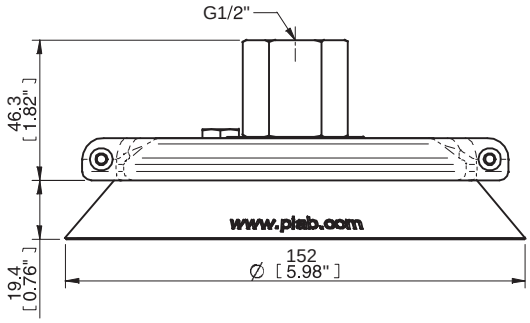

C

Rubber parts	Part No.
Suction cup F150 Nitrile-PVC	F150.30
Suction cup F150 Nitrile-PVC with washer	F150.30.W
Suction cup F150 Silicone	F150.20
Suction cup F150 Silicone with washer	F150.20.W

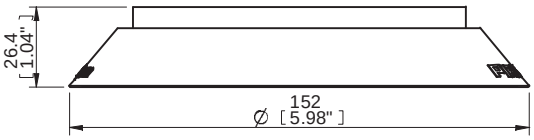

Fittings	Part No.
Fitting G1/2" female Al, with mesh filter	15UA
Fitting G1/2" female, clamp ring with mesh filter	15NA
Fitting G3/4" female, clamp ring with mesh filter	15NB
Fitting G1/2" female, clamp ring with cone valve	15VA

Spare part	Material	Temperature range °C	Part. No.
Cone valve for Fitting 110 & 150	Al/SS/NBR	-40–110	33.50.034

F15MF

FLAT SUCTION CUP WITH CLEATS, MARK FREE

- Suction cup of TPU, a mark free material that leaves no trace on the object being handled.
- Suitable for flat surfaces.
- Good stability and little inherent movement.
- Recommended when the lifting force is parallel to the surface of the object.

LIFTING FORCES & TECHNICAL DATA

Outer Dia	Lifting force vertical to the surface, lbf, at vacuum level			Lifting force parallel to the surface, lbf, at vacuum level			Volume	Min. curve radius	Max. vertical movement	Weight rubber part
in	6 -inHg	18 -inHg	27 -inHg	6 -inHg	18 -inHg	27 -inHg	in³	in	in	oz
0.62	0.90	1.80	2.70	1.01	2.02	3.26	0.02	0.67	0.04	0.03

MATERIAL SPECIFICATIONS

Material	Color	Hardness °Shore A	Temperature range °F
Thermoelastic polyurethane, TPU	Transparent white	81	-4-176

MATERIAL RESISTANCE

Wear resistance	Oil	Weather & Ozone	Hydrolysis	Gasoline	Concentrated acids	Alcohol	Oxidation
Excellent	Excellent	Excellent	Poor	Poor	Poor	Good	Good

ORDERING INFORMATION

Suction cups with fitting	Weight (oz)	Part No.
Suction cup F15MF Thermoelastic polyurethane, M5 male	0.17	F15MF.40.01AC

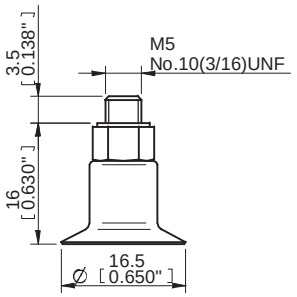

Rubber parts	Part No.
Suction cup F15MF Thermoelastic polyurethane	F15MF.40

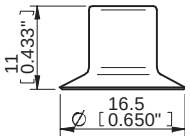

Fittings	Part No.
Fitting M5 male	01AC

F20MF

FLAT SUCTION CUP WITH CLEATS, MARK FREE

- Suction cup of TPU, a mark free material that leaves no trace on the object being handled.
- Suitable for flat surfaces.
- Good stability and little inherent movement.
- Recommended when the lifting force is parallel to the surface of the object.

LIFTING FORCES & TECHNICAL DATA

Outer Dia	Lifting force vertical to the surface, lbf, at vacuum level			Lifting force parallel to the surface, lbf, at vacuum level			Volume	Min. curve radius	Max. vertical movement	Weight rubber part
in	6 -inHg	18 -inHg	27 -inHg	6 -inHg	18 -inHg	27 -inHg	in³	in	in	oz
0.87	0.81	3.26	4.95	1.80	3.26	4.76	0.06	0.71	0.08	0.04

MATERIAL SPECIFICATIONS

Material	Color	Hardness, °Shore A	Temperature range, °F
Thermoelastic polyurethane, TPU	Transparent white	81	-4-176

MATERIAL RESISTANCE

Wear resistance	Oil	Weather & Ozone	Hydrolysis	Gasoline	Concentrated acids	Alcohol	Oxidation
Excellent	Excellent	Excellent	Poor	Poor	Poor	Good	Good

ORDERING INFORMATION

	Suction cups with fitting	Weight (oz)	Part No.
A	Suction cup F20MF Thermoelastic polyurethane, M5 female	0.15	F20MF.40.02AA
A	Suction cup F20MF Thermoelastic polyurethane, M5 female, with dual flow control valve	0.15	F20MF.40.02DA
B	Suction cup F20MF Thermoelastic polyurethane, G1/8" male, with mesh filter	0.15	F20MF.40.02AB
B	Suction cup F20MF Thermoelastic polyurethane, G1/8" male, with mesh filter and dual flow control valve	0.15	F20MF.40.02DB
B	Suction cup F20MF Thermoelastic polyurethane, 1/8" NPT male with mesh filter	0.15	F20MF.40.02AC
B	Suction cup F20MF Thermoelastic polyurethane, 1/8" NPT male, with dual flow control valve	0.15	F20MF.40.02DC
C	Suction cup F20MF Thermoelastic polyurethane, G1/8" male / M5 female	0.09	F20MF.40.02AD
C	Suction cup F20MF Thermoelastic polyurethane, G1/8" male / M5 female, with mesh filter	0.09	F20MF.40.02AF
C	Suction cup F20MF Thermoelastic polyurethane, G1/8" male / M5 fem., with dual flow control valve	0.09	F20MF.40.02DD
D	Suction cup F20MF Thermoelastic polyurethane, 5xM5 female	0.37	F20MF.40.02AE
D	Suction cup F20MF Thermoelastic polyurethane, 5xM5 female, with dual flow control valve	0.37	F20MF.40.02DE

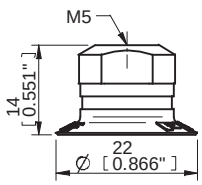

A

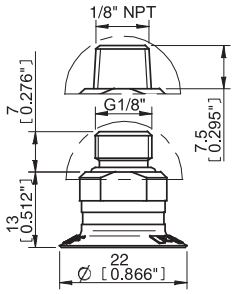

B

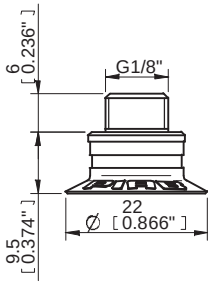

C

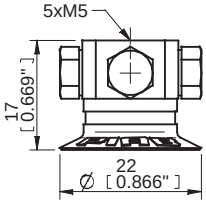

D

Rubber parts	Part No.
Suction cup F20MF Thermoelastic polyurethane	F20MF.40

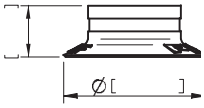

Fittings	Part No.
Fitting M5 female	02AA
Fitting M5 female, with dual flow control valve	02DA
Fitting G1/8" male, with mesh filter	02AB
Fitting G1/8" male, with mesh filter and dual flow control valve	02DB
Fitting 1/8" NPT male, with mesh filter	02AC
Fitting 1/8" NPT male, with dual flow control valve	02DC
Fitting G1/8" male/M5 female	02AD
Fitting G1/8" male/M5 female, with mesh filter	02AF
Fitting G1/8" male/M5 female, with dual flow control valve	02DD
Fitting 5xM5 female	02AE
Fitting 5xM5 female, with dual flow control valve	02DE

F25MF

FLAT SUCTION CUP WITH CLEATS, MARK FREE

- Suction cup of TPU, a mark free material that leaves no trace on the object being handled.
- Suitable for flat surfaces.
- Good stability and little inherent movement.
- Recommended when the lifting force is parallel to the surface of the object.

LIFTING FORCES & TECHNICAL DATA

Outer Dia	Lifting force vertical to the surface, lbf, at vacuum level			Lifting force parallel to the surface, lbf, at vacuum level			Volume	Min. curve radius	Max. vertical movement	Weight rubber part
in	6 -inHg	18 -inHg	27 -inHg	6 -inHg	18 -inHg	27 -inHg	in³	in	in	oz
1.06	1.42	5.51	7.98	2.02	5.51	8.16	0.07	0.90	0.06	0.06

MATERIAL SPECIFICATIONS

Material	Color	Hardness °Shore A	Temperature range °F
Thermoelastic polyurethane, TPU	Transparent white	81	-4-176

MATERIAL RESISTANCE

Wear resistance	Oil	Weather & Ozone	Hydrolysis	Gasoline	Concentrated acids	Alcohol	Oxidation
Excellent	Excellent	Excellent	Poor	Poor	Poor	Good	Good

ORDERING INFORMATION

	Suction cups with fitting	Weight (oz)	Part No.
A	Suction cup F25MF Thermoelastic polyurethane, M5 female	0.17	F25MF.40.02AA
A	Suction cup F25MF Thermoelastic polyurethane, M5 female, with dual flow control valve	0.17	F25MF.40.02DA
B	Suction cup F25MF Thermoelastic polyurethane, G1/8" male, with mesh filter	0.17	F25MF.40.02AB
B	Suction cup F25MF Thermoelastic polyurethane, G1/8" male, with mesh filter and dual flow control valve	0.17	F25MF.40.02DB
B	Suction cup F25MF Thermoelastic polyurethane, 1/8" NPT male, with mesh filter	0.17	F25MF.40.02AC
B	Suction cup F25MF Thermoelastic polyurethane, 1/8" NPT male, with dual flow control valve	0.17	F25MF.40.02DC
C	Suction cup F25MF Thermoelastic polyurethane, G1/8" male/M5 female	0.13	F25MF.40.02AD
C	Suction cup F25MF Thermoelastic polyurethane, G1/8" male/M5 female, with mesh filter	0.13	F25MF.40.02AF
C	Suction cup F25MF Thermoelastic polyurethane, G1/8" male/M5 fem., with dual flow control valve	0.13	F25MF.40.02DD
D	Suction cup F25MF Thermoelastic polyurethane, 5xM5 female	0.41	F25MF.40.02AE
D	Suction cup F25MF Thermoelastic polyurethane, 5xM5 female, with dual flow control valve	0.41	F25MF.40.02DE

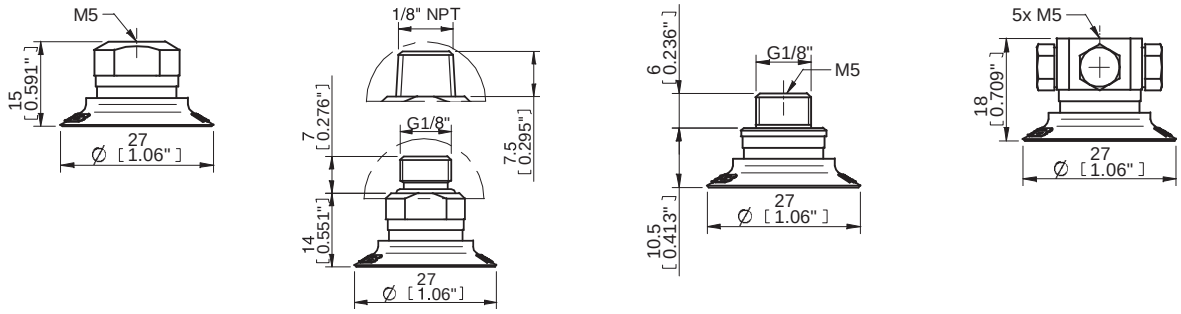

A B C D

Rubber parts	Part No.
Suction cup F25MF Thermoelastic polyurethane	F25MF.40

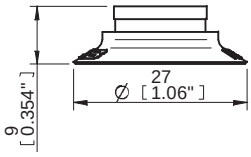

Fittings	Part No.
Fitting M5 female	02AA
Fitting M5 female, with dual flow control valve	02DA
Fitting G1/8" male, with mesh filter	02AB
Fitting G1/8" male, with mesh filter and dual flow control valve	02DB
Fitting 1/8" NPT male, with mesh filter	02AC
Fitting 1/8" NPT male, with dual flow control valve	02DC
Fitting G1/8" male/M5 female	02AD
Fitting G1/8" male/M5 female, with mesh filter	02AF
Fitting G1/8" male/M5 female, with dual flow control valve	02DD
Fitting 5xM5 female	02AE
Fitting 5xM5 female, with dual flow control valve	02DE

F30MF

FLAT SUCTION CUP WITH CLEATS, MARK FREE

- Suction cup of TPU, a mark free material that leaves no trace on the object being handled.
- Suitable for flat surfaces.
- Good stability and little inherent movement.
- Recommended when the lifting force is parallel to the surface of the object.

LIFTING FORCES & TECHNICAL DATA

Outer Dia	Lifting force vertical to the surface, lbf, at vacuum level			Lifting force parallel to the surface, lbf, at vacuum level			Volume	Min. curve radius	Max. vertical movement	Weight rubber part
in	6 -inHg	18 -inHg	27 -inHg	6 -inHg	18 -inHg	27 -inHg	in³	in	in	oz
1.26	2.47	7.76	10.8	3.06	6.29	9.44	0.12	1.70	0.06	0.08

MATERIAL SPECIFICATIONS

Material	Color	Hardness °Shore A	Temperature range °F
Thermoelastic polyurethane, TPU	Transparent white	81	-4-176

MATERIAL RESISTANCE

Wear resistance	Oil	Weather & Ozone	Hydrolysis	Gasoline	Concentrated acids	Alcohol	Oxidation
Excellent	Excellent	Excellent	Poor	Poor	Poor	Good	Good

ORDERING INFORMATION

	Suction cups with fitting	Weight (oz)	Part No.
A	Suction cup F30MF Thermoelastic polyurethane, M5 female	0.19	F30MF.40.02AA
A	Suction cup F30MF Thermoelastic polyurethane, M5 female, with dual flow control valve	0.19	F30MF.40.02DA
B	Suction cup F30MF Thermoelastic polyurethane, G1/8" male, with mesh filter	0.19	F30MF.40.02AB
B	Suction cup F30MF Thermoelastic polyurethane, G1/8" male, with mesh filter and dual flow control valve	0.19	F30MF.40.02DB
B	Suction cup F30MF Thermoelastic polyurethane, 1/8" NPT male, with mesh filter	0.19	F30MF.40.02AC
B	Suction cup F30MF Thermoelastic polyurethane, 1/8" NPT male, with dual flow control valve	0.19	F30MF.40.02DC
C	Suction cup F30MF Thermoelastic polyurethane, G1/8" male/M5 female	0.15	F30MF.40.02AD
C	Suction cup F30MF Thermoelastic polyurethane, G1/8" male/M5 female, with mesh filter	0.15	F30MF.40.02AF
C	Suction cup F30MF Thermoelastic polyurethane, G1/8" male/M5 fem., with dual flow control valve	0.15	F30MF.40.02DD
D	Suction cup F30MF Thermoelastic polyurethane, 5xM5 female	0.43	F30MF.40.02AE
D	Suction cup F30MF Thermoelastic polyurethane, 5xM5 female, with dual flow control valve	0.43	F30MF.40.02DE

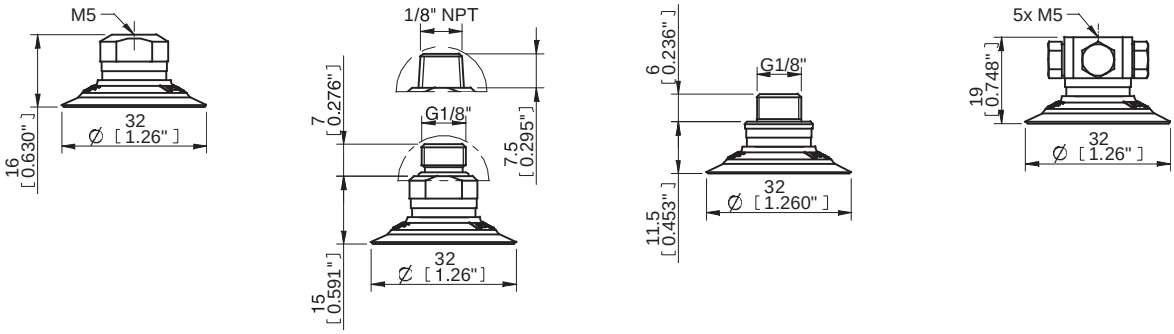

A B C D

Rubber parts	Part No.
Suction cup F30MF Thermoelastic polyurethane	F30MF.40

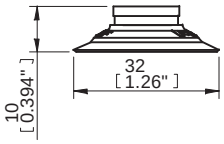

Fittings	Part No.
Fitting M5 female	02AA
Fitting M5 female, with dual flow control valve	02DA
Fitting G1/8" male, with mesh filter	02AB
Fitting G1/8" male, with mesh filter and dual flow control valve	02DB
Fitting 1/8" NPT male, with mesh filter	02AC
Fitting 1/8" NPT male, with dual flow control valve	02DC
Fitting G1/8" male/M5 female	02AD
Fitting G1/8" male/M5 female, with mesh filter	02AF
Fitting G1/8" male/M5 female, with dual flow control valve	02DD
Fitting 5xM5 female	02AE
Fitting 5xM5 female, with dual flow control valve	02DE

F40MF

FLAT SUCTION CUP WITH CLEATS, MARK FREE

- Suction cup of TPU, a mark free material that leaves no trace on the object being handled.
- Suitable for flat surfaces.
- Good stability and little inherent movement.
- Recommended when the lifting force is parallel to the surface of the object.

LIFTING FORCES & TECHNICAL DATA

Outer Dia	Lifting force vertical to the surface, lbf, at vacuum level			Lifting force parallel to the surface, lbf, at vacuum level			Volume	Min. curve radius	Max. vertical movement	Weight rubber part
in	6 -inHg	18 -inHg	27 -inHg	6 -inHg	18 -inHg	27 -inHg	in^3	in	in	oz
1.65	4.05	12.8	18.7	3.60	11.0	12.8	0.29	2.40	0.08	0.21

MATERIAL SPECIFICATIONS

Material	Color	Hardness °Shore A	Temperature range °F
Thermoelastic polyurethane, TPU	Transparent white	81	-4-176

MATERIAL RESISTANCE

Wear resistance	Oil	Weather & Ozone	Hydrolysis	Gasoline	Concentrated acids	Alcohol	Oxidation
Excellent	Excellent	Excellent	Poor	Poor	Poor	Good	Good

ORDERING INFORMATION

	Suction cups with fitting	Weight (oz)	Part No.
A	Suction cup F40MF Thermoelastic polyurethane, 1/8"NPSF female	0.42	F40MF.40.04AA
A	Suction cup F40MF Thermoelastic polyurethane, 1/8"NPSF female, with mesh filter	0.42	F40MF.40.04AG
A	Suction cup F40MF Thermoelastic polyurethane, 1/8"NPSF female, with dual flow control valve	0.42	F40MF.40.04DA
B	Suction cup F40MF Thermoelastic polyurethane, G1/4" male, with mesh filter	0.46	F40MF.40.04AB
B	Suction cup F40MF Thermoelastic polyurethane, G1/4" male, with dual flow control valve	0.46	F40MF.40.04DB
B	Suction cup F40MF Thermoelastic polyurethane, 1/4" NPT male, with mesh filter	0.46	F40MF.40.04AC
B	Suction cup F40MF Thermoelastic polyurethane, 1/4" NPT male, with dual flow control valve	0.46	F40MF.40.04DC
C	Suction cup F40MF Thermoelastic polyurethane, G3/8" male, with mesh filter	0.56	F40MF.40.04AD
C	Suction cup F40MF Thermoelastic polyurethane, G3/8" male, with dual flow control valve	0.56	F40MF.40.04DD
C	Suction cup F40MF Thermoelastic polyurethane, 3/8" NPT male, with mesh filter	0.56	F40MF.40.04AE
C	Suction cup F40MF Thermoelastic polyurethane, 3/8" NPT male, with dual flow control valve	0.56	F40MF.40.04DE
D	Suction cup F40MF Thermoelastic polyurethane, 5x1/8"NPSF female	0.92	F40MF.40.04AF
D	Suction cup F40MF Thermoelastic polyurethane, 5x1/8"NPSF female, with dual flow control valve	0.92	F40MF.40.04DF

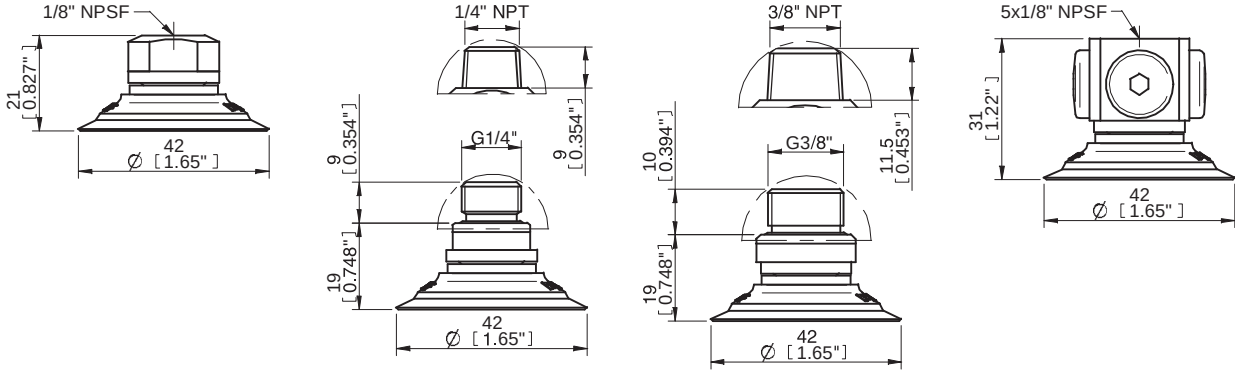

A B C D

Rubber parts	Part No.
Suction cup F40MF Thermoelastic polyurethane	F40MF.40

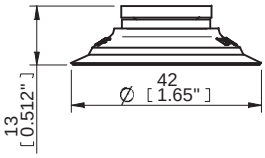

Fittings	Part No.
Fitting 1/8"NPSF female	04AA
Fitting 1/8"NPSF female, with mesh filter	04AG
Fitting 1/8"NPSF female, with dual flow control valve	04DA
Fitting G1/4" male, with mesh filter	04AB
Fitting G1/4" male, with dual flow control valve	04DB
Fitting 1/4" NPT male, with mesh filter	04AC
Fitting 1/4" NPT male, with dual flow control valve	04DC
Fitting G3/8" male, with mesh filter	04AD
Fitting G3/8" male, with dual flow control valve	04DD
Fitting 3/8" NPT male, with mesh filter	04AE
Fitting 3/8" NPT male, with dual flow control valve	04DE
Fitting 5x1/8"NPSF female	04AF
Fitting 5x1/8"NPSF female, with dual flow control valve	04DF

F50MF

FLAT SUCTION CUP WITH CLEATS, MARK FREE

- Suction cup of TPU, a mark free material that leaves no trace on the object being handled.
- Suitable for flat surfaces.
- Good stability and little inherent movement.
- Recommended when the lifting force is parallel to the surface of the object.

LIFTING FORCES & TECHNICAL DATA

Outer Dia	Lifting force vertical to the surface, lbf, at vacuum level			Lifting force parallel to the surface, lbf, at vacuum level			Volume	Min. curve radius	Max. vertical movement	Weight rubber part
in	6 -inHg	18 -inHg	27 -inHg	6 -inHg	18 -inHg	27 -inHg	in³	in	in	oz
2.09	5.51	20.7	31.0	6.97	18.4	24.1	0.61	3.70	0.08	0.46

MATERIAL SPECIFICATIONS

Material	Color	Hardness °Shore A	Temperature range °F
Thermoelastic polyurethane, TPU	Transparent white	81	-4-176

MATERIAL RESISTANCE

Wear resistance	Oil	Weather & Ozone	Hydrolysis	Gasoline	Concentrated acids	Alcohol	Oxidation
Excellent	Excellent	Excellent	Poor	Poor	Poor	Good	Good

ORDERING INFORMATION

	Suction cups with fitting	Weight (oz)	Part No.
A	Suction cup F50MF Thermoelastic polyurethane, 1/8"NPSF female	0.81	F50MF.40.05AA
A	Suction cup F50MF Thermoelastic polyurethane, 1/8"NPSF female, with mesh filter	0.81	F50MF.40.05AG
A	Suction cup F50MF Thermoelastic polyurethane, 1/8"NPSF female, with dual flow control valve	0.81	F50MF.40.05DA
B	Suction cup F50MF Thermoelastic polyurethane, G1/4" male, with mesh filter	0.81	F50MF.40.05AB
B	Suction cup F50MF Thermoelastic polyurethane, G1/4" male, with mesh filter and dual flow control valve	0.81	F50MF.40.05DB
B	Suction cup F50MF Thermoelastic polyurethane, 1/4" NPT male, with mesh filter	0.81	F50MF.40.05AC
B	Suction cup F50MF Thermoelastic polyurethane, 1/4" NPT male, with dual flow control valve	0.81	F50MF.40.05DC
C	Suction cup F50MF Thermoelastic polyurethane, G3/8" male, with mesh filter	0.81	F50MF.40.05AD
C	Suction cup F50MF Thermoelastic polyurethane, G3/8" male, with mesh filter and dual flow control valve	0.81	F50MF.40.05DD
C	Suction cup F50MF Thermoelastic polyurethane, 3/8" NPT male, with mesh filter	0.81	F50MF.40.05AE
C	Suction cup F50MF Thermoelastic polyurethane, 3/8" NPT male, with dual flow control valve	0.81	F50MF.40.05DE
D	Suction cup F50MF Thermoelastic polyurethane, 5x1/8"NPSF female	1.52	F50MF.40.05AF
D	Suction cup F50MF Thermoelastic polyurethane, 5x1/8"NPSF female, with dual flow control valve	1.52	F50MF.40.05DF

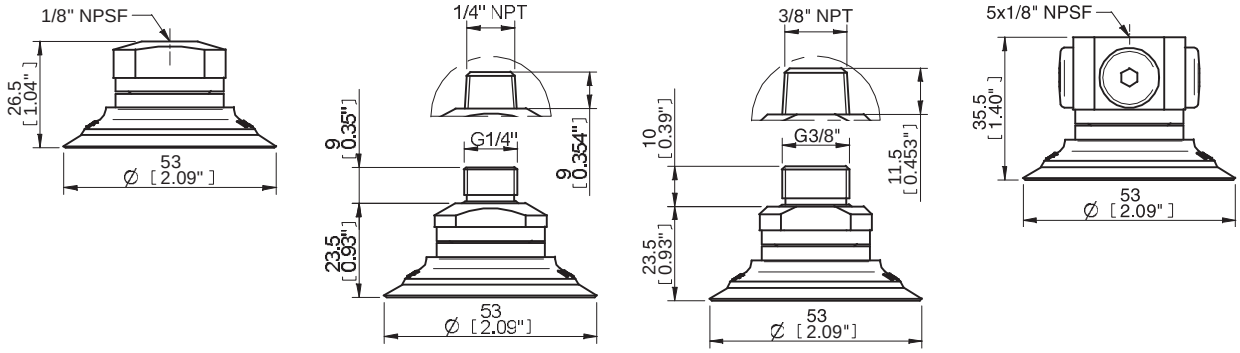

A B C D

Rubber parts	Part No.
Suction cup F50MF Thermoelastic polyurethane	F50MF.40

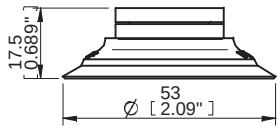

Fittings	Part No.
Fitting 1/8"NPSF female	05AA
Fitting 1/8"NPSF female, with mesh filter	05AG
Fitting 1/8"NPSF female, with dual flow control valve	05DA
Fitting G1/4" male, with mesh filter	05AB
Fitting G1/4" male, with dual flow control valve	05DB
Fitting 1/4" NPT male, with mesh filter	05AC
Fitting 1/4" NPT male, with dual flow control valve	05DC
Fitting G3/8" male, with mesh filter	05AD
Fitting G3/8" male, with mesh filter and dual flow control valve	05DD
Fitting 3/8" NPT male, with mesh filter	05AE
Fitting 3/8" NPT male, with dual flow control valve	05DE
Fitting 5x1/8"NPSF female	05AF
Fitting 5x1/8"NPSF female, with dual flow control valve	05DF

F75P

FLAT SUCTION CUP WITH CLEATS

- Suitable for flat and rough surfaces.
- Fair stability and little inherent movement.
- Recommended when the lifting force is parallel to the surface of the object.
- Dual hardness allowing strength and stability in conjunction with softness and flexibility.
- DURAFLEX® material features the elasticity of rubber in combination with the wear resistance of polyurethane.
- The DURAFLEX® material is mark-free.

LIFTING FORCES & TECHNICAL DATA

Material	Outer Dia	Lifting force vertical to the surface, lbf, at vacuum level			Lifting force parallel to the surface, lbf, at vacuum level			Volume	Min. curve radius	Max. vertical movement	Weight rubber parts
	in	6 -inHg	18 -inHg	27 -inHg	6 -inHg	18 -inHg	27 -inHg	in³	in	in	oz
PU30°/60°	3.03	15.7	43.4	61.4	9.89	39.6	69.2	1.16	5.91	0.08	0.99
PU60°	3.03	18.4	51.9	74.2	10.6	25.4	38.0	1.16	5.91	0.08	1.87

MATERIAL SPECIFICATIONS

Material	Color	Hardness °Shore A	Temperature range °F
Polyurethane, PU30/PU60	Yellow/Green transparent	30/60	50-122
Polyurethane, PU60	Green transparent	60	50-122

MATERIAL RESISTANCE

Wear resistance	Oil	Weather & ozone	Hydrolysis	Gasoline	Concentrated acids	Ethanol	Methanol	Oxidation
Excellent	Excellent	Excellent	Fair	Fair	Fair	Fair	Poor	Poor

ORDERING INFORMATION

	Suction cups with fitting	Weight (oz)	Part No.
A	Suction cup F75P Polyurethane 30/60, 1/8"NPSF female, with mesh filter	3.46	F75P.4K.07NA
A	Suction cup F75P Polyurethane 30/60, G3/8" female, with mesh filter	3.46	F75P.4K.07ND
A	Suction cup F75P Polyurethane 30/60, 3/8"NPSF female, with mesh filter	3.46	F75P.4K.07NE
A	Suction cup F75P Polyurethane 30/60, G1/2" female, with mesh filter	3.46	F75P.4K.07NF
A	Suction cup F75P Polyurethane 60, 1/8"NPSF female, with mesh filter	4.34	F75P.4E.07NA
A	Suction cup F75P Polyurethane 60, G3/8" female, with mesh filter	4.34	F75P.4E.07ND
A	Suction cup F75P Polyurethane 60, 3/8"NPSF female, with mesh filter	4.34	F75P.4E.07NE
A	Suction cup F75P Polyurethane 60, G1/2" female, with mesh filter	4.34	F75P.4E.07NF
B	Suction cup F75P Polyurethane 30/60, thread insert G3/8" male with mesh filter for Vacuum Gripper System (VGS)	2.05	F75P.5K.G40M
B	Suction cup F75P Polyurethane 60, thread insert G3/8" male, with mesh filter for Vacuum Gripper System (VGS)	2.05	F75P.5E.G40M
C	Suction cup F75P Polyurethane 30/60, brass 3/8"NPSF female	3.07	F75P.5K.N40W
C	Suction cup F75P Polyurethane 60, brass 3/8"NPSF female	3.10	F75P.5E.N40W

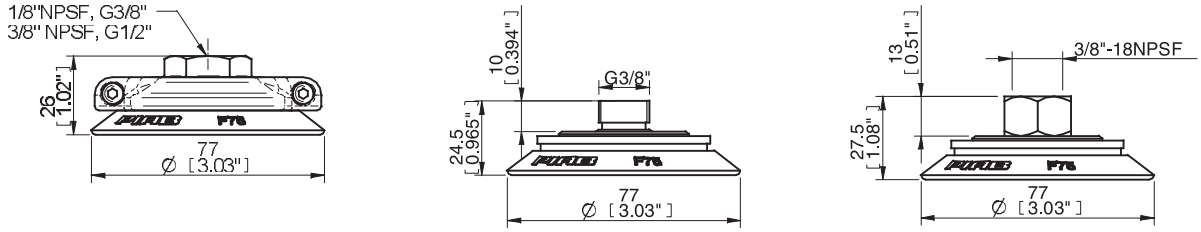

A B C

	Rubber parts	Part No.
A	Suction cup F75P Polyurethane 30/60	F75P.4K
A	Suction cup F75P Polyurethane 60	F75P.4E
B	Suction cup F75P Polyurethane 30/60 with collar for Vacuum Gripper System (VGS)	F75P.5K
B	Suction cup F75P Polyurethane 60 with collar for Vacuum Gripper System (VGS)	F75P.5E

A B

Fittings	Part No.
Fitting G3/8" female, with mesh filter	07ND
Fitting 1/8" NPSF female, with mesh filter	07NA
Fitting G1/2" female, with mesh filter	07NF
Fitting 3/8" NPSF female, with mesh filter	07NE
Thread insert G3/8" male, with O-ring and mesh filter for Vacuum Gripper System (VGS)	01.07.148

F110P

FLAT SUCTION CUP WITH CLEATS

- Suitable for flat and rough surfaces.
- Fair stability and little inherent movement.
- Recommended when the lifting force is parallel to the surface of the object.
- Dual hardness allowing strength and stability in conjunction with softness and flexibility.
- DURAFLEX® material features the elasticity of rubber in combination with the wear resistance of polyurethane.
- The DURAFLEX® material is mark-free.

LIFTING FORCES & TECHNICAL DATA

Material	Outer Dia	Lifting force vertical to the surface, lbf, at vacuum level			Lifting force parallel to the surface, lbf, at vacuum level			Volume	Min. curve radius	Max. vertical movement	Weight rubber parts
	in	6 -inHg	18 -inHg	27 -inHg	6 -inHg	18 -inHg	27 -inHg	in³	in	in	oz
PU30°/60°	4.53	37.5	97.1	133	33.5	99.1	139	3.66	9.84	0.16	2.89
PU60°	4.53	42.9	112	158	66.8	118	149	3.66	9.84	0.16	4.69

MATERIAL SPECIFICATIONS

Material	Color	Hardness °Shore A	Temperature range °F
Polyurethane, PU30/PU60	Yellow/Green transparent	30/60	50-122
Polyurethane, PU60	Green transparent	60	50-122

MATERIAL RESISTANCE

Wear resistance	Oil	Weather & ozone	Hydrolysis	Gasoline	Concentrated acids	Ethanol	Methanol	Oxidation
Excellent	Excellent	Excellent	Fair	Fair	Fair	Fair	Poor	Poor

ORDERING INFORMATION

	Suction cups with fitting	Weight (oz)	Part No.
A	Suction cup F110P Polyurethane 30/60, G3/8" female, with mesh filter	11.4	F110P.4K.11NA
A	Suction cup F110P Polyurethane 30/60, 3/8"NPSF female, with mesh filter	11.4	F110P.4K.11NB
A	Suction cup F110P Polyurethane 30/60, G1/2" female, with mesh filter	11.4	F110P.4K.11NC
A	Suction cup F110P Polyurethane 60, G3/8" female, with mesh filter	13.2	F110P.4E.11NA
A	Suction cup F110P Polyurethane 60, 3/8"NPSF female, with mesh filter	13.2	F110P.4E.11NB
A	Suction cup F110P Polyurethane 60, G1/2" female, with mesh filter	13.2	F110P.4E.11NC
B	Suction cup F110P Polyurethane 30/60, thread insert G3/8" with mesh filter for Vacuum Gripper System (VGS)	4.92	F110P.5K.G40M
B	Suction cup F110P Polyurethane 60, thread insert G3/8", with mesh filter for Vacuum Gripper System (VGS)	4.92	F110P.5E.G40M
C	Suction cup F110P Polyurethane 30/60, brass 3/8"NPSF female	5.93	F110P.5K.N40W
C	Suction cup F110P Polyurethane 60, brass 3/8"NPSF female	5.93	F110P.5E.N40W

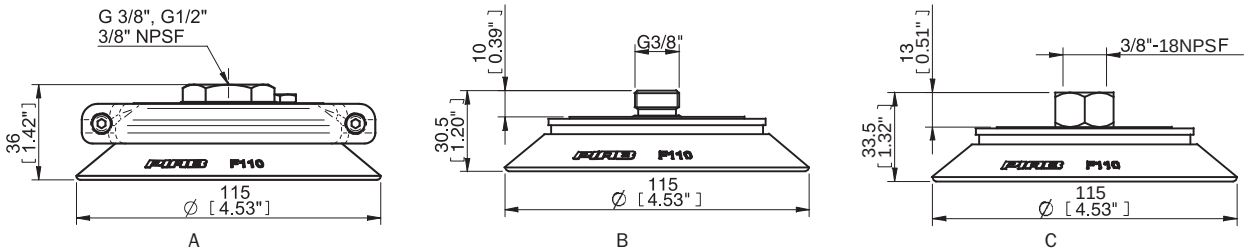

	Rubber parts	Part No.
A	Suction cup F110P Polyurethane 30/60	F110P.4K
A	Suction cup F110P Polyurethane 60	F110P.4E
B	Suction cup F110P Polyurethane 30/60 with collar for Vacuum Gripper System (VGS)	F110P.5K
B	Suction cup F110P Polyurethane 60 with collar for Vacuum Gripper System (VGS)	F110P.5E

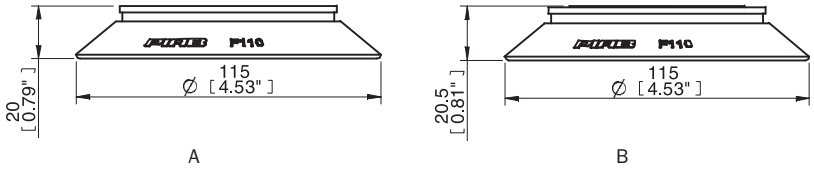

Fitting	Part No.
Fitting G3/8" female, with mesh filter	11NA
Fitting 3/8" NPSF female, with mesh filter	11NB
Fitting G1/2" female, with mesh filter	11NC
Thread insert G3/8" male, with O-ring and mesh filter for Vacuum Gripper System (VGS)	01.07.148

FC20P AND FC25P

FLAT, CONCAVE SUCTION CUP WITH CLEATS

- Suitable for lifting small objects and narrow parts, also slightly domed, flat and oily surfaces, e.g., such as those encountered when handling steel sheets in press processes
- Thanks to the high friction of the rubber material, the suction cups can withstand high forces at rapid accelerations in horizontal directions, even on oily surfaces.
- The suction cups have cleats that prevent thin objects from being disfigured.
- DURAFLEX® material features the elasticity of rubber in combination with the wear resistance of polyurethane.
- The DURAFLEX® material is mark-free.

LIFTING FORCES & TECHNICAL DATA

Model	Outer Dia	Lifting force vertical to the surface, lbf, at vacuum level			Lifting force parallel to the surface, lbf, at vacuum level			Volume	Min. curve radius	Max. vertical movement	Weight rubber part
	in	6 -inHg	18 -inHg	27 -inHg	6 -inHg	18 -inHg	27 -inHg	in³	in	in	oz
FC20P	0.87	1.01	2.70	3.60	1.01	2.02	2.70	0.06	0.98	0.07	0.05
FC25P	1.12	1.80	4.50	6.07	2.02	2.70	4.05	0.18	1.77	0.16	0.11

MATERIAL SPECIFICATIONS

Material	Color	Hardness °Shore A	Temperature range °F
Polyurethane, PU50	Blue transparent	50	50-122

MATERIAL RESISTANCE

Wear resistance	Oil	Weather & ozone	Hydrolysis	Gasoline	Concentrated acids	Ethanol	Methanol	Oxidation
Excellent	Excellent	Excellent	Fair	Fair	Fair	Fair	Poor	Poor

ORDERING INFORMATION

	Suction cups with fitting	Weight (oz)	Part No.
A	Suction cup FC20P Polyurethane 50, M5 female	0.16	FC20P.4D.02AA
A	Suction cup FC20P Polyurethane 50, M5 female, with dual flow control valve	0.16	FC20P.4D.02DA
B	Suction cup FC20P Polyurethane 50, G1/8" male, with mesh filter	0.16	FC20P.4D.02AB
B	Suction cup FC20P Polyurethane 50, G1/8" male, with dual flow control valve	0.16	FC20P.4D.02DB
B	Suction cup FC20P Polyurethane 50, 1/8" NPT male, with mesh filter	0.16	FC20P.4D.02AC
B	Suction cup FC20P Polyurethane 50, 1/8" NPT male, with dual flow control valve	0.16	FC20P.4D.02DC
C	Suction cup FC20P Polyurethane 50, G1/8" male / M5 female	0.12	FC20P.4D.02AD
C	Suction cup FC20P Polyurethane 50, G1/8" male / M5 female, with mesh filter	0.12	FC20P.4D.02AF
C	Suction cup FC20P Polyurethane 50, G1/8" male / M5 female, with dual flow conttrol valve	0.12	FC20P.4D.02DD
D	Suction cup FC20P Polyurethane 50, 5xM5 female	0.40	FC20P.4D.02AE
D	Suction cup FC20P Polyurethane 50, 5xM5 female, with dual flow control valve	0.40	FC20P.4D.02DE
E	Suction cup FC25P Polyurethane 50, M5 female	0.22	FC25P.4D.02AA
E	Suction cup FC25P Polyurethane 50, M5 female, with dual flow control valve	0.22	FC25P.4D.02DA
F	Suction cup FC25P Polyurethane 50, G1/8" male, with mesh filter	0.22	FC25P.4D.02AB
F	Suction cup FC25P Polyurethane 50, G1/8" male, with dual flow control valve	0.22	FC25P.4D.02DB
F	Suction cup FC25P Polyurethane 50, 1/8" NPT male, with mesh filter	0.22	FC25P.4D.02AC
F	Suction cup FC25P Polyurethane 50, 1/8" NPT male, with dual flow control valve	0.22	FC25P.4D.02DC
G	Suction cup FC25P Polyurethane 50, G1/8" male / M5 female	0.18	FC25P.4D.02AD
G	Suction cup FC25P Polyurethane 50, G1/8" male / M5 female, with mesh filter	0.18	FC25P.4D.02AF
G	Suction cup FC25P Polyurethane 50, G1/8" male / M5 female, with dual flow control valve	0.18	FC25P.4D.02DD

	Suction cups with fitting	Weight (oz)	Part No.
H	Suction cup FC25P Polyurethane 50, 5xM5 female	0.46	FC25P.4D.02AE
H	Suction cup FC25P Polyurethane 50, 5xM5 female, with dual flow control valve	0.46	FC25P.4D.02DE

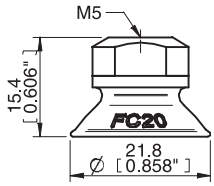

A

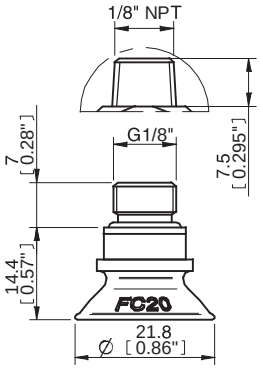

B

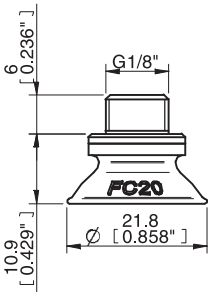

C

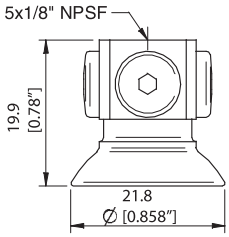

D

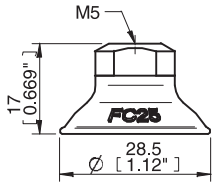

E

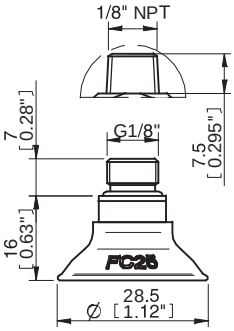

F

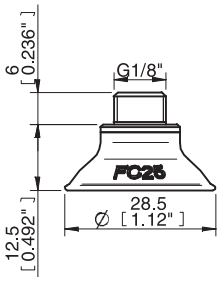

G

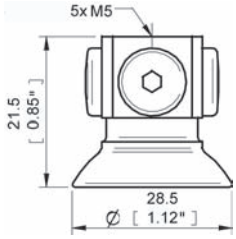

H

	Rubber part	Part No.
A	Suction cup FC20P Polyurethane 50	FC20P.4D
B	Suction cup FC25P Polyurethane 50	FC25P.4D

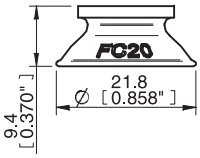

A

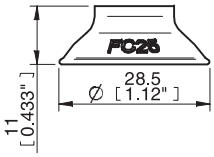

B

Fittings	Part No.
Fitting M5 female	02AA
Fitting M5 female, with dual flow control valve	02DA
Fitting G1/8" male, with mesh filter	02AB
Fitting G1/8" male, with mesh filter and dual flow control valve	02DB
Fitting 1/8" NPT male, with mesh filter	02AC
Fitting 1/8" NPT male, with dual flow control valve	02DC
Fitting G1/8" male/M5 female	02AD
Fitting G1/8" male/M5 female, with mesh filter	02AF
Fitting G1/8" male/M5 female, with dual flow control valve	02DD
Fitting 5xM5 female	02AE
Fitting 5xM5 female, with dual flow control valve	02DE

FC35P

FLAT, CONCAVE SUCTION CUP WITH CLEATS

- Suitable for slightly domed and flat and oily surfaces, e.g., such as those encountered when handling steel sheets in press processes.
- Thanks to the high friction of the rubber material, the suction cups can withstand high forces at rapid accelerations in horizontal directions, even on oily surfaces.
- The suction cups have cleats that prevent thin objects from being disfigured.
- DURAFLEX® material features the elasticity of rubber in combination with the wear resistance of polyurethane.
- The DURAFLEX® material is mark-free.

LIFTING FORCES & TECHNICAL DATA

Material	Outer Dia	Lifting force vertical to the surface, lbf, at vacuum level			Lifting force parallel to the surface, lbf, at vacuum level			Volume	Min. curve radius	Max. vertical movement	Weight rubber part
	in	6 -inHg	18 -inHg	27 -inHg	6 -inHg	18 -inHg	27 -inHg	in³	in	in	oz
PU50°	1.38	2.50	8.10	11.5	6.10	11.5	13.9	0.31	1.26	0.22	0.21
PU60°	1.38	2.50	7.60	11.0	6.10	9.20	11.5	0.31	1.26	0.22	0.21

MATERIAL SPECIFICATIONS

Material	Color	Hardness °Shore A	Temperature range °F
Polyurethane, PU50	Blue transparent	50	50–122
Polyurethane, PU60	Green transparent	60	50–122

MATERIAL RESISTANCE

Wear resistance	Oil	Weather & ozone	Hydrolysis	Gasoline	Concentrated acids	Ethanol	Methanol	Oxidation
Excellent	Excellent	Excellent	Fair	Fair	Fair	Fair	Poor	Poor

ORDERING INFORMATION

	Suction cups with fitting	Weight (oz)	Part No.
A	Suction cup FC35P Polyurethane 50, 1/8"NPSF female	0.42	FC35P.4D.04AA
A	Suction cup FC35P Polyurethane 50, 1/8"NPSF female, with mesh filter	0.42	FC35P.4D.04AG
A	Suction cup FC35P Polyurethane 50, 1/8"NPSF female, with dual flow control valve	0.42	FC35P.4D.04DA
B	Suction cup FC35P Polyurethane 50, G1/4" male, with mesh filter	0.46	FC35P.4D.04AB
B	Suction cup FC35P Polyurethane 50, G1/4" male, with dual flow control valve	0.46	FC35P.4D.04DB
B	Suction cup FC35P Polyurethane 50, 1/4" NPT male, with mesh filter	0.46	FC35P.4D.04AC
B	Suction cup FC35P Polyurethane 50, 1/4" NPT male, with dual flow control valve	0.46	FC35P.4D.04DC
C	Suction cup FC35P Polyurethane 50, G3/8" male, with mesh filter	0.56	FC35P.4D.04AD
C	Suction cup FC35P Polyurethane 50, G3/8" male, with dual flow control valve	0.56	FC35P.4D.04DD
C	Suction cup FC35P Polyurethane 50, 3/8" NPT male, with mesh filter	0.56	FC35P.4D.04AE
C	Suction cup FC35P Polyurethane 50, 3/8" NPT male, with dual flow control valve	0.56	FC35P.4D.04DE
D	Suction cup FC35P Polyurethane 50, 5x1/8"NPSF female	0.92	FC35P.4D.04AF
D	Suction cup FC35P Polyurethane 50, 5x1/8"NPSF female, with dual flow control valve	0.92	FC35P.4D.04DF
A	Suction cup FC35P Polyurethane 60, 1/8"NPSF female	0.42	FC35P.4E.04AA
A	Suction cup FC35P Polyurethane 60, 1/8"NPSF female, with mesh filter	0.42	FC35P.4E.04AG
A	Suction cup FC35P Polyurethane 60, 1/8"NPSF female, with dual flow control valve	0.42	FC35P.4E.04DA
B	Suction cup FC35P Polyurethane 60, G1/4" male, with mesh filter	0.46	FC35P.4E.04AB
B	Suction cup FC35P Polyurethane 60, G1/4" male, with dual flow control valve	0.46	FC35P.4E.04DB
B	Suction cup FC35P Polyurethane 60, 1/4" NPT male, with mesh filter	0.46	FC35P.4E.04AC
B	Suction cup FC35P Polyurethane 60, 1/4" NPT male, with dual flow control valve	0.46	FC35P.4E.04DC
C	Suction cup FC35P Polyurethane 60, G3/8" male, with mesh filter	0.56	FC35P.4E.04AD
C	Suction cup FC35P Polyurethane 60, G3/8" male, with dual flow control valve	0.56	FC35P.4E.04DD

	Suction cups with fitting	Weight (oz)	Part No.
C	Suction cup FC35P Polyurethane 60, 3/8" NPT male, with mesh filter	0.56	FC35P.4E.04AE
C	Suction cup FC35P Polyurethane 60, 3/8" NPT male, with dual flow control valve	0.56	FC35P.4E.04DE
D	Suction cup FC35P Polyurethane 60, 5x1/8"NPSF female	0.92	FC35P.4E.04AF
D	Suction cup FC35P Polyurethane 60, 5x1/8"NPSF female, with dual flow control valve	0.92	FC35P.4E.04DF

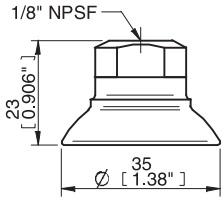

A

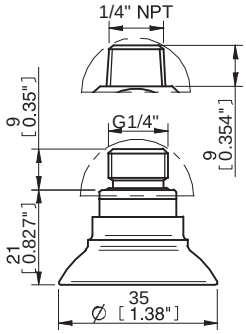

B

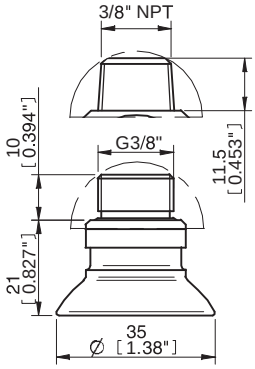

C

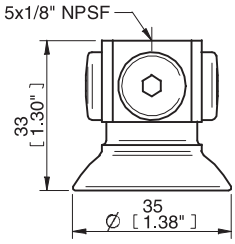

D

Rubber parts	Part No.
Suction cup FC35P Polyurethane 50	FC35P.4D
Suction cup FC35P Polyurethane 60	FC35P.4E

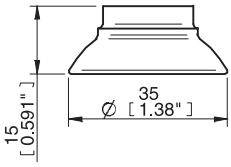

Fittings	Part No.
Fitting 1/8"NPSF female	04AA
Fitting 1/8"NPSF female, with mesh filter	04AG
Fitting 1/8"NPSF female, with dual flow control valve	04DA
Fitting G1/4" male, with mesh filter	04AB
Fitting G1/4" male, with dual flow control valve	04DB
Fitting 1/4" NPT male, with mesh filter	04AC
Fitting 1/4" NPT male, with dual flow control valve	04DC
Fitting G3/8" male, with mesh filter	04AD
Fitting G3/8" male, with dual flow control valve	04DD
Fitting 3/8" NPT male, with mesh filter	04AE
Fitting 3/8" NPT male, with dual flow control valve	04DE
Fitting 5x1/8"NPSF female	04AF
Fitting 5x1/8"NPSF female, with dual flow control valve	04DF
Fitting 1/8"NPSF female, PA	04AH

FC50P

FLAT, CONCAVE SUCTION CUP WITH CLEATS

- Suitable for slightly domed and flat and oily surfaces, e.g., such as those encountered when handling steel sheets in press processes.
- Thanks to the high friction of the rubber material, the suction cups can withstand high forces at rapid accelerations in horizontal directions, even on oily surfaces.
- The suction cups have cleats that prevent thin objects from being disfigured.
- DURAFLEX® material features the elasticity of rubber in combination with the wear resistance of polyurethane.
- The DURAFLEX® material is mark-free.

LIFTING FORCES & TECHNICAL DATA

Material	Outer Dia	Lifting force vertical to the surface, lbf, at vacuum level			Lifting force parallel to the surface, lbf, at vacuum level			Volume	Min. curve radius	Max. vertical movement	Weight with fitting
	in	6 -inHg	18 -inHg	27 -inHg	6 -inHg	18 -inHg	27 -inHg	in³	in	in	oz
PU40°	1.97	6.29	17.3	23.2	11.0	18.4	22.5	0.61	2.09	0.20	0.99
PU60°	1.97	6.29	17.3	23.4	11.7	20.9	25.0	0.61	2.09	0.20	0.99

MATERIAL SPECIFICATIONS

Material	Color	Hardness °Shore A	Temperature range °F
Polyurethane, PU40	Red transparent	40	50–122
Polyurethane, PU60	Green transparent	60	50–122

MATERIAL RESISTANCE

Wear resistance	Oil	Weather & ozone	Hydrolysis	Gasoline	Concentrated acids	Ethanol	Methanol	Oxidation
Excellent	Excellent	Excellent	Fair	Fair	Fair	Fair	Poor	Poor

ORDERING INFORMATION

Suction cups with fitting	Part No.
Suction cup FC50P Polyurethane 40, G3/8" male - 1/8"NPSF female	FC50P.4C.05UB
Suction cup FC50P Polyurethane 60, G3/8" male - 1/8"NPSF female	FC50P.4E.05UB

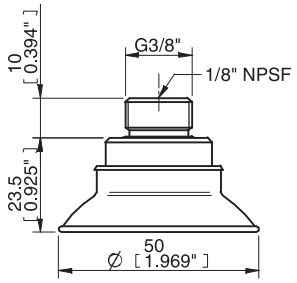

FC75P

FLAT, CONCAVE SUCTION CUP WITH CLEATS

- Suitable for slightly domed and flat and oily surfaces, e.g., such as those encountered when handling steel sheets in press processes.
- Thanks to the high friction of the rubber material, the suction cups can withstand high forces at rapid accelerations in horizontal directions, even on oily surfaces.
- The suction cups have cleats that prevent thin objects from being disfigured.
- DURAFLEX® material features the elasticity of rubber in combination with the wear resistance of polyurethane.
- The DURAFLEX® material is mark-free.

LIFTING FORCES & TECHNICAL DATA

Material	Outer Dia	Lifting force vertical to the surface, lbf, at vacuum level			Lifting force parallel to the surface, lbf, at vacuum level			Volume	Min. curve radius	Max. vertical movement
	in	6 -inHg	18 -inHg	27 -inHg	6 -inHg	18 -inHg	27 -inHg	in³	in	in
PU40°	2.95	16.4	35.3	48.3	24.1	45.0	51.7	1.83	3.07	0.26
PU60°	2.95	16.4	37.3	50.6	20.9	50.6	57.3	1.83	3.07	0.26

MATERIAL SPECIFICATIONS

Material	Color	Hardness °Shore A	Temperature range °F
Polyurethane, PU40	Red transparent	40	50–122
Polyurethane, PU60	Green transparent	60	50–122

MATERIAL RESISTANCE

Wear resistance	Oil	Weather & ozone	Hydrolysis	Gasoline	Concentrated acids	Ethanol	Methanol	Oxidation
Excellent	Excellent	Excellent	Fair	Fair	Fair	Fair	Poor	Poor

ORDERING INFORMATION

	Suction cups with fitting	Weight (oz)	Part No.
A	Suction cup FC75P Polyurethane 40, G3/8" male - 1/8"NPSF female	1.59	FC75P.4C.07UF
A	Suction cup FC75P Polyurethane 60, G3/8" male - 1/8"NPSF female	1.59	FC75P.4E.07UF
B	Suction cup FC75P Polyurethane 40, thread insert G3/8" with mesh filter for Vacuum Gripper System (VGS)	1.48	FC75P.5C.G40M
B	Suction cup FC75P Polyurethane 60, thread insert G3/8" with mesh filter for Vacuum Gripper System (VGS)	1.48	FC75P.5E.G40M
C	Suction cup FC75P Polyurethane 40, brass 3/8"NPSF female	2.50	FC75P.5C.N40W
C	Suction cup FC75P Polyurethane 60, brass 3/8"NPSF female	2.50	FC75P.5E.N40W

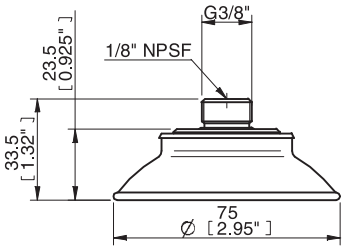

A

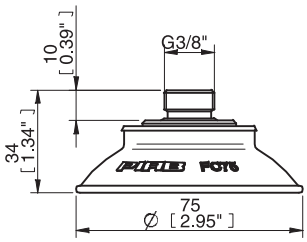

B

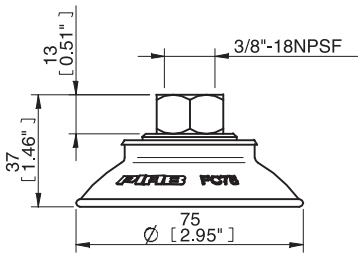

C

Rubber parts	Part No.
Suction cup FC75P Polyurethane 40 with collar for Vacuum Gripper System (VGS)	FC75P.5C
Suction cup FC75P Polyurethane 60 with collar for Vacuum Gripper System (VGS)	FC75P.5E

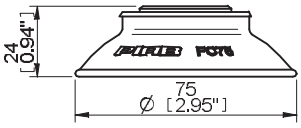

Fittings	Part No.
Thread insert G3/8" male with o-ring and mesh filter for Vacuum Gripper System (VGS)	01.07.148

FC100P

FLAT, CONCAVE SUCTION CUP WITH CLEATS

- Suitable for slightly domed and flat and oily surfaces, e.g., such as those encountered when handling steel sheets in press processes.
- Thanks to the high friction of the rubber material, the suction cups can withstand high forces at rapid accelerations in horizontal directions, even on oily surfaces.
- The suction cups have cleats that prevent thin objects from being disfigured.
- DURAFLEX® material features the elasticity of rubber in combination with the wear resistance of polyurethane.
- The DURAFLEX® material is mark-free.

LIFTING FORCES & TECHNICAL DATA

Material	Outer Dia	Lifting force vertical to the surface, lbf, at vacuum level			Lifting force parallel to the surface, lbf, at vacuum level			Volume	Min. curve radius	Max. vertical movement	Weight rubber part
	in	6 -inHg	18 -inHg	27 -inHg	6 -inHg	18 -inHg	27 -inHg	in^3	in	in	oz
PU40°	3.94	30.8	63.8	84.8	40.0	71.5	94.4	4.88	4.33	0.40	2.26
PU60°	3.94	34.2	73.7	100	25.2	59.3	85.9	4.88	4.33	0.40	2.26

MATERIAL SPECIFICATIONS

Material	Color	Hardness, °Shore A	Temperature range, °F
Polyurethane, PU40	Red transparent	40	50–122
Polyurethane, PU60	Green transparent	60	50–122

MATERIAL RESISTANCE

Wear resistance	Oil	Weather & ozone	Hydrolysis	Gasoline	Concentrated acids	Ethanol	Methanol	Oxidation
Excellent	Excellent	Excellent	Fair	Fair	Fair	Fair	Poor	Poor

ORDERING INFORMATION

	Suction cups with fitting	Weight (oz)	Part No.
A	Suction cup FC100P Polyurethane 40, 1/8"NPSF female	10.7	FC100P.4C.07NA
A	Suction cup FC100P Polyurethane 40, G3/8" female	10.7	FC100P.4C.07ND
A	Suction cup FC100P Polyurethane 40, 3/8"NPSF female	10.7	FC100P.4C.07NE
A	Suction cup FC100P Polyurethane 40, G1/2" female	10.7	FC100P.4C.07NF
A	Suction cup FC100P Polyurethane 60, 1/8"NPSF female	10.7	FC100P.4E.07NA
A	Suction cup FC100P Polyurethane 60, G3/8" female	10.7	FC100P.4E.07ND
A	Suction cup FC100P Polyurethane 60, 3/8"NPSF female	10.7	FC100P.4E.07NE
A	Suction cup FC100P Polyurethane 60, G1/2" female	10.7	FC100P.4E.07NF
B	Suction cup FC100P Polyurethane 40, thread insert G3/8" with mesh filter for Vacuum Gripper System (VGS)	3.24	FC100P.5C.G40M
B	Suction cup FC100P Polyurethane 60, thread insert G3/8" with mesh filter for Vacuum Gripper System (VGS)	3.24	FC100P.5E.G40M
C	Suction cup FC100P Polyurethane 40, brass 3/8"NPSF female	4.30	FC100P.5C.N40W
C	Suction cup FC100P Polyurethane 60, brass 3/8"NPSF female	4.30	FC100P.5E.N40W

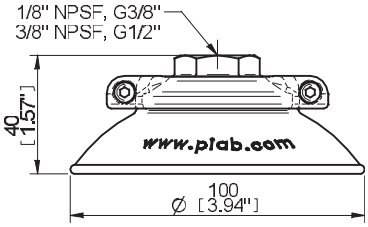

A

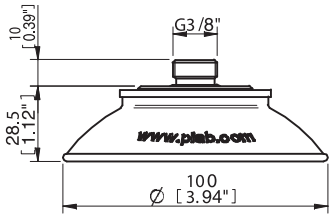

B

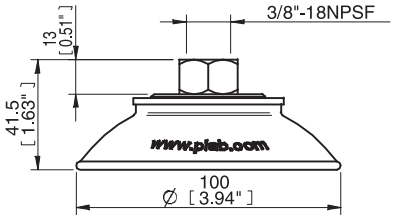

C

	Rubber parts	Part No.
A	Suction cup FC100P Polyurethane 40	FC100P.4C
A	Suction cup FC100P Polyurethane 60	FC100P.4E
B	Suction cup FC100P Polyurethane 40 with collar for Vacuum Gripper System (VGS)	FC100P.5C
B	Suction cup FC100P Polyurethane 60 with collar for Vacuum Gripper System (VGS)	FC100P.5E

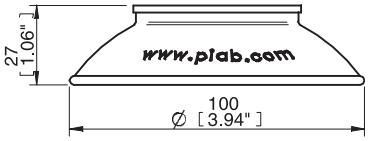

A

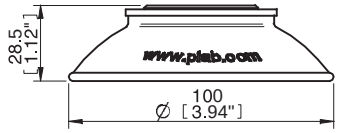

B

Fittings	Part No.
Fitting 1/8"NPSF female, clamp ring with mesh filter	07NA
Fitting G3/8" female, clamp ring with mesh filter	07ND
Fitting 3/8"NPSF female, with mesh filter	07NE
Fitting G1/2" female, clamp ring with mesh filter	07NF
Thread insert G3/8" male, with O-ring and mesh filter for Vacuum Gripper System (VGS)	01.07.148

FC150P

FLAT, CONCAVE SUCTION CUP WITH CLEATS

- Suitable for slightly domed and flat and oily surfaces, e.g., such as those encountered when handling steel sheets in press processes.
- Thanks to the high friction of the rubber material, the suction cups can withstand high forces at rapid accelerations in horizontal directions, even on oily surfaces.
- The suction cups have cleats that prevent thin objects from being disfigured.
- DURAFLEX® material features the elasticity of rubber in combination with the wear resistance of polyurethane.
- The DURAFLEX® material is mark-free.

LIFTING FORCES & TECHNICAL DATA

Material	Outer Dia	Lifting force vertical to the surface, lbf, at vacuum level			Lifting force parallel to the surface, lbf, at vacuum level			Volume	Min. curve radius	Max. vertical movement	Weight rubber part
	in	6 -inHg	18 -inHg	27 -inHg	6 -inHg	18 -inHg	27 -inHg	in³	in	in	oz
PU40°	5.91	61.6	161	210	77.1	172	203	15.3	6.50	0.56	7.51
PU60°	5.91	63.8	145	207	48.3	128	194	15.3	6.50	0.56	7.51

MATERIAL SPECIFICATIONS

Material	Color	Hardness °Shore A	Temperature range °F
Polyurethane, PU40	Red transparent	40	50–122
Polyurethane, PU60	Green transparent	60	50–122

MATERIAL RESISTANCE

Wear resistance	Oil	Weather & ozone	Hydrolysis	Gasoline	Concentrated acids	Ethanol	Methanol	Oxidation
Excellent	Excellent	Excellent	Fair	Fair	Fair	Fair	Poor	Poor

ORDERING INFORMATION

Suction cups with fitting	Weight (oz)	Part No.
Suction cup FC150P Polyurethane 40, G3/8" female, with mesh filter	16.0	FC150P.4C.11NA
Suction cup FC150P Polyurethane 40, 3/8"NPSF female, with mesh filter	16.0	FC150P.4C.11NB
Suction cup FC150P Polyurethane 40, G1/2" female, with mesh filter	16.0	FC150P.4C.11NC
Suction cup FC150P Polyurethane 60, G3/8" female, with mesh filter	16.0	FC150P.4E.11NA
Suction cup FC150P Polyurethane 60, 3/8"NPSF female, with mesh filter	16.0	FC150P.4E.11NB
Suction cup FC150P Polyurethane 60, G1/2" female, with mesh filter	16.0	FC150P.4E.11NC

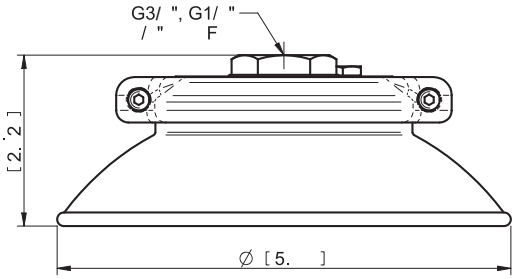

Rubber parts	Part No.
Suction cup FC150P Polyurethane 40	FC150P.4C
Suction cup FC150P Polyurethane 60	FC150P.4E

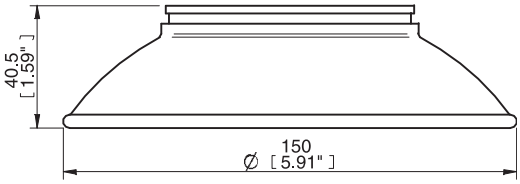

Fittings	Part No.
Fitting G3/8" female, clamp ring with mesh filter	11NA
Fitting 3/8"NPSF female, with mesh filter	11NB
Fitting G1/2" female, clamp ring with mesh filter	11NC

FP200

FLAT SUCTION CUP

- Suitable for handling large, heavy objects with flat surface.

LIFTING FORCES & TECHNICAL DATA

Outer Dia	Lifting force vertical to the surface, lbf, at vacuum level			Lifting force parallel to the surface, lbf, at vacuum level			Volume	Min. curve radius	Max. vertical movement	Weight rubber part
in	6 -inHg	18 -inHg	27 -inHg	6 -inHg	18 -inHg	27 -inHg	in³	in	in	oz
9.37	169	427	607	—	—	—	33.0	—	0.28	5.7

MATERIAL SPECIFICATIONS

Material	Color	Hardness, °Shore A	Temperature range, °F
Polyurethane, PUR	Yellow-white transparent	65	32–176

MATERIAL RESISTANCE

Wear resistance	Oil	Weather & Ozone	Hydrolysis	Gasoline	Concentrated acids	Alcohol	Oxidation
Excellent	Excellent	Excellent	Poor	Fair	Poor	Fair	Good

ORDERING INFORMATION

Suction cups with fitting	Weight (oz)	Part No.
Suction cup FP200 Polyurethane, G3/4" female	40.9	FP200.45.20UA

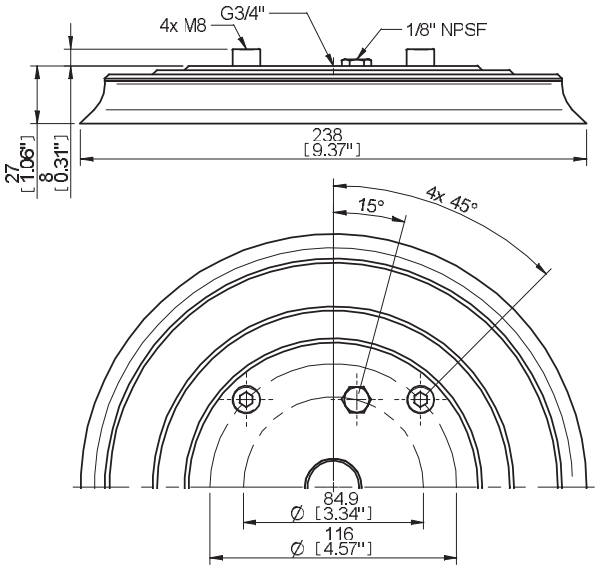

Rubber parts	Part No.
Suction cup FP200 Polyurethane	FP200.45

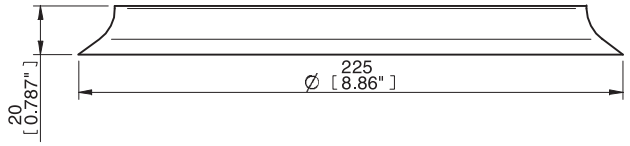

Fittings & accessories	Part No.
Fitting G3/4" female	20UA
Support kit for suction cup FP200, (2 kits needed)	01.06.746

FP300

FLAT SUCTION CUP

- Suitable for handling large, heavy objects with flat surface.

LIFTING FORCES & TECHNICAL DATA

Outer Dia	Lifting force vertical to the surface, lbf, at vacuum level			Lifting force parallel to the surface, lbf, at vacuum level			Volume	Min. curve radius	Max. vertical movement	Weight rubber part
in	6 -inHg	18 -inHg	27 -inHg	6 -inHg	18 -inHg	27 -inHg	in³	in	in	oz
13.7	360	967	1,439	—	—	—	78.4	—	0.28	12.6

MATERIAL SPECIFICATIONS

Material	Color	Hardness, °Shore A	Temperature range, °F
Polyurethane, PUR	Yellow-white transparent	65	32–176

MATERIAL RESISTANCE

Wear resistance	Oil	Weather & Ozone	Hydrolysis	Gasoline	Concentrated acids	Alcohol	Oxidation
Excellent	Excellent	Excellent	Poor	Fair	Poor	Fair	Good

ORDERING INFORMATION

Suction cups with fitting	Weight (oz)	Part. No.
Suction cup FP300 Polyurethane, G3/4" female	86.8	FP300.45.30UA

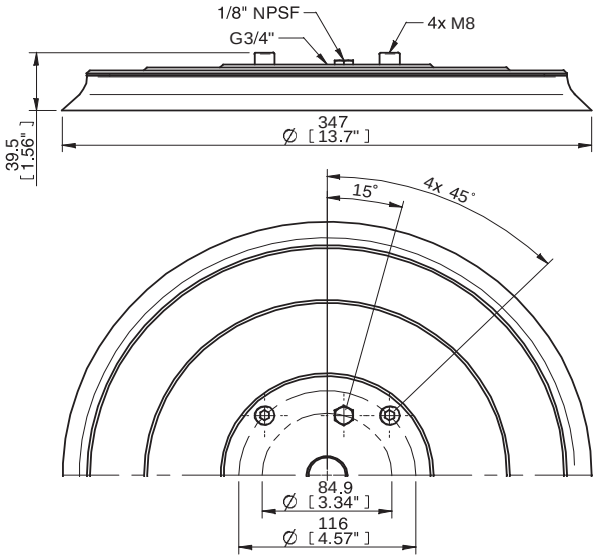

Rubber parts	Part No.
Suction cup FP300 Polyurethane	FP300.45

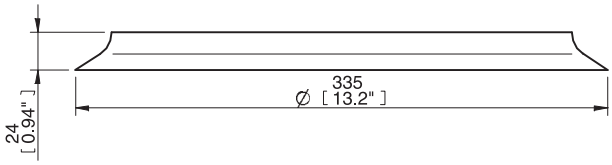

Fittings & accessories	Part No.
Fitting G3/4" female	30UA
Support kit for suction cups P200 & FP300, (2 kits needed)	01.06.747

OB20X60P

OVAL SUCTION CUP WITH SHORT BELLOWS

- Suitable for level adjustment. Can handle objects with height differences and varying shapes, for example embossed or corrugated plates.
- Lifting movement to separate small and thin objects.
- DURAFLEX® material features the elasticity of rubber in combination with the wear resistance of polyurethane.
- The DURAFLEX® material is mark-free.

LIFTING FORCES & TECHNICAL DATA

Outer Dia	Lifting force vertical to the surface, lbf, at vacuum level			Lifting force parallel to the surface, lbf at vacuum level			Volume	Min. curve radius	Max. vertical movement	Weight with fitting
in	6 -inHg	18 -inHg	27 -inHg	6 -inHg	18 -inHg	27 -inHg	in³	in	in	oz
0.93x2.44	2.92	7.64	12.8	2.92	8.32	10.8	1.46	0.28	0.18	0.39

MATERIAL SPECIFICATIONS

Material	Color	Hardness °Shore A	Temperature range °F
Polyurethane, PU60	Green transparent	60	50–122

MATERIAL RESISTANCE

Wear resistance	Oil	Weather & ozone	Hydrolysis	Gasoline	Concentrated acids	Ethanol	Methanol	Oxidation
Excellent	Excellent	Excellent	Fair	Fair	Fair	Fair	Poor	Poor

ORDERING INFORMATION

Suction cups with fitting	Part No.
Suction cup OB20x60P Polyurethane 60, G1/8" male / M5 female	OB20X60P.4E.26UA

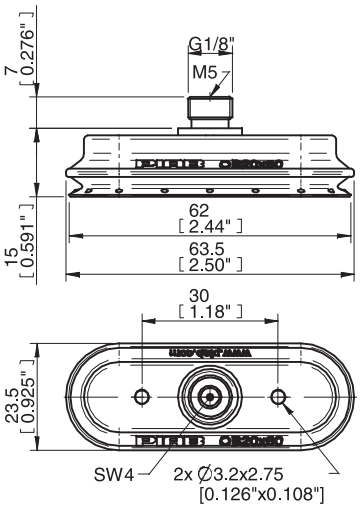

OB35X90P

OVAL SUCTION CUP WITH SHORT BELLOWS

- Suitable for level adjustment. Can handle objects with height differences and varying shapes, for example embossed or corrugated plates.
- Lifting movement to separate small and thin objects.
- Dual hardness allowing strength and stability in conjunction with softness and flexibility.
- DURAFLEX® material features the elasticity of rubber in combination with the wear resistance of polyurethane.
- The DURAFLEX® material is mark-free.

LIFTING FORCES & TECHNICAL DATA

Outer Dia	Material	Lifting force vertical to the surface, lbf, at vacuum level			Lifting force parallel to the surface, lbf, at vacuum level			Volume	Min. curve radius	Max. vertical movement	Weight with fitting
in		6 -inHg	18 -inHg	27 -inHg	6 -inHg	18 -inHg	27 -inHg	in³	in	in	oz
1.67x3.76	PU30°/60°	8.54	22.0	30.1	14.8	34.6	46.3	2.20	0.98	0.31	2.93
1.67x3.76	PU60°	6.29	20.5	32.6	12.6	34.4	48.3	2.20	0.79	0.31	2.93

MATERIAL SPECIFICATIONS

Material	Color	Hardness, °Shore A	Temperature range, °F
Polyurethane, PU30/PU60	Yellow/Green transparent	30/60	50–122
Polyurethane, PU60	Green transparent	60	50–122

MATERIAL RESISTANCE

Wear resistance	Oil	Weather & ozone	Hydrolysis	Gasoline	Concentrated acids	Ethanol	Methanol	Oxidation
Excellent	Excellent	Excellent	Fair	Fair	Fair	Fair	Poor	Poor

ORDERING INFORMATION

	Suction cups with fitting	Part No.
A	Suction cup OB35x90P Polyurethane 30/60, brass 3/8"NPSF female	OB35X90P.5K.N40W
A	Suction cup OB35x90P Polyurethane 60, brass 3/8"NPSF female	OB35x90P.5E.N40W
B	Suction cup OB35x90P Polyurethane 30/60, thread insert G3/8" with mesh filter for Vacuum Gripper System (VGS)	OB35X90P.5K.G40M
B	Suction cup OB35x90P Polyurethane 60, thread insert G3/8" with mesh filter for Vacuum Gripper System (VGS)	OB35x90P.5E.G40M

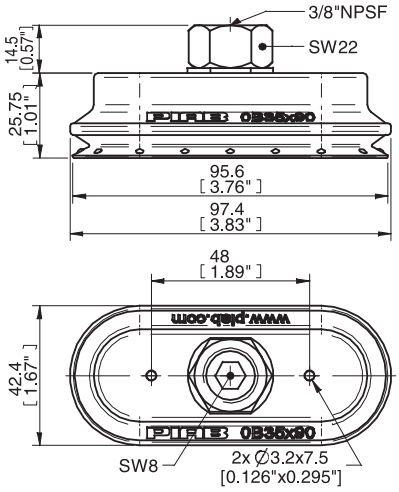

A

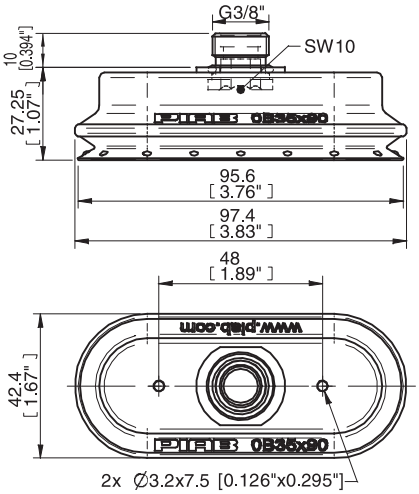

B

Rubber parts	Part No.
Suction cup OB35x90P Polyurethane 30/60 with collar for Vacuum Gripper System (VGS)	OB35x90P.5K
Suction cup OB35x90P Polyurethane 60 with collar for Vacuum Gripper System (VGS)	OB35x90P.5E

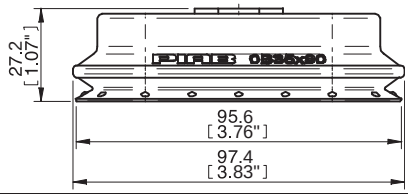

Fittings	Part No.
Thread insert G3/8" male, with O-ring and mesh filter for Vacuum Gripper System (VGS)	01.07.148

OB50X140P

OVAL SUCTION CUP WITH SHORT BELLOWS

- Suitable for level adjustment. Can handle objects with height differences and varying shapes, for example embossed or corrugated plates.
- Lifting movement to separate small and thin objects.
- Dual hardness allowing strength and stability in conjunction with softness and flexibility.
- DURAFLEX® material features the elasticity of rubber in combination with the wear resistance of polyurethane.
- The DURAFLEX® material is mark-free.

LIFTING FORCES & TECHNICAL DATA

Outer Dia	Material	Lifting force vertical to the surface, lbf, at vacuum level			Lifting force parallel to the surface, lbf, at vacuum level			Volume	Min. curve radius	Max. vertical movement	Weight with fitting
in		6 -inHg	18 -inHg	27 -inHg	6 -inHg	18 -inHg	27 -inhg	in³	in	in	oz
2.33x5.75	PU30°/60°	13.0	52.8	82.3	24.7	58.5	78.5	5.80	0.91	0.44	5.85
2.33x5.75	PU60°	17.3	51.9	82.7	27.4	65.6	89.0	5.80	1.02	0.44	5.85

MATERIAL SPECIFICATIONS

Material	Color	Hardness °Shore A	Temperature range °F
Polyurethane, PU30/PU60	Yellow/Green transparent	30/60	50–122
Polyurethane, PU60	Green transparent	60	50–122

MATERIAL RESISTANCE

Wear resistance	Oil	Weather & ozone	Hydrolysis	Gasoline	Concentrated acids	Ethanol	Methanol	Oxidation
Excellent	Excellent	Excellent	Fair	Fair	Fair	Fair	Poor	Poor

ORDERING INFORMATION

	Suction cups with fitting	Part No.
A	Suction cup OB50x140P Polyurethane 30/60, brass 3/8"NPSF female	OB50X140P.5K.N40W
A	Suction cup OB50x140P Polyurethane 60, brass 3/8" NPSF female	OB50X140P.5E.N40W
B	Suction cup OB50x140P Polyurethane 30/60, thread insert G3/8" with mesh filter for Vacuum Gripper System (VGS)	OB50X140P.5K.G40M
B	Suction cup OB50x140P Polyurethane 60, thread insert G3/8" with mesh filter for Vacuum Gripper System (VGS)	OB50X140P.5E.G40M

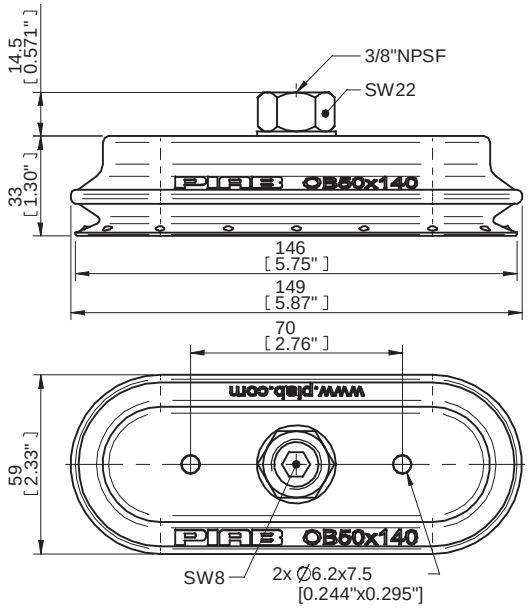

A

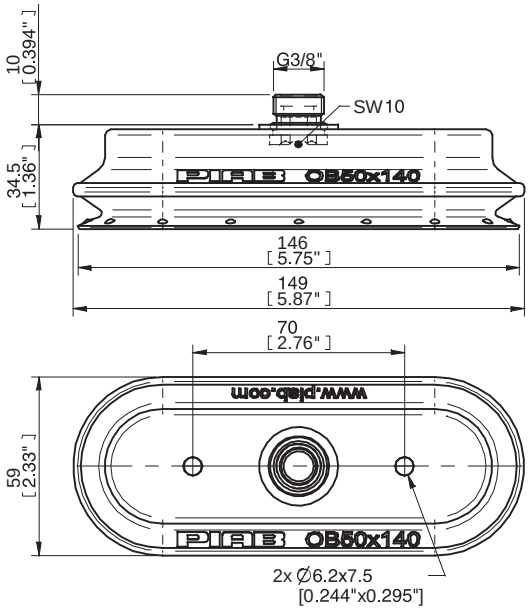

B

Rubber parts	Part No.
Suction cup OB50x140P Polyurethane 30/60 with collar for Vacuum Gripper System (VGS)	OB50X140P.5K
Suction cup OB50x140P Polyurethane 60 with collar for Vacuum Gripper System (VGS)	OB50X140P.5E

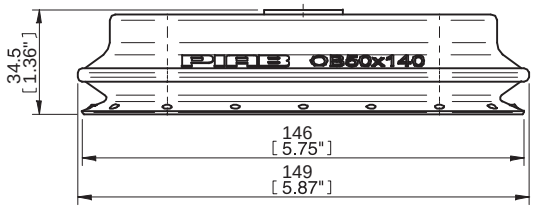

Fittings	Part No.
Thread insert G3/8" male, with O-ring and mesh filter for Vacuum Gripper System (VGS)	01.07.148

OB65X170P

OVAL SUCTION CUP WITH SHORT BELLOWS

- Suitable for level adjustment. Can handle objects with height differences and varying shapes, for example embossed or corrugated plates.
- Lifting movement to separate small and thin objects.
- Dual hardness allowing strength and stability in conjunction with softness and flexibility.
- DURAFLEX® material features the elasticity of rubber in combination with the wear resistance of polyurethane.
- The DURAFLEX® material is mark-free.

LIFTING FORCES & TECHNICAL DATA

Outer Dia	Material	Lifting force vertical to the surface, lbf at vacuum level			Lifting force parallel to the surface, lbf, at vacuum level			Volume	Min. curve radius	Max. vertical movement	Weight with fitting
in		6 -inHg	18 -inHg	27 -inHg	6 -inHg	18 -inHg	27 -inHg	in³	in	in	oz
2.99x6.98	PU30°/60°	26.8	75.3	122	31.7	85.2	120	10.7	1.50	0.63	9.77
2.99x6.98	PU60°	29.2	69.7	120	38.2	98.9	135	10.7	1.50	0.63	9.77

MATERIAL SPECIFICATIONS

Material	Color	Hardness °Shore A	Temperature range °F
Polyurethane, PU30/PU60	Yellow/Green transparent	30/60	50–122
Polyurethane, PU60	Green transparent	60	50–122

MATERIAL RESISTANCE

Wear resistance	Oil	Weather & ozone	Hydrolysis	Gasoline	Concentrated acids	Ethanol	Methanol	Oxidation
Excellent	Excellent	Excellent	Fair	Fair	Fair	Fair	Poor	Poor

ORDERING INFORMATION

	Suction cups with fitting	Part. No.
A	Suction cup OB65x170P Polyurethane 30/60, brass 3/8"NPSF female	OB65X170P.5K.N40W
A	Suction cup OB65x170P Polyurethane 60, brass 3/8"NPSF female	OB65X170P.5E.N40W
B	Suction cup OB65x170P Polyurethane 30/60, thread insert G3/8" with mesh filter for Vacuum Gripper System (VGS)	OB65X170P.5K.G40M
B	Suction cup OB65x170P Polyurethane 60, thread insert G3/8" with mesh filter for Vacuum Gripper System (VGS)	OB65X170P.5E.G40M

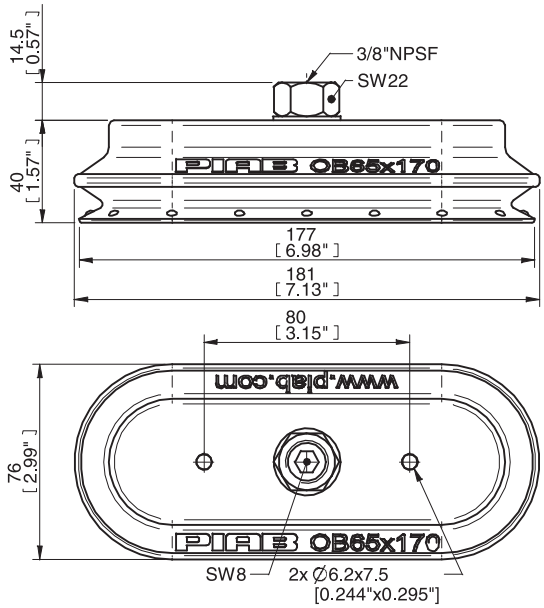

A

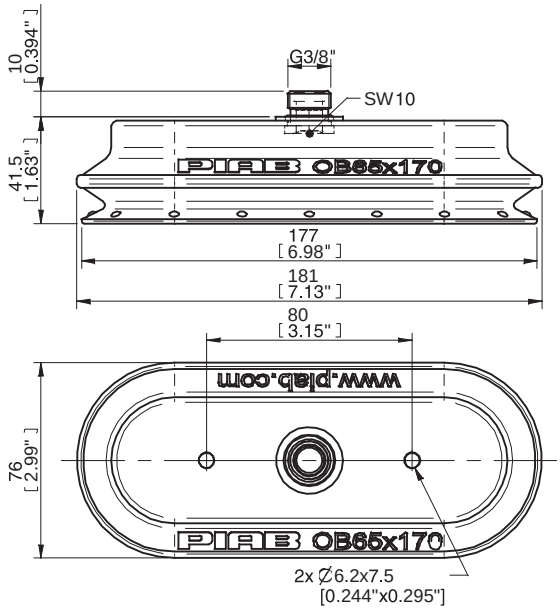

B

Rubber parts	Part No.
Suction cup OB65x170P Polyurethane 30/60 with collar for Vacuum Gripper System (VGS)	OB65X170P.5K
Suction cup OB65x170P Polyurethane 60 with collar for Vacuum Gripper System (VGS)	OB65X170P.5E

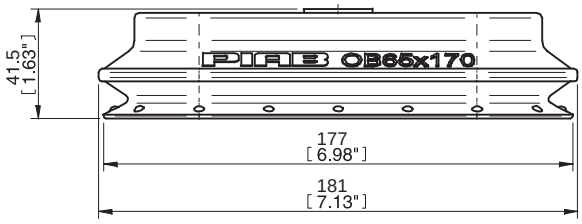

Fittings	Part No.
Thread insert G3/8" male, with O-ring and mesh filter for Vacuum Gripper System (VGS)	01.07.148

OC60X140

OVAL, CONCAVE SUCTION CUP

- Suitable for handling oblong objects with flat or curved surface.
- Good stability and little inherent movement.
- Thick, durable lip.

LIFTING FORCES & TECHNICAL DATA

Outer Dia	Lifting force vertical to the surface, lbf, at vacuum level			Lifting force parallel to the surface, lbf, at vacuum level			Volume	Min. curve radius	Max. vertical movement	Weight with fitting
in	6 -inHg	18 -InHg	27 -inHg	6 -inHg	18 -inHg	27 -inHg	in^3	in	in	oz
2.40x5.43	29.7	83.9	117	41.8	83.9	115	3.17	7.87	0.30	5.64

MATERIAL SPECIFICATIONS

Material	Color	Hardness °Shore A	Temperature range °F
Nitrile	Black	50	20–225

MATERIAL RESISTANCE

Wear resistance	Oil	Weather & Ozone	Hydrolysis	Gasoline	Concentrated acids	Alcohol	Oxidation
Excellent	Excellent	Fair	Good	Good	Fair	Good	Good

ORDERING INFORMATION

Suction cups with fitting	Part No.
Suction cup OC60x140 Nitrile, 3/8" NPT female (standard lip)	OC60x140.35.61UA
Suction cup OC60x140 Nitrile, 3/8" NPT female (flexible lip)	OC60X140.35.61UB

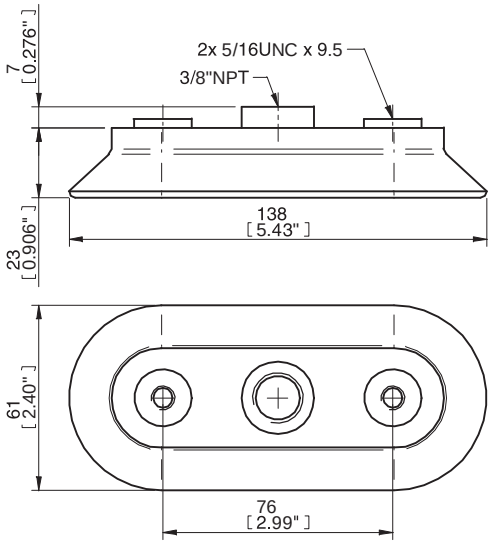

OC35X90P

OVAL, CONCAVE SUCTION CUP

- Suitable for oblong objects with slightly domed or flat and oily surfaces, such as those encountered in body parts in the automotive industry.
- DURAFLEX® suction cups manufactured in a specially developed material that features the elasticity of rubber and wear resistance of polyurethane. The material does not leave any marks on the objects handled.
- Fitting option, male G3/8", with a swivel function prior to the locking operation, for easy positioning of the oval cup.

LIFTING FORCES & TECHNICAL DATA

Material	Outer Dia	Lifting force vertical to the surface, lbf, at vacuum level			Lifting force parallel to the surface, lbf, at vacuum level			Volume	Min. curve radius	Max. vertical movement	Weight with fitting	Weight with adj. thread insert
	in	6 -inHg	18 -inHg	27 -inHg	6 -inHg	18 -inHg	27 -inHg	in³	in	in	oz	oz
PU40°	1.46x3.70	11.0	26.3	38.4	11.9	25.2	33.0	1.22	—	0.12	0.95	1.41
PU60°	1.46x3.70	11.0	29.7	38.4	15.3	36.2	46.3	1.22	—	0.12	0.95	1.41

MATERIAL SPECIFICATIONS

Material	Color	Hardness °Shore A	Temperature range °F
Polyurethane, PU40	Red transparent	40	50–122
Polyurethane, PU60	Green transparent	60	50–122

MATERIAL RESISTANCE

Wear resistance	Oil	Weather & ozone	Hydrolysis	Gasoline	Concentrated acids	Ethanol	Methanol	Oxidation
Excellent	Excellent	Excellent	Fair	Fair	Fair	Fair	Poor	Poor

ORDERING INFORMATION

	Suction cups with fitting	Part No.
A	Suction cup OC35x90P Polyurethane 40, G3/8" female	OC35x90P.4C.39UA
A	Suction cup OC35x90P Polyurethane 40, 3/8"NPSF female	OC35x90P.4C.39UB
A	Suction cup OC35x90P Polyurethane 60, G3/8" female	OC35x90P.4E.39UA
A	Suction cup OC35x90P Polyurethane 60, 3/8"NPSF female	OC35x90P.4E.39UB
B	Suction cup OC35x90P Polyurethane 40, adjustable thread insert G3/8" male with mesh filter	OC35x90P.4C.G41M
B	Suction cup OC35x90P Polyurethane 60, adjustable thread insert G3/8" male with mesh filter	OC35x90P.4E.G41M

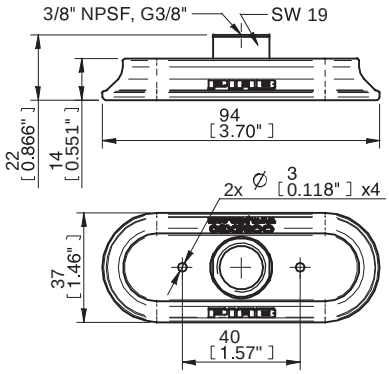

A

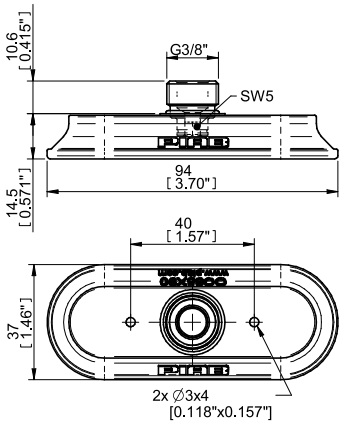

B

Rubber parts	Part No.
Suction cup OC35x90P Polyurethane 40	OC35x90P.4C
Suction cup OC35x90P Polyurethane 60	OC35x90P.4E

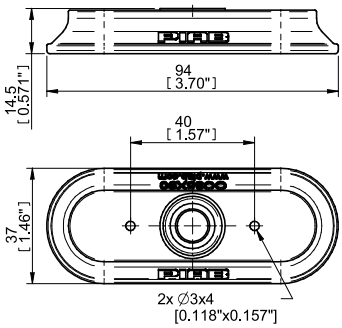

Fittings	Part No.
Thread insert G3/8" male, with O-ring and mesh filter for Vacuum Gripper System (VGS)	01.07.148

OF10X30P

FLAT, OVAL SUCTION CUP WITH CLEATS

- Suitable for flat and rough surfaces.
- Fair stability and little inherent movement.
- Recommended when the lifting force is parallel to the surface of the object.
- Cleats prevent thin, sensitive objects from being deformed and give extra friction when the lifting force is parallel to the surface of the object.
- DURAFLEX® material features the elasticity of rubber in combination with the wear resistance of polyurethane.
- The DURAFLEX® material is mark-free.

LIFTING FORCES & TECHNICAL DATA

Outer Dia	Lifting force vertical to the surface, lbf, at vacuum level			Lifting force parallel to the surface, lbf, at vacuum level			Volume	Min. curve radius	Max. vertical movement	Weight with fitting
in	6 -inHg	18 -inHg	27 -inHg	6 -inHg	18 -inHg	27 -inHg	in³	in	in	oz
0.43x1.21	0.90	2.47	3.82	1.35	2.70	3.82	0.03	0.59	0.04	0.14

MATERIAL SPECIFICATIONS

Material	Color	Hardness °Shore A	Temperature range °F
Polyurethane, PU50	Blue transparent	50	50–122

MATERIAL RESISTANCE

Wear resistance	Oil	Weather & ozone	Hydrolysis	Gasoline	Concentrated acids	Ethanol	Methanol	Oxidation
Excellent	Excellent	Excellent	Fair	Fair	Fair	Fair	Poor	Poor

ORDERING INFORMATION

Suction cups with fitting	Part No.
Suction cup OF10x30P Polyurethane 50, M5 male	OF10X30P.4D.13UA

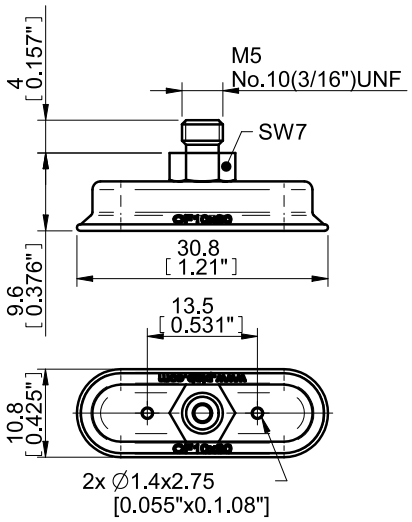

OF15X45P

FLAT, OVAL SUCTION CUP WITH CLEATS

- Suitable for flat and rough surfaces.
- Fair stability and little inherent movement.
- Recommended when the lifting force is parallel to the surface of the object.
- Cleats prevent thin, sensitive objects from being deformed and give extra friction when the lifting force is parallel to the surface of the object.
- DURAFLEX® material features the elasticity of rubber in combination with the wear resistance of polyurethane.
- The DURAFLEX® material is mark-free.

LIFTING FORCES & TECHNICAL DATA

Outer Dia	Lifting force vertical to the surface, lbf, at vacuum level			Lifting force parallel to the surface, lbf, at vacuum level			Volume	Min. curve radius	Max. vertical movement	Weight with fitting
in	6 -inHg	18 -inHg	27 -inHg	6 -inHg	18 -inHg	27 -inHg	in³	in	in	oz
0.59x1.77	2.02	6.07	9.22	1.35	4.50	7.64	0.06	1.18	0.04	0.18

MATERIAL SPECIFICATIONS

Material	Color	Hardness °Shore A	Temperature range °F
Polyurethane, PU50	Blue transparent	50	50–122

MATERIAL RESISTANCE

Wear resistance	Oil	Weather & ozone	Hydrolysis	Gasoline	Concentrated acids	Ethanol	Methanol	Oxidation
Excellent	Excellent	Excellent	Fair	Fair	Fair	Fair	Poor	Poor

ORDERING INFORMATION

Suction cups with fitting	Part No.
Suction cup OF15x45P Polyurethane PU50, G1/8" male	OF15X45P.4D.14UA

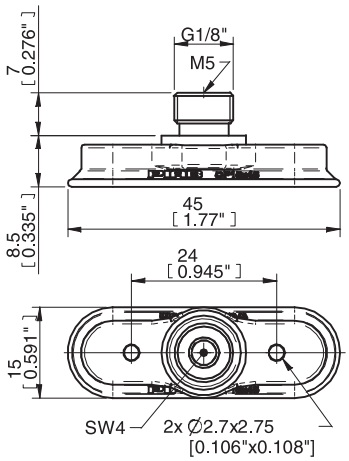

OF25X70P

FLAT, OVAL SUCTION CUP WITH CLEATS

- Suitable for flat and rough surfaces.
- Fair stability and little inherent movement.
- Recommended when the lifting force is parallel to the surface of the object.
- Cleats prevent thin, sensitive objects from being deformed and give extra friction when the lifting force is parallel to the surface of the object.
- DURAFLEX® material features the elasticity of rubber in combination with the wear resistance of polyurethane.
- The DURAFLEX® material is mark-free.

LIFTING FORCES & TECHNICAL DATA

Material	Outer Dia	Lifting force vertical to the surface, lbf, at vacuum level			Lifting force parallel to the surface, lbf, at vacuum level			Volume	Min. curve radius	Max. vertical movement	Weight with fitting
	in	6 -inHg	18 -inHg	27 -inHg	6 -inHg	18 -inHg	27 -inHg	in³	in	in	oz
PU40°	1.07x2.85	5.40	14.8	24.1	10.3	20.2	23.6	0.37	1.97	0.07	0.67
PU60°	1.07x2.85	5.40	17.3	26.5	9.44	28.6	36.2	0.37	1.97	0.07	0.67

MATERIAL SPECIFICATIONS

Material	Color	Hardness °Shore A	Temperature range °F
Polyurethane, PU40	Red transparent	40	50-122
Polyurethane, PU60	Green transparent	60	50-122

MATERIAL RESISTANCE

Wear resistance	Oil	Weather & ozone	Hydrolysis	Gasoline	Concentrated acids	Ethanol	Methanol	Oxidation
Excellent	Excellent	Excellent	Fair	Fair	Fair	Fair	Poor	Poor

ORDERING INFORMATION

Suction cups with fitting	Part No.
Suction cup OF25x70P Polyurethane 60, G3/8" male - 1/8"NPSF female	OF25X70P.4C.27UF
Suction cup OF25x70P Polyurethane 40, G3/8" male - 1/8"NPSF female	OF25X70P.4E.27UF

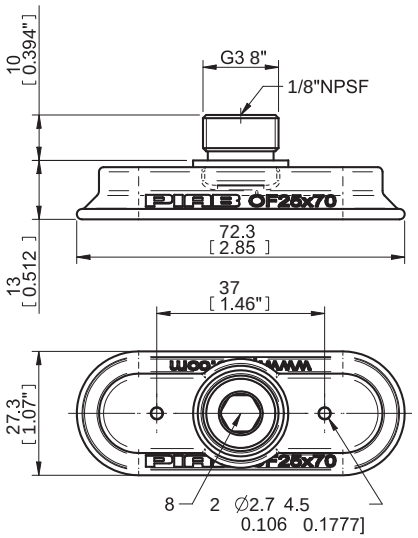

OF40X110P

FLAT, OVAL SUCTION CUP WITH CLEATS

- Suitable for flat and rough surfaces.
- Fair stability and little inherent movement.
- Recommended when the lifting force is parallel to the surface of the object.
- Cleats prevent thin, sensitive objects from being deformed and give extra friction when the lifting force is parallel to the surface of the object.
- DURAFLEX® material features the elasticity of rubber in combination with the wear resistance of polyurethane.
- The DURAFLEX® material is mark-free.

LIFTING FORCES & TECHNICAL DATA

Material	Outer Dia	Lifting force vertical to the surface, lbf, at vacuum level			Lifting force parallel to the surface, lbf, at vacuum level			Volume	Min. curve radius	Max. vertical movement	Weight with fitting
	in	6 -inHg	18 -inHg	27 -inHg	6 -inHg	18 -inHg	27 -inHg	in³	in	in	oz
PU40°	1.69x4.45	15.5	45.6	65.9	27.0	51.7	66.5	1.28	3.03	0.12	2.96
PU60°	1.69x4.45	16.6	45.0	68.1	22.0	51.3	92.2	1.28	3.03	0.12	2.96

MATERIAL SPECIFICATIONS

Material	Color	Hardness, °Shore A	Temperature range, °F
Polyurethane, PU40	Red transparent	40	50-122
Polyurethane, PU60	Green transparent	60	50-122

MATERIAL RESISTANCE

Wear resistance	Oil	Weather & ozone	Hydrolysis	Gasoline	Concentrated acids	Ethanol	Methanol	Oxidation
Excellent	Excellent	Excellent	Fair	Fair	Fair	Fair	Poor	Poor

ORDERING INFORMATION

	Suction cups with fitting	Part No.
A	Suction cup OF40x110P Polyurethane 40, brass 3/8"NPSF female	OF40X110P.5C.N40W
A	Suction cup OF40x110P Polyurethane 60, brass 3/8"NPSF female	OF40X110P.5E.N40W
B	Suction cup OF40x110P Polyurethane 40, thread insert G3/8" with mesh filter for Vacuum Gripper System (VGS)	OF40X110P.5C.G40M
B	Suction cup OF40x110P Polyurethane 60, thread insert G3/8" with mesh filter for Vacuum Gripper System (VGS)	OF40X110P.5E.G40M

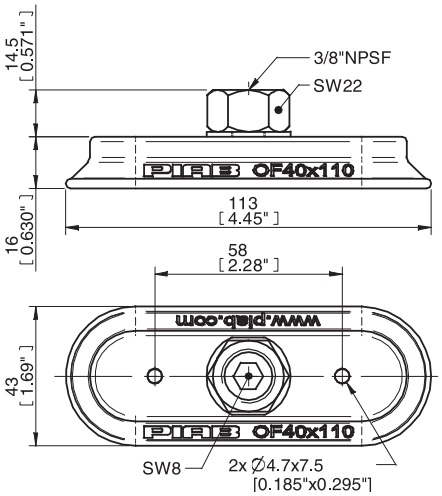

A

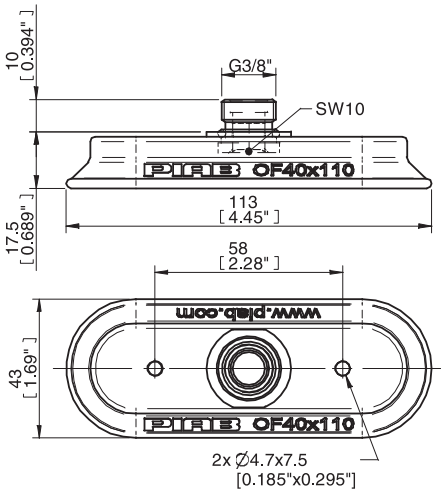

B

Rubber parts	Part No.
Suction cup OF40x110P Polyurethane 40 with collar for Vacuum Gripper System (VGS)	OF40X110P.5C
Suction cup OF40x110P Polyurethane 60 with collar for Vacuum Gripper System (VGS)	OF40X110P.5E

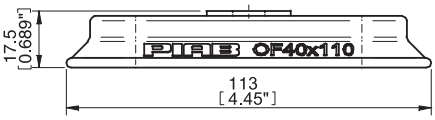

Fittings	Part No.
Thread insert G3/8" male, with O-ring and mesh filter for Vacuum Gripper System (VGS)	01.07.148

OF55X150P

FLAT, OVAL SUCTION CUP WITH CLEATS

- Suitable for flat and rough surfaces.
- Fair stability and little inherent movement.
- Recommended when the lifting force is parallel to the surface of the object.
- Cleats prevent thin, sensitive objects from being deformed and give extra friction when the lifting force is parallel to the surface of the object.
- DURAFLEX® material features the elasticity of rubber in combination with the wear resistance of polyurethane.
- The DURAFLEX® material is mark-free.

LIFTING FORCES & TECHNICAL DATA

Material	Outer Dia	Lifting force vertical to the surface, lbf, at vacuum level			Lifting force parallel to the surface, lbf, at vacuum level			Volume	Min. curve radius	Max. vertical movement	Weight with fitting
	in	6 -inHg	18 -inHg	27 -inHg	6 -inHg	18 -inHg	27 -inHg	in³	in	in	oz
PU40°	2.32x6.06	29.4	82.3	118	34.8	78.7	102	2.26	5.91	0.12	5.18
PU60°	2.32x6.06	30.1	84.5	125	28.8	76.0	107	2.26	5.91	0.12	5.18

MATERIAL SPECIFICATIONS

Material	Color	Hardness °Shore A	Temperature range °F
Polyurethane, PU40	Red transparent	40	50-122
Polyurethane, PU60	Green transparent	60	50-122

MATERIAL RESISTANCE

Wear resistance	Oil	Weather & ozone	Hydrolysis	Gasoline	Concentrated acids	Ethanol	Methanol	Oxidation
Excellent	Excellent	Excellent	Fair	Fair	Fair	Fair	Poor	Poor

ORDERING INFORMATION

	Suction cups with fitting	Part No.
A	Suction cup OF55x150P Polyurethane 40, 3/8"NPSF female	OF55X150P.5C.N40W
A	Suction cup OF55x150P Polyurethane 60, 3/8"NPSF female	OF55X150P.5E.N40W
B	Suction cup OF55x150P Polyurethane 40, thread insert G3/8" with mesh filter for Vacuum Gripper System (VGS)	OF55X150P.5C.G40M
B	Suction cup OF55x150P Polyurethane 60, thread insert G3/8" with mesh filter for Vacuum Gripper System (VGS)	OF55X150P.5E.G40M

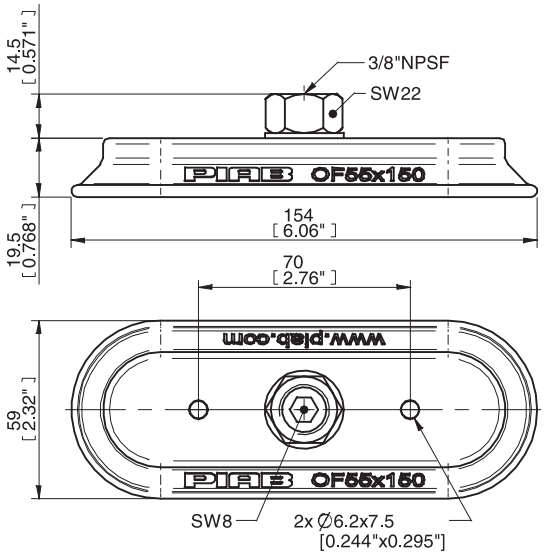

A

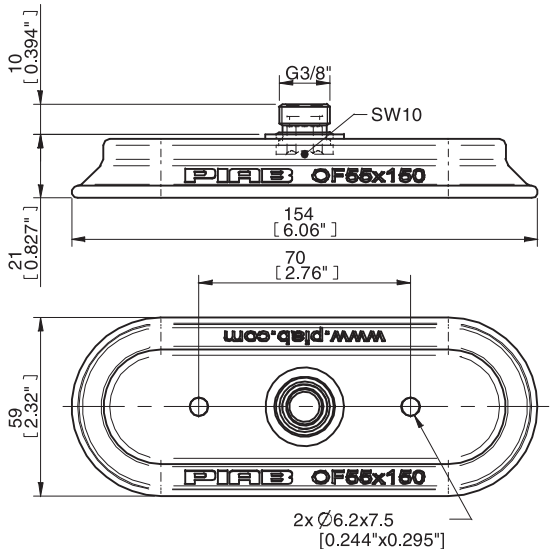

B

Rubber parts	Part No.
Suction cup OF55x150P Polyurethane 40 with collar for Vacuum Gripper System (VGS)	OF55X150P.5C
Suction cup OF55x150P Polyurethane 60 with collar for Vacuum Gripper System (VGS)	OF55X150P.5E

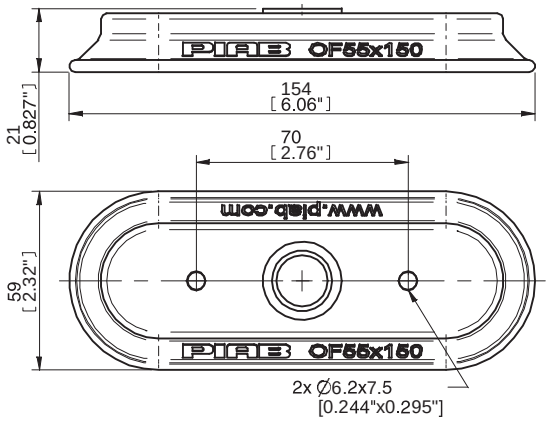

Fittings	Part No.
Thread insert G3/8" male, with O-ring and mesh filter for Vacuum Gripper System (VGS)	01.07.148

OF70X175P

FLAT, OVAL SUCTION CUP WITH CLEATS

- Suitable for flat and rough surfaces.
- Fair stability and little inherent movement.
- Recommended when the lifting force is parallel to the surface of the object.
- Cleats prevent thin, sensitive objects from being deformed and give extra friction when the lifting force is parallel to the surface of the object.
- DURAFLEX® material features the elasticity of rubber in combination with the wear resistance of polyurethane.
- The DURAFLEX® material is mark-free.

LIFTING FORCES & TECHNICAL DATA

Material	Outer Dia	Lifting force vertical to the surface, lbf, at vacuum level			Lifting force parallel to the surface, lbf, at vacuum level			Volume	Min. curve radius	Max. vertical movement	Weight with fitting
	in	6 -inHg	18 -inHg	27 -inHg	6 -inHg	18 -inHg	27 -inHg	in³	in	in	oz
PU40°	2.95x7.09	42.7	119	176	38.2	98.9	142	4.88	5.12	0.22	8.11
PU60°	2.95x7.09	40.5	128	193	45.0	125	169	4.88	5.12	0.22	8.11

MATERIAL SPECIFICATIONS

Material	Color	Hardness °Shore A	Temperature range °F
Polyurethane, PU40	Red transparent	40	50-122
Polyurethane, PU60	Green transparent	60	50-122

MATERIAL RESISTANCE

Wear resistance	Oil	Weather & ozone	Hydrolysis	Gasoline	Concentrated acids	Ethanol	Methanol	Oxidation
Excellent	Excellent	Excellent	Fair	Fair	Fair	Fair	Poor	Poor

ORDERING INFORMATION

	Suction cups with fitting	Part No.
A	Suction cup OF70x175P Polyurethane 40, 3/8"NPSF female	OF70X175P.5C.N40W
A	Suction cup OF70x175P Polyurethane 60, 3/8"NPSF female	OF70X175P.5E.N40W
B	Suction cup OF70x175P Polyurethane 40, thread insert G3/8" with mesh filter for Vacuum Gripper System (VGS)	OF70X175P.5C.G40M
B	Suction cup OF70x175P Polyurethane 60, thread insert G3/8" with mesh filter for Vacuum Gripper System (VGS)	OF70X175P.5E.G40M

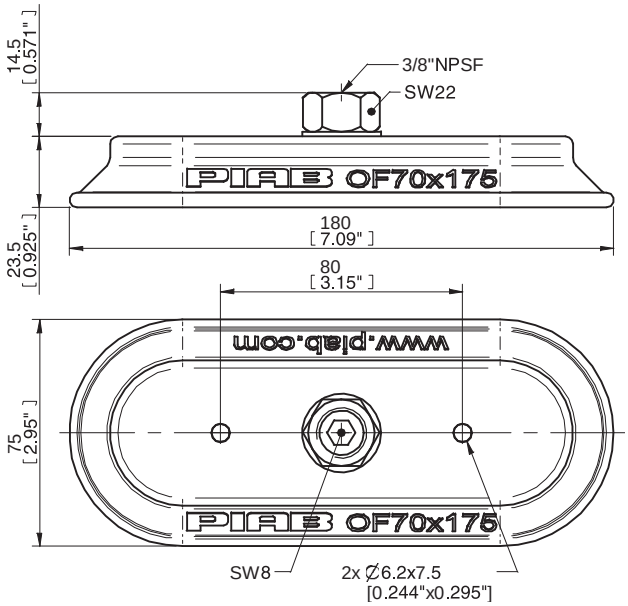

A

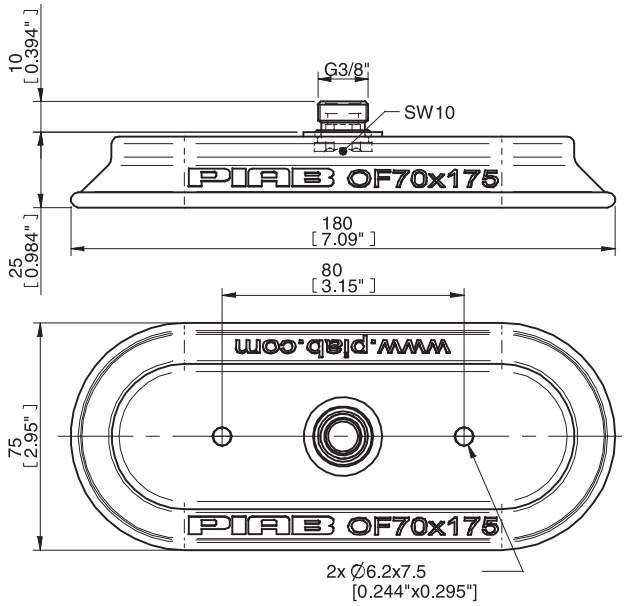

B

Rubber parts	Part No.
Suction cup OF70x175P Polyurethane 40 with collar for Vacuum Gripper System (VGS)	OF70X175P.5C
Suction cup OF70x175P Polyurethane 60 with collar for Vacuum Gripper System (VGS)	OF70X175P.5E

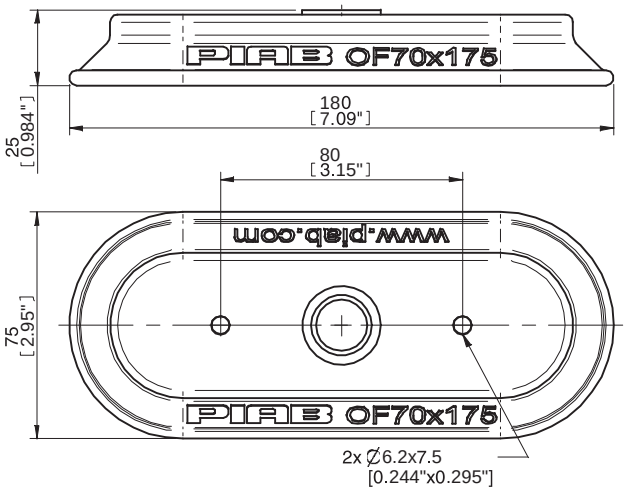

Fittings	Part No.
Thread insert G3/8" male, with O-ring and mesh filter for Vacuum Gripper System (VGS)	01.07.148

OP20X100

OVAL SUCTION CUP WITH CELLULAR RUBBER PROFILE

- Suitable for handling oblong objects or thin pieces with uneven and rough surfaces.
- Use a ball joint fitting if prone to bending.

LIFTING FORCES & TECHNICAL DATA

Outer Dia	Lifting force vertical to the surface, lbf, at vacuum level			Lifting force parallel to the surface, lbf, at vacuum level			Volume	Min. curve radius	Max. vertical movement	Weight with fitting
in	6 -inHg	18 -inHg	27 -inHg	6 -inHg	18 -inHg	27 -inHg	in³	in	in	oz
1.22x4.37	5.62	18.0	24.7	—	—	—	0.85	—	0.06	3.07

MATERIAL SPECIFICATIONS

Material	Color	Hardness °Shore A	Temperature range °F
Ethylene propylene, EPDM	Grey	—	-40–212

MATERIAL RESISTANCE

Wear resistance	Oil	Weather & Ozone	Hydrolysis	Gasoline	Concentrated acids	Alcohol	Oxidation
Fair	Poor	Excellent	Good	Poor	Poor	Excellent	Excellent

ORDERING INFORMATION

Suction cups with fitting	Part No.
Suction cup OP20x100 Ethylene propylene, 1/8"NPSF female	OP20x100.50.21UA

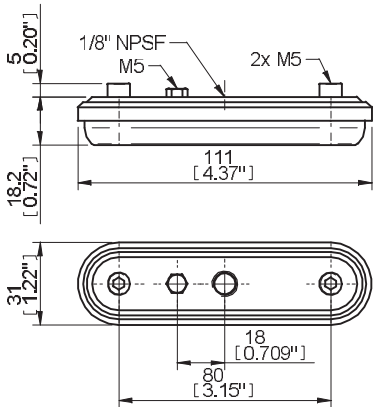

Rubber parts	Part No.
Suction cup OP20x100 Ethylene propylene	OP20x100.50

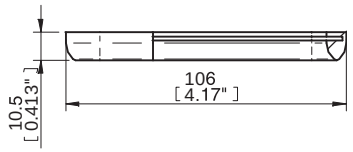

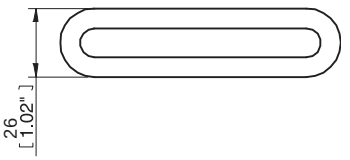

Fittings	Part No.
Fitting 1/8"NPSF female	21UA

OP40X200

OVAL SUCTION CUP WITH CELLULAR RUBBER PROFILE

- Suitable for handling oblong objects or thin pieces with uneven and rough surfaces.
- Use a ball joint fitting if prone to bending.

LIFTING FORCES & TECHNICAL DATA

Outer Dia	Lifting force vertical to the surface, lbf, at vacuum level			Lifting force parallel to the surface, lbf, at vacuum level			Volume	Min. curve radius	Max. vertical movement	Weight with fitting
in	6 -inHg	18 -inHg	27 -inHg	6 -inHg	18 -inHg	27 -inHg	in³	in	in	oz
2.01x8.31	22.5	71.9	98.9	—	—	—	3.42	—	0.10	11.5

MATERIAL SPECIFICATIONS

Material	Color	Hardness °Shore A	Temperature range °F
Ethylene propylene, EPDM	Grey	—	-40–212

MATERIAL RESISTANCE

Wear resistance	Oil	Weather & Ozone	Hydrolysis	Gasoline	Concentrated acids	Alcohol	Oxidation
Fair	Poor	Excellent	Good	Poor	Poor	Excellent	Excellent

ORDERING INFORMATION

Suction cups with fitting	Part No.
Suction cup OP40x200 Ethylene propylene, G1/2" female	OP40x200.50.42UA

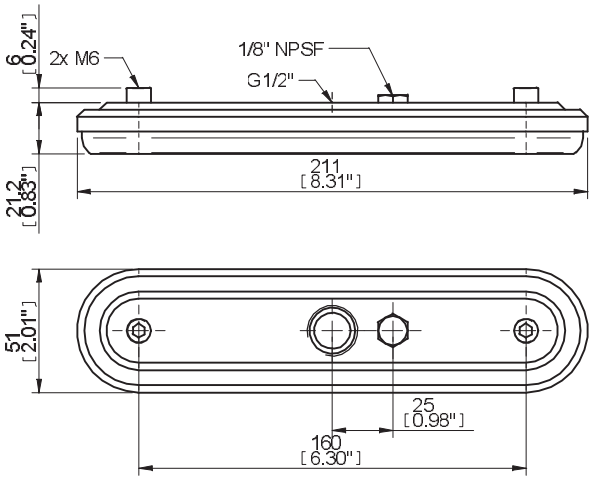

Rubber parts	Part No.
Suction cup OP40x200 Ethylene propylene	OP40x200.50

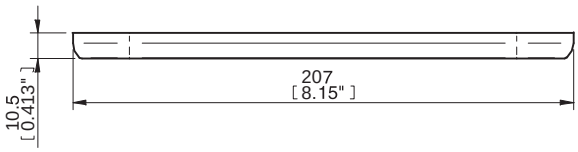

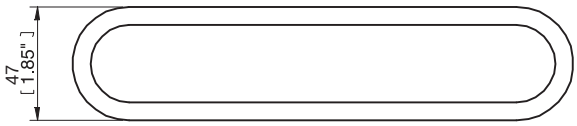

Fittings	Part No.
Fitting G1/2" female	42UA

P35

SUCTION CUP WITH CELLULAR RUBBER PROFILE

- Suitable for irregular and rough surfaces.
- Use a ball joint if prone to bending.
- Available with adjustable support for handling thin material. Also suitable for applications requiring accurate positioning.
- Can also be equipped with a cone valve.

LIFTING FORCES & TECHNICAL DATA

Outer Dia	Lifting force vertical to the surface, lbf, at vacuum level			Lifting force parallel to the surface, lbf, at vacuum level			Volume	Min. curve radius	Max. vertical movement	Weight with fitting
in	6 -inHg	18 -inHg	27 -inHg	6 -inHg	18 -inHg	27 -inHg	in³	in	in	oz
1.67	4.50	11.2	15.7	—	—	—	0.37	—	0.12	0.78

MATERIAL SPECIFICATIONS

Material	Color	Hardness °Shore A	Temperature range °F
Ethylene propylene, EPDM	Grey	—	-40–212

MATERIAL RESISTANCE

Wear resistance	Oil	Weather & Ozone	Hydrolysis	Gasoline	Concentrated acids	Alcohol	Oxidation
Fair	Poor	Excellent	Good	Poor	Poor	Excellent	Excellent

ORDERING INFORMATION

	Suction cups with fitting	Part. No.
A	Suction cup P35 Ethylene propylene, 1/8"NPSF female	P35.50.03UA
B	Suction cup P35 Ethylene propylene, 1/8"NPSF female, with cone valve	P35.50.03UV
B	Suction cup P35 Ethylene propylene, 1/8"NPSF female, with adjustable support	P35.50.03US

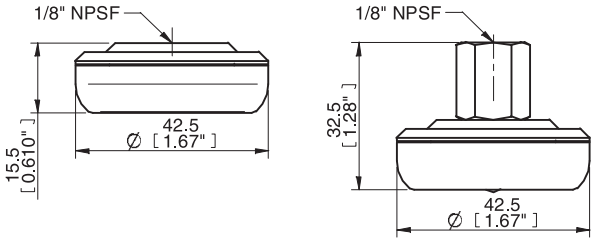

A B

Rubber parts	Part No.
Suction cup P35 Ethylene propylene	P35.50

Fittings & accessories	Part No.
Fitting 1/8"NPSF female	03UA
Adjustable support for P35	03US
Cone valve for P35 & P60	33.50.033

P60

SUCTION CUP WITH CELLULAR RUBBER PROFILE

- Suitable for irregular and rough surfaces.
- Use a ball joint if prone to bending.
- Available with adjustable support for handling thin material. Also suitable for applications requiring accurate positioning.
- Can also be equipped with a cone valve.

LIFTING FORCES & TECHNICAL DATA

Outer Dia	Lifting force vertical to the surface, lbf, at vacuum level			Lifting force parallel to the surface, lbf, at vacuum level			Volume	Min. curve radius	Max. vertical movement	Weight with fitting
in	6 -inHg	18 -inHg	27 -inHg	6 -inHg	18 -inHg	27 -inHg	in³	in	in	oz
2.66	13.5	33.7	49.5	—	—	—	1.22	—	0.12	2.12

MATERIAL SPECIFICATIONS

Material	Color	Hardness °Shore A	Temperature range °F
Ethylene propylene, EPDM	Grey	—	-40–212

MATERIAL RESISTANCE

Wear resistance	Oil	Weather & Ozone	Hydrolysis	Gasoline	Concentrated acids	Alcohol	Oxidation
Fair	Poor	Excellent	Good	Poor	Poor	Excellent	Excellent

ORDERING INFORMATION

	Suction cups with fitting	Part No.
A	Suction cup P60 Ethylene propylene, 1/8"NPSF female	P60.50.06UA
B	Suction cup P60 Ethylene propylene, 1/8"NPSF female, with cone valve	P60.50.06UV
B	Suction cup P60 Ethylene propylene, 1/8"NPSF female, with adjustable support	P60.50.06US

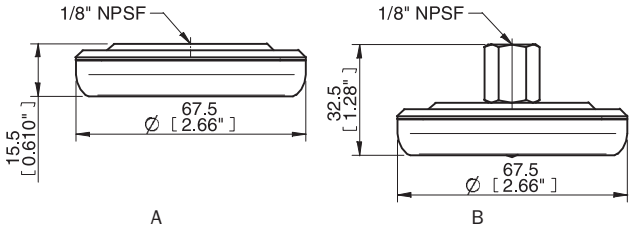

Rubber parts	Part No.
Suction cup P60 Ethylene propylene	P60.50

Fittings & accessories	Part No.
Fitting 1/8"NPSF female	06UA
Adjustable support for P60	33.50.031
Cone valve for P35 & P60	33.50.033

P100

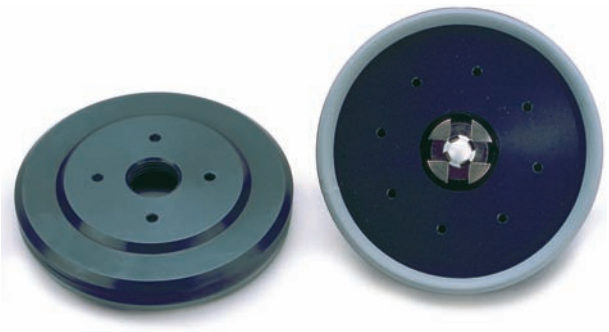

SUCTION CUP WITH CELLULAR RUBBER PROFILE

- Suitable for irregular and rough surfaces.
- Use a ball joint if prone to bending.
- Available with adjustable support for handling thin material. Also suitable for applications requiring accurate positioning.
- Can also be equipped with a cone valve.

LIFTING FORCES & TECHNICAL DATA

Outer Dia	Lifting force vertical to the surface, lbf, at vacuum level			Lifting force parallel to the surface, lbf, at vacuum level			Volume	Min. curve radius	Max. vertical movement	Weight with fitting
in	6 -inHg	18 -inHg	27 -inHg	6 -inHg	18 -inHg	27 -inHg	in³	in	in	oz
4.23	40.5	101	148	—	—	—	3.36	—	0.12	8.32

MATERIAL SPECIFICATIONS

Material	Color	Hardness °Shore A	Temperature range °F
Ethylene propylene, EPDM	Grey	—	-40–212

MATERIAL RESISTANCE

Wear resistance	Oil	Weather & Ozone	Hydrolysis	Gasoline	Concentrated acids	Alcohol	Oxidation
Fair	Poor	Excellent	Good	Poor	Poor	Excellent	Excellent

ORDERING INFORMATION

	Suction cups with fitting	Part No.
A	Suction cup P100 Ethylene propylene, G1/2" female	P100.50.10UA
B	Suction cup P100 Ethylene propylene, G1/2" female, with cone valve	P100.50.10UV
B	Suction cup P100 Ethylene propylene, G1/2" female, with adjustable support	P100.50.10US

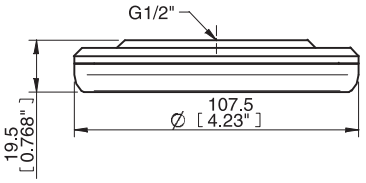

A

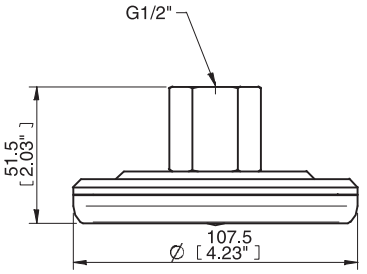

B

Rubber parts	Part No.
Suction cup P100 Ethylene propylene	P100.50

Fittings & accessories	Part No.
Fitting G1/2" female	10UA
Adjustable support for P100	33.50.032
Cone valve for P100	33.50.058

P200

SUCTION CUP WITH CELLULAR RUBBER PROFILE

- Suitable for irregular and rough surfaces
- Use a ball joint if prone to bending.

LIFTING FORCES & TECHNICAL DATA

Outer Dia	Lifting force vertical to the surface, lbf, at vacuum level			Lifting force parallel to the surface, lbf, at vacuum level			Volume	Min. curve radius	Max. vertical movement	Weight with fitting
in	6 -inHg	18 -inHg	27 -inHg	6 -inHg	18 -inHg	27 -inHg	in³	in	in	oz
8.46	169	427	607	—	—	—	33.1	—	0.20	43.9

MATERIAL SPECIFICATIONS

Material	Color	Hardness, °Shore A	Temperature range, °F
Ethylene propylene, EPDM	Grey	—	-40–212

MATERIAL RESISTANCE

Wear resistance	Oil	Weather & Ozone	Hydrolysis	Gasoline	Concentrated acids	Alcohol	Oxidation
Fair	Poor	Excellent	Good	Poor	Poor	Excellent	Excellent

ORDERING INFORMATION

Suction cups with fitting	Part No.
Suction cup P200 Ethylene propylene, G3/4" female	P200.50.20UA

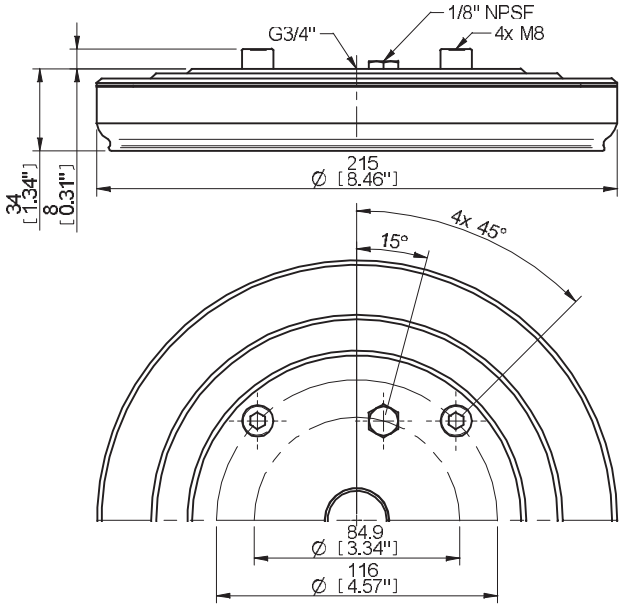

Rubber parts	Part No.
Suction cup P200 Ethylene propylene	P200.50

Fittings & accessories	Part No.
Fitting G3/4" female	20UA
Support kit for suction cups P200 & FP300, (2 kits needed)	01.06.747

P300

SUCTION CUP WITH CELLULAR RUBBER PROFILE

- Suitable for irregular and rough surfaces
- Use a ball joint if prone to bending.

LIFTING FORCES & TECHNICAL DATA

Outer Dia	Lifting force vertical to the surface, lbf, at vacuum level			Lifting force parallel to the surface, lbf, at vacuum level			Volume	Min. curve radius	Max. vertical movement	Weight with fitting
in	6 -inHg	18 -inHg	27 -inHg	6 -inHg	18 -inHg	27 -inHg	in³	in	in	oz
12.4	360	967	1,439	—	—	—	78.4	—	0.20	86.1

MATERIAL SPECIFICATIONS

Material	Color	Hardness, °Shore A	Temperature range, °F
Ethylene propylene, EPDM	Grey	—	-40–212

MATERIAL RESISTANCE

Wear resistance	Oil	Weather & Ozone	Hydrolysis	Gasoline	Concentrated acids	Alcohol	Oxidation
Fair	Poor	Excellent	Good	Poor	Poor	Excellent	Excellent

ORDERING INFORMATION

Suction cups with fitting	Part No.
Suction cup P300 Ethylene propylene, G3/4" female	P300.50.30UA

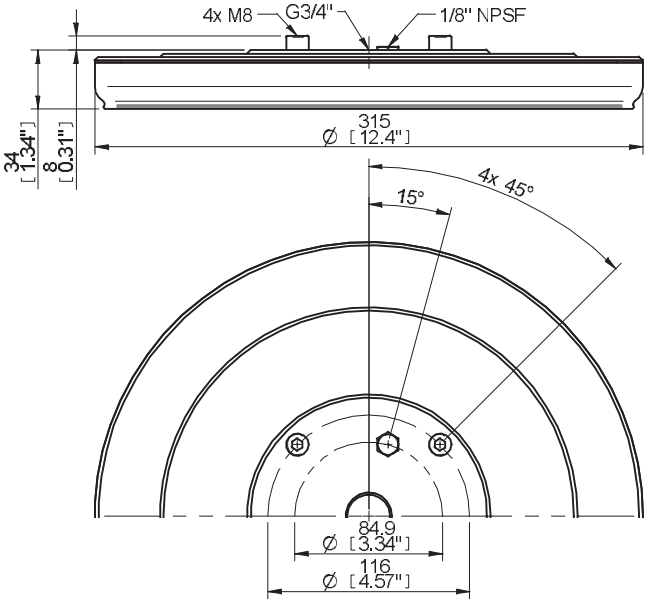

Rubber parts	Part No.
Suction cup P300 Ethylene propylene	P300.50

Fittings & accessories	Part No.
Fitting G3/4" female	30UA
Support kit for suction cup P300, (2 kits needed)	01.06.748

U2 AND U3

UNIVERSAL SUCTION CUP

- Suitable for objects with flat or slightly curved surfaces.
- Also used for concave objects.
- Suction cups of conductive silicone are suitable for objects with sensitivity to static electricity.

LIFTING FORCES & TECHNICAL DATA

Model	Outer Dia	Lifting force vertical to the surface, lbf, at vacuum level			Lifting force parallel to the surface, lbf, at vacuum level			Volume	Min. curve radius	Max. vertical movement	Weight rubber part
	in	6 -inHg	18 -inHg	27 -inHg	6 -inHg	18 -inHg	27 -inHg	in³	in	in	oz
U2	0.10	0.007	0.02	0.03	—	—	—	0.0002	0.16	0.004	0.0004
U3	0.15	0.02	0.09	0.15	—	—	—	0.0003	0.20	0.006	0.001

MATERIAL SPECIFICATIONS

Material	Color	Hardness °Shore A	Temperature range °F
Conductive silicone, CSIL	Black	50	-67–446

MATERIAL RESISTANCE

Wear resistance	Oil	Weather & Ozone	Hydrolysis	Gasoline	Concentrated acids	Alcohol	Oxidation
Good	Poor	Excellent	Fair	Poor	Poor	Good	Excellent

ORDERING INFORMATION

	Suction cups with fitting	Weight (oz)	Part No.
A	Suction cup U2 Conductive silicone, M2.5 male	0.0184	U2.25.01AA
B	Suction cup U3 Conductive silicone, M2.5 male	0.019	U3.25.01AA

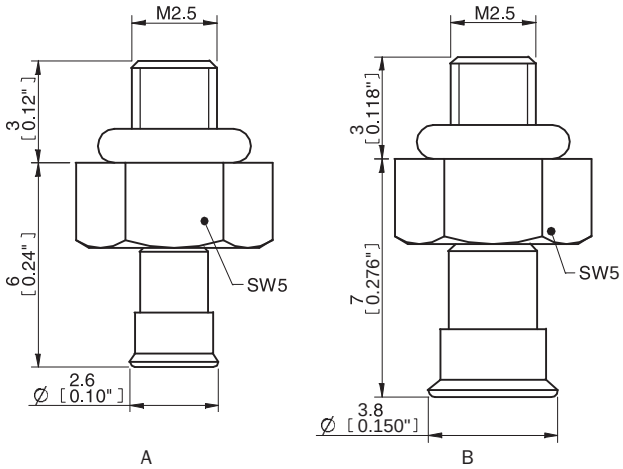

	Rubber parts	Part No.
A	Suction cup U2 Conductive silicone	U2.25
B	Suction cup U3 Conductive silicone	U3.25

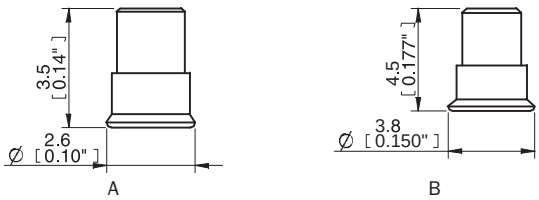

Fittings	Part No.
Fitting M2.5 male	01AA

U4, U6 AND U8

UNIVERSAL SUCTION CUP

- Suitable for objects with flat or slightly curved surfaces.
- Also used for concave objects.

LIFTING FORCES & TECHNICAL DATA

Model	Outer Dia	Lifting force vertical to the surface, lbf, at vacuum level			Lifting force parallel to the surface, lbf, at vacuum level			Volume	Min. curve radius	Max. vertical movement	Weight rubber part
	in	6 -inHg	18 -inHg	27 -inHg	6 -inHg	18 -inHg	27 -inHg	in³	in	in	oz
U4	0.20	0.05	0.20	0.29	0.05	0.18	0.22	0.002	0.12	0.008	0.003
U6	0.28	0.11	0.38	0.56	0.11	0.34	0.45	0.003	0.20	0.012	0.005
U8	0.35	0.22	0.65	0.88	0.22	0.65	0.76	0.006	0.24	0.02	0.006

MATERIAL SPECIFICATIONS

Material	Color	Hardness, °Shore A	Temperature range, °F
Chloroprene, CR	Black	50	-40–230
Silicone, SIL	Red	50	-40–392

MATERIAL RESISTANCE

Material	Wear resistance	Oil	Weather & ozone	Hydrolysis	Gasoline	Concentrated acids	Alcohol	Oxidation
Chloroprene, CR	Excellent	Fair	Good	Good	Fair	Poor	Good	Good
Silicone, SIL	Good	Poor	Excellent	Fair	Poor	Poor	Good	Excellent

ORDERING INFORMATION

	Suction cups with fitting	Weight (oz)	Part No.
A	Suction cup U4 Chloroprene, M5 male	0.014	U4.10.01AB
A	Suction cup U4 Silicone, M5 male	0.014	U4.20.01AB
B	Suction cup U6 Chloroprene, M5 male	0.115	U6.10.01AB
B	Suction cup U6 Silicone, M5 male	0.115	U6.20.01AB
C	Suction cup U8 Chloroprene, M5 male	0.116	U8.10.01AB
C	Suction cup U8 Silicone, M5 male	0.116	U8.20.01AB

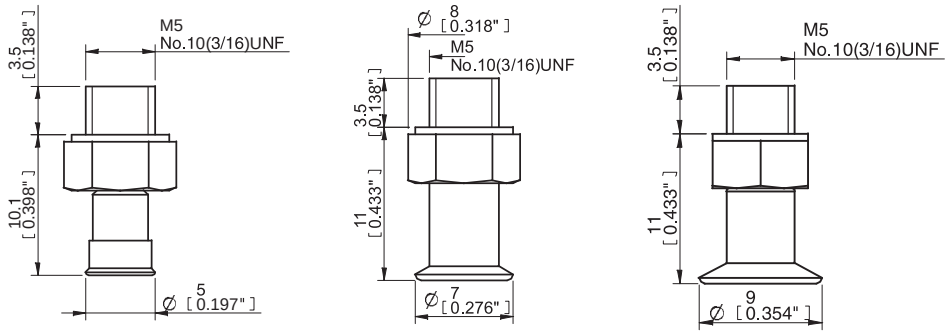

	Rubber parts	Part No.
A	Suction cup U4 Chloroprene	U4.10
A	Suction cup U4 Silicone	U4.20
B	Suction cup U6 Chloroprene	U6.10
B	Suction cup U6 Silicone	U6.20
C	Suction cup U8 Chloroprene	U8.10
C	Suction cup U8 Silicone	U8.20

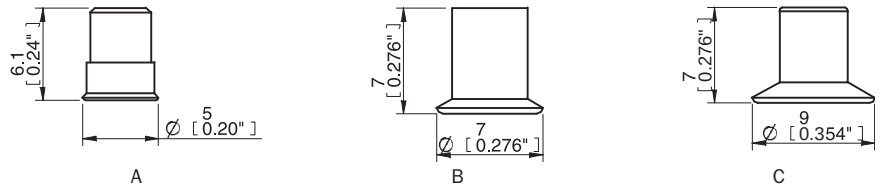

Fittings	Part No.
Fitting M5 male	01AB

U10 AND U15

UNIVERSAL SUCTION CUP

- Suitable for objects with flat or slightly curved surfaces.
- Also used for concave objects.

LIFTING FORCES & TECHNICAL DATA

Model	Outer Dia	Lifting force vertical to the surface, lbf, at vacuum level			Lifting force parallel to the surface, lbf, at vacuum level			Volume	Min. curve radius	Max. vertical movement	Weight rubber part
	in	6 -inHg	18 -inHg	27 -inHg	6 -inHg	18 -inHg	27 -inHg	in³	in	in	oz
U10	0.43	0.34	0.99	1.55	0.34	0.99	1.10	0.01	0.32	0.02	0.02
U15	0.65	0.79	1.89	2.47	0.79	1.21	1.33	0.03	0.31	0.06	0.02

MATERIAL SPECIFICATIONS

Material	Color	Hardness °Shore A	Temperature range °F
Chloroprene, CR	Black	50	-40–230
Silicone, SIL	Red	50	-40–392

MATERIAL RESISTANCE

Material	Wear resistance	Oil	Weather & ozone	Hydrolysis	Gasoline	Concentrated acids	Alcohol	Oxidation
Chloroprene, CR	Excellent	Fair	Good	Good	Fair	Poor	Good	Good
Silicone, SIL	Good	Poor	Excellent	Fair	Poor	Poor	Good	Excellent

ORDERING INFORMATION

	Suction cups with fitting	Weight (oz)	Part No.
A	Suction cup U10 Chloroprene, M5 male	0.16	U10.10.01AC
A	Suction cup U10 Silicone, M5 male	0.16	U10.20.01AC
B	Suction cup U15 Chloroprene, M5 male	0.16	U15.10.01AC
B	Suction cup U15 Silicone, M5 male	0.16	U15.20.01AC

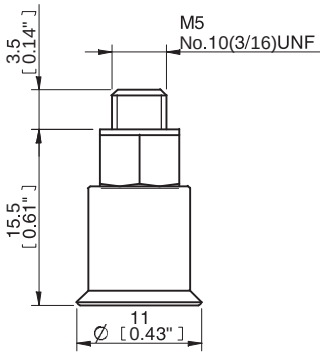

A

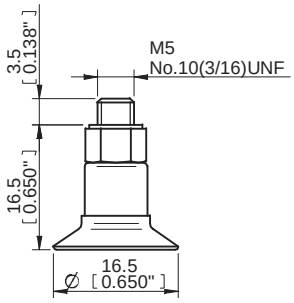

B

	Rubber parts	Part No.
A	Suction cup U10 Chloroprene	U10.10
A	Suction cup U10 Silicone	U10.20
B	Suction cup U15 Chloroprene	U15.10
B	Suction cup U15 Silicone	U15.20

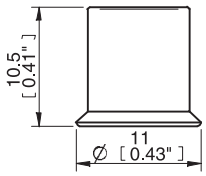

A

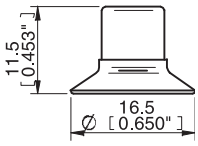

B

Fittings	Part No.
Fitting M5 male	01AC

U20

UNIVERSAL SUCTION CUP

- Suitable for objects with flat or slightly curved surfaces.
- Also used for concave objects.

LIFTING FORCES & TECHNICAL DATA

Outer Dia	Lifting force vertical to the surface, lbf, at vacuum level			Lifting force parallel to the surface, lbf, at vacuum level			Volume	Min. curve radius	Max. vertical movement	Weight rubber part
in	6 -inHg	18 -inHg	27 -inHg	6 -inHg	18 -inHg	27 -inHg	in^3	in	in	oz
0.86	1.33	2.70	3.60	1.33	1.98	2.20	0.06	0.51	0.10	0.04

MATERIAL SPECIFICATIONS

Material	Color	Hardness °Shore A	Temperature range °F
Chloroprene, CR	Black	50	-40–230
Silicone, SIL	Red	50	-40–392

MATERIAL RESISTANCE

Material	Wear resistance	Oil	Weather & ozone	Hydrolysis	Gasoline	Concentrated acids	Alcohol	Oxidation
Chloroprene, CR	Excellent	Fair	Good	Good	Fair	Poor	Good	Good
Silicone, SIL	Good	Poor	Excellent	Fair	Poor	Poor	Good	Excellent

ORDERING INFORMATION

	Suction cups with fitting	Weight (oz)	Part No.
A	Suction cup U20 Chloroprene, M5 female	0.15	U20.10.02AA
A	Suction cup U20 Chloroprene, M5 female, with dual flow control valve	0.15	U20.10.02DA
B	Suction cup U20 Chloroprene, G1/8" male, with mesh filter	0.15	U20.10.02AB
B	Suction cup U20 Chloroprene, G1/8" male, with dual flow control valve	0.15	U20.10.02DB
B	Suction cup U20 Chloroprene, 1/8" NPT male, with mesh filter	0.15	U20.10.02AC
B	Suction cup U20 Chloroprene, 1/8" NPT male, with dual flow control valve	0.15	U20.10.02DC
C	Suction cup U20 Chloroprene, G1/8" male/M5 female	0.11	U20.10.02AD
C	Suction cup U20 Chloroprene, G1/8" male/M5 female, with mesh filter	0.11	U20.10.02AF
C	Suction cup U20 Chloroprene, G1/8" male/M5 female, with dual flow control valve	0.11	U20.10.02DD
D	Suction cup U20 Chloroprene, 5xM5 female	0.39	U20.10.02AE
D	Suction cup U20 Chloroprene, 5xM5 female, with dual flow control valve	0.39	U20.10.02DE
E	Suction cup U20 Chloroprene, G1/8" male/M5 female, PA	0.10	U20.10.02CD
A	Suction cup U20 Silicone, M5 female	0.15	U20.20.02AA
A	Suction cup U20 Silicone, M5 female, with dual flow control valve	0.15	U20.20.02DA
B	Suction cup U20 Silicone, G1/8" male, with mesh filter	0.15	U20.20.02AB
B	Suction cup U20 Silicone, G1/8" male, with dual flow control valve	0.15	U20.20.02DB
B	Suction cup U20 Silicone, 1/8" NPT male, with mesh filter	0.15	U20.20.02AC
B	Suction cup U20 Silicone, 1/8" NPT male, with dual flow control valve	0.15	U20.20.02DC
C	Suction cup U20 Silicone, G1/8" male/M5 female	0.11	U20.20.02AD
C	Suction cup U20 Silicone, G1/8" male/M5 female, with mesh filter	0.11	U20.20.02AF
C	Suction cup U20 Silicone, G1/8" male/M5 female, with dual flow control valve	0.11	U20.20.02DD
D	Suction cup U20 Silicone, 5xM5 female	0.39	U20.20.02AE
D	Suction cup U20 Silicone, 5xM5 female, with dual flow control valve	0.39	U20.20.02DE
E	Suction cup U20 Silicone, G1/8" male/M5 female, PA	0.10	U20.20.02CD

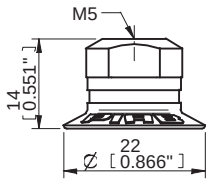

A

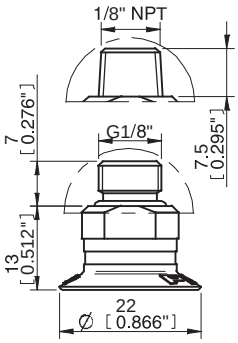

B

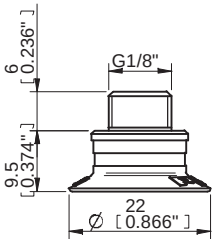

C

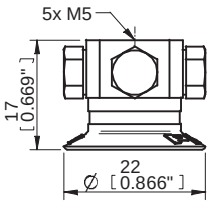

D

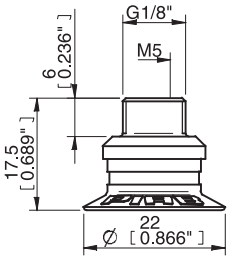

E

Rubber parts	Part No.
Suction cup U20 Chloroprene	U20.10
Suction cup U20 Silicone	U20.20

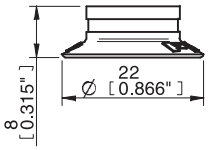

Fittings	Part No.
Fitting M5 female	02AA
Fitting M5 female, with dual flow control valve	02DA
Fitting G1/8" male, with mesh filter	02AB
Fitting G1/8" male, with mesh filter and dual flow control valve	02DB
Fitting 1/8" NPT male, with mesh filter	02AC
Fitting 1/8" NPT male, with dual flow control valve	02DC
Fitting G1/8" male/M5 female	02AD
Fitting G1/8" male/M5 female, with mesh filter	02AF
Fitting G1/8" male/M5 female, with dual flow control valve	02DD
Fitting 5xM5 female	02AE
Fitting 5xM5 female, with dual flow control valve	02DE
Fitting G1/8" male/M5 female, PA	02CD

U30

UNIVERSAL SUCTION CUP

- Suitable for objects with flat or slightly curved surfaces.
- Also used for concave objects.

LIFTING FORCES & TECHNICAL DATA

Outer Dia	Lifting force vertical to the surface, lbf, at vacuum level			Lifting force parallel to the surface, lbf, at vacuum level			Volume	Min. curve radius	Max. vertical movement	Weight rubber part
in	6 -inHg	18 -inHg	27 -inHg	6 -inHg	18 -inHg	27 -inHg	in³	in	in	oz
1.26	2.70	5.62	6.74	1.75	2.20	2.47	0.12	0.79	0.13	0.06

MATERIAL SPECIFICATIONS

Material	Color	Hardness °Shore A	Temperature range °F
Chloroprene, CR	Black	50	-40–230
Silicone, SIL	Red	50	-40–392

MATERIAL RESISTANCE

Material	Wear resistance	Oil	Weather & Ozone	Hydrolysis	Gasoline	Concentrated acids	Alcohol	Oxidation
Nitrile-PVC, NPV	Excellent	Excellent	Good	Good	Excellent	Fair	Good	Good
Silicone, SIL	Good	Poor	Excellent	Fair	Poor	Poor	Good	Excellent

ORDERING INFORMATION

	Suction cups with fitting	Weight (oz)	Part No.
A	Suction cup U30 Nitrile-PVC, M5 female	0.17	U30.30.02AA
A	Suction cup U30 Nitrile-PVC, M5 female, with dual flow control valve	0.17	U30.30.02DA
B	Suction cup U30 Nitrile-PVC, G1/8" male, with mesh filter	0.17	U30.30.02AB
B	Suction cup U30 Nitrile-PVC, G1/8" male, with dual flow control valve	0.17	U30.30.02DB
B	Suction cup U30 Nitrile-PVC, 1/8" NPT male, with mesh filter	0.17	U30.30.02AC
B	Suction cup U30 Nitrile-PVC, 1/8" NPT male, with dual flow control valve	0.17	U30.30.02DC
C	Suction cup U30 Nitrile-PVC, G1/8" male / M5 female	0.13	U30.30.02AD
C	Suction cup U30 Nitrile-PVC, G1/8" male / M5 female, with mesh filter	0.13	U30.30.02AF
C	Suction cup U30 Nitrile-PVC, G1/8" male / M5 female, with dual flow control valve	0.13	U30.30.02DD
D	Suction cup U30 Nitrile-PVC, 5xM5 female	0.41	U30.30.02AE
D	Suction cup U30 Nitrile-PVC, 5xM5 female, with dual flow control valve	0.41	U30.30.02DE
E	Suction cup U30 Nitrile-PVC, G1/8" male / M5 female, PA	0.12	U30.30.02CD
A	Suction cup U30 Silicone, M5 female, with mesh filter	0.17	U30.20.02AA
A	Suction cup U30 Silicone, M5 female, with dual flow control valve	0.17	U30.20.02DA
B	Suction cup U30 Silicone, G1/8" male, with mesh filter	0.17	U30.20.02AB
B	Suction cup U30 Silicone, G1/8" male, with dual flow control valve	0.17	U30.20.02DB
B	Suction cup U30 Silicone, 1/8" NPT male, with mesh filter	0.17	U30.20.02AC
B	Suction cup U30 Silicone, 1/8" NPT male, with dual flow control valve	0.17	U30.20.02DC
C	Suction cup U30 Silicone, G1/8" male / M5 female	0.13	U30.20.02AD
C	Suction cup U30 Silicone, G1/8" male / M5 female, with mesh filter	0.13	U30.20.02AF
C	Suction cup U30 Silicone, G1/8" male / M5 female, with dual flow control valve	0.13	U30.20.02DD
D	Suction cup U30 Silicone, 5xM5 female, with mesh filter	0.41	U30.20.02AE
D	Suction cup U30 Silicone, 5xM5 female, with dual flow control valve	0.41	U30.20.02DE
E	Suction cup U30 Silicone, G1/8" male / M5 female, PA	0.12	U30.20.02CD

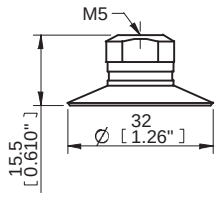

A

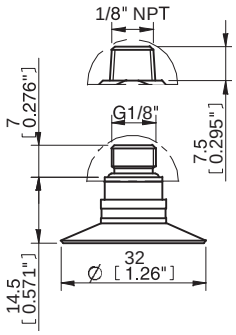

B

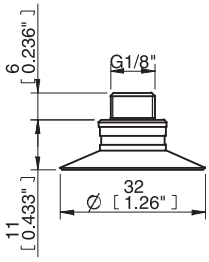

C

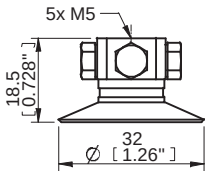

D

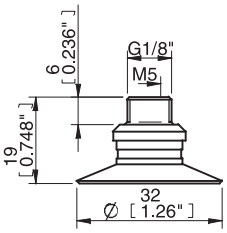

E

Rubber parts	Part No.
Suction cup U30 Nitrile-PVC	U30.30
Suction cup U30 Silicone	U30.20

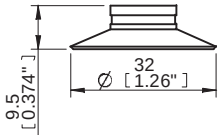

Fittings	Part No.
Fitting M5 female	02AA
Fitting M5 female, with dual flow control valve	02DA
Fitting G1/8" male, with mesh filter	02AB
Fitting G1/8" male, with mesh filter and dual flow control valve	02DB
Fitting 1/8" NPT male, with mesh filter	02AC
Fitting 1/8" NPT male, with dual flow control valve	02DC
Fitting G1/8" male/M5 female	02AD
Fitting G1/8" male/M5 female, with mesh filter	02AF
Fitting G1/8" male/M5 female, with dual flow control valve	02DD
Fitting 5xM5 female	02AE
Fitting 5xM5 female, with dual flow control valve	02DE
Fitting G1/8" male/M5 female, PA	02CD

U40-2

UNIVERSAL SUCTION CUP

- Suitable for objects with flat or slightly curved surfaces.
- Also used for concave objects.

LIFTING FORCES & TECHNICAL DATA

Outer Dia	Lifting force vertical to the surface, lbf, at vacuum level			Lifting force parallel to the surface, lbf, at vacuum level			Volume	Min. curve radius	Max. vertical movement	Weight rubber part
in	6 -inHg	18 -inHg	27 -inHg	6 -inHg	18 -inHg	27 -inHg	in³	in	in	oz
1.61	4.50	8.77	11.0	3.15	4.95	6.07	0.33	1.18	0.18	0.14

MATERIAL SPECIFICATIONS

Material	Color	Hardness °Shore A	Temperature range °F
Chloroprene, CR	Black	50	-40–230
Silicone, SIL	Red	50	-40–392

MATERIAL RESISTANCE

Material	Wear resistance	Oil	Weather & Ozone	Hydrolysis	Gasoline	Concentrated acids	Alcohol	Oxidation
Nitrile-PVC, NPV	Excellent	Excellent	Good	Good	Excellent	Fair	Good	Good
Silicone, SIL	Good	Poor	Excellent	Fair	Poor	Poor	Good	Excellent

ORDERING INFORMATION

	Suction cups with fitting	Weight	Part No.
A	Suction cup U40-2 Nitrile-PVC, 1/8"NPSF female	0.35	U40-2.30.04AA
A	Suction cup U40-2 Nitrile-PVC, 1/8"NPSF female, with mesh filter	0.35	U40-2.30.04AG
A	Suction cup U40-2 Nitrile-PVC, 1/8"NPSF female, with dual flow control valve	0.35	U40-2.30.04DA
B	Suction cup U40-2 Nitrile-PVC, G1/4" male, with mesh filter	0.39	U40-2.30.04AB
B	Suction cup U40-2 Nitrile-PVC, G1/4" male, with dual flow control valve	0.39	U40-2.30.04DB
B	Suction cup U40-2 Nitrile-PVC, 1/4" NPT male, with mesh filter	0.39	U40-2.30.04AC
B	Suction cup U40-2 Nitrile-PVC, 1/4" NPT male, with dual flow control valve	0.39	U40-2.30.04DC
C	Suction cup U40-2 Nitrile-PVC, G3/8" male, with mesh filter	0.49	U40-2.30.04AD
C	Suction cup U40-2 Nitrile-PVC, G3/8" male, with dual flow control valve	0.49	U40-2.30.04DD
C	Suction cup U40-2 Nitrile-PVC, 3/8" NPT male, with mesh filter	0.49	U40-2.30.04AE
C	Suction cup U40-2 Nitrile-PVC, 3/8" NPT male, with dual flow control valve	0.49	U40-2.30.04DE
D	Suction cup U40-2 Nitrile-PVC, 5x1/8"NPSF female	0.85	U40-2.30.04AF
D	Suction cup U40-2 Nitrile-PVC, 5x1/8"NPSF female, with dual flow control valve	0.85	U40-2.30.04DF
E	Suction cup U40-2 Nitrile-PVC, 1/8" NPSF female, PA	0.22	U40-2.30.04AH
A	Suction cup U40-2 Silicone, 1/8"NPSF female	0.35	U40-2.20.04AA
A	Suction cup U40-2 Silicone, 1/8"NPSF female, with mesh filter	0.35	U40-2.20.04AG
A	Suction cup U40-2 Silicone, 1/8"NPSF female, with dual flow control valve	0.35	U40-2.20.04DA
B	Suction cup U40-2 Silicone, G1/4" male, with mesh filter	0.39	U40-2.20.04AB
B	Suction cup U40-2 Silicone, G1/4" male, with dual flow control valve	0.39	U40-2.20.04DB
B	Suction cup U40-2 Silicone, 1/4" NPT male, with mesh filter	0.39	U40-2.20.04AC
B	Suction cup U40-2 Silicone, 1/4" NPT male, with dual flow control valve	0.39	U40-2.20.04DC
C	Suction cup U40-2 Silicone, G3/8" male, with mesh filter	0.49	U40-2.20.04AD
C	Suction cup U40-2 Silicone, G3/8" male, with dual flow control valve	0.49	U40-2.20.04DD
C	Suction cup U40-2 Silicone, 3/8" NPT male, with mesh filter	0.49	U40-2.20.04AE
C	Suction cup U40-2 Silicone, 3/8" NPT male, with dual flow control valve	0.49	U40-2.20.04DE
D	Suction cup U40-2 Silicone, 5x1/8"NPSF female	0.85	U40-2.20.04AF

	Suction cups with fitting	Weight	Part No.
D	Suction cup U40-2 Silicone, 5x1/8"NPSF female, with dual flow control valve	0.85	U40-2.20.04DF
E	Suction cup U40-2 Silicone, 1/8" NPSF female, PA	0.22	U40-2.20.04AH

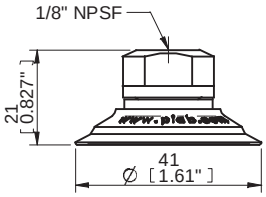

A

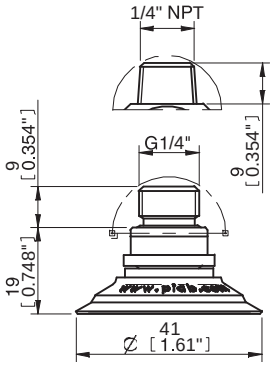

B

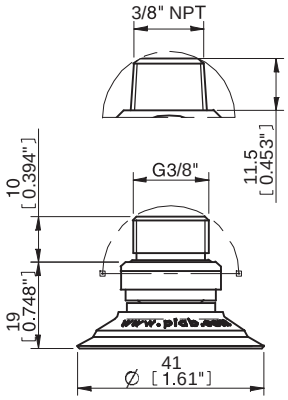

C

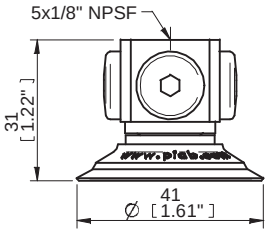

D

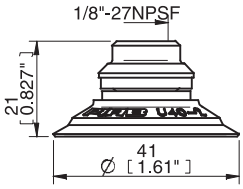

E

Rubber parts	Part No.
Suction cup U40-2 Nitrile-PVC	U40-2.30
Suction cup U40-2 Silicone	U40-2.20

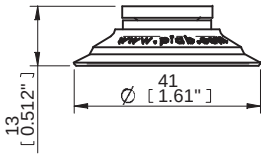

Fittings	Part No.
Fitting 1/8"NPSF female	04AA
Fitting 1/8"NPSF female, with mesh filter	04AG
Fitting 1/8"NPSF female, with dual flow control valve	04DA
Fitting G1/4" male, with mesh filter	04AB
Fitting G1/4" male, with dual flow control valve	04DB
Fitting 1/4" NPT male, with mesh filter	04AC
Fitting 1/4" NPT male, with dual flow control valve	04DC
Fitting G3/8" male, with mesh filter	04AD
Fitting G3/8" male, with dual flow control valve	04DD
Fitting 3/8" NPT male, with mesh filter	04AE
Fitting 3/8" NPT male, with dual flow control valve	04DE
Fitting 5x1/8"NPSF female	04AF
Fitting 5x1/8"NPSF female, with dual flow control valve	04DF
Fitting 1/8"NPSF female, PA	04AH

U50-2

UNIVERSAL SUCTION CUP

- Suitable for objects with flat or slightly curved surfaces.
- Also used for concave objects.

LIFTING FORCES & TECHNICAL DATA

Outer Dia	Lifting force vertical to the surface, lbf, at vacuum level			Lifting force parallel to the surface, lbf, at vacuum level			Volume	Min. curve radius	Max. vertical movement	Weight rubber part
in	6 -inHg	18 -inHg	27 -inHg	6 -inHg	18 -inHg	27 -inHg	in³	in	in	oz
2.02	7.87	16.4	20.7	4.50	8.32	9.89	0.73	1.38	0.24	0.35

MATERIAL SPECIFICATIONS

Material	Color	Hardness °Shore A	Temperature range °F
Chloroprene, CR	Black	50	-40–230
Silicone, SIL	Red	50	-40–392

MATERIAL RESISTANCE

Material	Wear resistance	Oil	Weather & Ozone	Hydrolysis	Gasoline	Concentrated acids	Alcohol	Oxidation
Nitrile-PVC, NPV	Excellent	Excellent	Good	Good	Excellent	Fair	Good	Good
Silicone, SIL	Good	Poor	Excellent	Fair	Poor	Poor	Good	Excellent

ORDERING INFORMATION

	Suction cups with fitting	Weight (oz)	Part No.
A	Suction cup U50-2 Nitrile-PVC, 1/8"NPSF female	0.70	U50-2.30.05AA
A	Suction cup U50-2 Nitrile-PVC, 1/8"NPSF female, with mesh filter	0.70	U50-2.30.05AG
A	Suction cup U50-2 Nitrile-PVC, 1/8"NPSF female, with dual flow control valve	0.70	U50-2.30.05DA
B	Suction cup U50-2 Nitrile-PVC, G1/4" male, with mesh filter	0.70	U50-2.30.05AB
B	Suction cup U50-2 Nitrile-PVC, G1/4" male, with dual flow control valve	0.70	U50-2.30.05DB
B	Suction cup U50-2 Nitrile-PVC, 1/4" NPT male, with mesh filter	0.70	U50-2.30.05AC
B	Suction cup U50-2 Nitrile-PVC, 1/4" NPT male, with dual flow control valve	0.70	U50-2.30.05DC
C	Suction cup U50-2 Nitrile-PVC, G3/8" male, with mesh filter	0.70	U50-2.30.05AD
C	Suction cup U50-2 Nitrile-PVC, G3/8" male, with dual flow control valve	0.70	U50-2.30.05DD
C	Suction cup U50-2 Nitrile-PVC, 3/8" NPT male, with mesh filter	0.70	U50-2.30.05AE
C	Suction cup U50-2 Nitrile-PVC, 3/8" NPT male, with dual flow control valve	0.70	U50-2.30.05DE
D	Suction cup U50-2 Nitrile-PVC, 5x1/8"NPSF female	1.41	U50-2.30.05AF
D	Suction cup U50-2 Nitrile-PVC, 5x1/8"NPSF female, with dual flow control valve	1.41	U50-2.30.05DF
E	Suction cup U50-2 Nitrile-PVC, 1/8"NPSF female, PA	0.55	U50-2.30.05CA
A	Suction cup U50-2 Silicone, 1/8"NPSF female	0.70	U50-2.20.05AA
A	Suction cup U50-2 Silicone, 1/8"NPSF female, with mesh filter	0.70	U50-2.20.05AG

	Suction cups with fitting	Weight (oz)	Part No.
A	Suction cup U50-2 Silicone, 1/8"NPSF female, with dual flow control valve	0.70	U50-2.20.05DA
B	Suction cup U50-2 Silicone, G1/4" male, with mesh filter	0.70	U50-2.20.05AB
B	Suction cup U50-2 Silicone, G1/4" male, with dual flow control valve	0.70	U50-2.20.05DB
B	Suction cup U50-2 Silicone, 1/4" NPT male, with mesh filter	0.70	U50-2.20.05AC
B	Suction cup U50-2 Silicone, 1/4" NPT male, with dual flow control valve	0.70	U50-2.20.05DC
C	Suction cup U50-2 Silicone, G3/8" male, with mesh filter	0.70	U50-2.20.05AD
C	Suction cup U50-2 Silicone, G3/8" male, with dual flow control valve	0.70	U50-2.20.05DD
C	Suction cup U50-2 Silicone, 3/8" NPT male, with mesh filter	0.70	U50-2.20.05AE
C	Suction cup U50-2 Silicone, 3/8" NPT male, with dual flow control valve	0.70	U50-2.20.05DE
D	Suction cup U50-2 Silicone, 5x1/8"NPSF female	1.41	U50-2.20.05AF
D	Suction cup U50-2 Silicone, 5x1/8"NPSF female, with dual flow control valve	1.41	U50-2.20.05DF
E	Suction cup U50-2 Silicone, 1/8"NPSF female, PA	0.55	U50-2.20.05CA

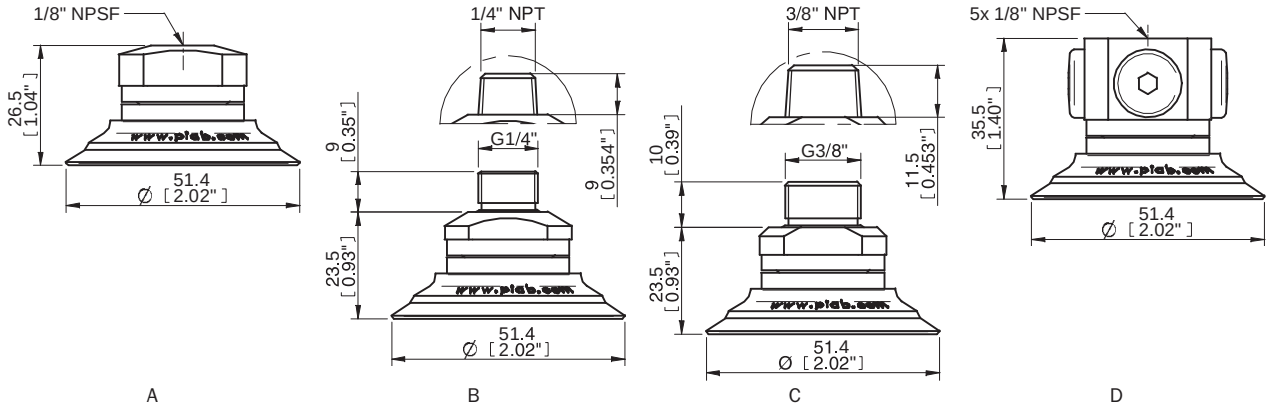

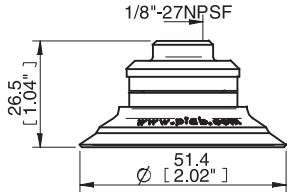

Rubber parts	Part No.
Suction cup U50-2 Nitrile-PVC	U50-2.30
Suction cup U50-2 Silicone	U50-2.20

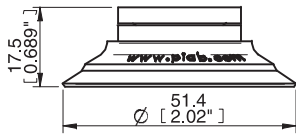

Fittings	Part No.
Fitting 1/8"NPSF female	05AA
Fitting 1/8"NPSF female, with mesh filter	05AG
Fitting 1/8"NPSF female, with dual flow control valve	05DA
Fitting G1/4" male, with mesh filter	05AB
Fitting G1/4" male, with dual flow control valve	05DB
Fitting 1/4" NPT male, with mesh filter	05AC
Fitting 1/4" NPT male, with dual flow control valve	05DC
Fitting G3/8" male, with mesh filter	05AD
Fitting G3/8" male, with mesh filter and dual flow control valve	05DD
Fitting 3/8" NPT male, with mesh filter	05AE
Fitting 3/8" NPT male, with dual flow control valve	05DE
Fitting 5x1/8"NPSF female	05AF
Fitting 5x1/8"NPSF female, with dual flow control valve	05DF
Fitting 1/8"NPSF female, PA	05CA

SUCTION CUP FITTINGS

Description	Material	Temperature range	Weight oz	Part No.	Suits suction cups
M2.5 male	CuZn/NBR	-4°F–194°F	0.018	01AA	U2, U3
M5 male	CuZn/PA	-40°F–230°F	0.11	01AB	B5, B8, U4, U6, U8
M5 male	CuZn/PA	-40°F–230°F	0.14	01AC	B10-2, B15-2, B15MF, D15-2, F15, F15MF, U10, U15
M5 female	Al	-4°F–248°F	0.11	02AA	B20, B20MF, BL20-2, BX25P, D20-2, F20, B30, F20MF, U20, F25, F25MF, FC20P, FC25P, D30-2, F30-2, F30MF, U30
M5 female with dual-flow control valve	Al/PUR	32°F–176°F	0.11	02DA	B20, B20MF, BL20-2, BX25P, D20-2, F20, B30, F20MF, U20, F25, F25MF, FC20P, FC25P, D30-2, F30-2, F30MF, U30
G1/8" male with mesh filter	Al/SS/NBR	-4°F–194°F	0.11	02AB	B20, B20MF, BL20-2, BX25P, D20-2, F20, B30, F20MF, U20, F25, F25MF, FC20P, FC25P, D30-2, F30-2, F30MF, U30
G1/8" male/M5 female	PA	-40°F–230°F	0.06	02CD	B20, BL20-2, D20-2, F20, B30, U20, F25, D30-2, F30-2, U30
G1/8" male with dual-flow control valve	Al/SS/NBR/PUR	32°F–176°F	0.11	02DB	B20, B20MF, BL20-2, BX25P, D20-2, F20, B30, F20MF, U20, F25, F25MF, FC20P, FC25P, D30-2, F30-2, F30MF, U30
1/8"NPT male with mesh filter	Al/SS/NBR	-4°F–194°F	0.11	02AC	B20, B20MF, BL20-2, BX25P, D20-2, F20, B30, F20MF, U20, F25, F25MF, FC20P, FC25P, D30-2, F30-2, F30MF, U30
1/8" NPT male with dual-flow control valve	Al/SS/NBR/PUR	32°F–176°F	0.11	02DC	B20, B20MF, BL20-2, BX25P, D20-2, F20, B30, F20MF, U20, F25, F25MF, FC20P, FC25P, D30-2, F30-2, F30MF, U30
G1/8" male/M5 female	Al	-4°F–248°F	0.07	02AD	B20, B20MF, BL20-2, BX25P, D20-2, F20, B30, F20MF, U20, F25, F25MF, FC20P, FC25P, D30-2, F30-2, F30MF, U30
G1/8" male/M5 female with mesh filter	Al/SS	-4°F–248°F	0.07	02AF	B20, B20MF, BL20-2, BX25P, D20-2, F20, B30, F20MF, U20, F25, F25MF, FC20P, FC25P, D30-2, F30-2, F30MF, U30
G1/8" male/M5 female with dual-flow control valve	Al/PUR	32°F–176°F	0.07	02DD	B20, B20MF, BL20-2, BX25P, D20-2, F20, B30, F20MF, U20, F25, F25MF, FC20P, FC25P, D30-2, F30-2, F30MF, U30
G1/8" male/M5 female with cone valve	Al/SS/NBR	-4°F–194°F	0.14	02UV	F30-2
1/8" NPSF female	Al	-4°F–248°F	0.21	04AA	B30-2, B30MF, BL30-2, BX35P, B40, B40MF, BL40-2, F40-2, F40MF, U40-2, FC35P
1/8" NPSF female with mesh filter	Al/SS	-4°F–248°F	0.21	04AG	B30-2, B30MF, BL30-2, BX35P, B40, B40MF, BL40-2, F40-2, F40MF, U40-2, FC35P
1/8" NPSF female	PA	-40°F–230°F	0.08	04AH	B30-2, BL30-2, B40, BL40-2, F40-2, U40-2
1/8" NPSF female with dual flow control valve	Al/PUR	32°F–176°F	0.21	04DA	B30-2, B30MF, BL30-2, BX35P, B40, B40MF, BL40-2, F40-2, F40MF, U40-2, FC35P
1/8" NPSF female with cone valve	Al/SS/NBR	-4°F–194°F	0.25	04UV	F40-2
1/8" NPSF female	Al	-4°F–248°F	0.35	05AA	B50, B50-2, BX52P, B50MF, BL50-2, D50, F50-2, F50MF, U50-2
1/8" NPSF female with mesh filter	Al/SS	-4°F–248°F	0.35	05AG	B50, B50-2, BX52P, B50MF, BL50-2, D50, F50-2, F50MF, U50-2
1/8" NPSF female	PA	-40°F–230°F	0.20	05CA	B50, B50-2, BL50-2, D50, F50-2, U50-2
1/8" NPSF female with dual flow control valve	Al/PUR	32°F–176°F	0.35	05DA	B50, B50-2, BX52P, B50MF, BL50-2, D50, F50-2, F50MF, U50-2
1/8" NPSF female with cone valve	Al/SS/NBR	-4°F–194°F	0.53	05UV	F50-2
G1/4" male with mesh filter	Al/SS/NBR	-4°F–194°F	0.25	04AB	B30-2, B30MF, BL30-2, BX35P, B40, B40MF, BL40-2, F40-2, F40MF, U40-2, FC35P
G1/4" male with dual-flow control valve	Al/SS/NBR/PUR	32°F–176°F	0.25	04DB	B30-2, B30MF, BL30-2, BX35P, B40, B40MF, BL40-2, F40-2, F40MF, U40-2, FC35P
1/4" NPT male with mesh filter	Al/SS/NBR	-4°F–194°F	0.25	04AC	B30-2, B30MF, BL30-2, BX35P, B40, B40MF, BL40-2, F40-2, F40MF, U40-2, FC35P
1/4" NPT male with dual-flow control valve	Al/SS/NBR/PUR	32°F–176°F	0.25	04DC	B30-2, B30MF, BL30-2, BX35P, B40, B40MF, BL40-2, F40-2, F40MF, U40-2, FC35P
G1/4" male with mesh filter	Al/SS/NBR	-4°F–194°F	0.35	05AB	B50, B50-2, BX52P, B50MF, BL50-2, D50, F50-2, F50MF, U50-2
G1/4" male with dual-flow control valve	Al/SS/NBR/PUR	32°F–176°F	0.35	05DB	B50, B50-2, BX52P, B50MF, BL50-2, D50, F50-2, F50MF, U50-2

Description	Material	Temperature range	Weight oz	Part No.	Suits suction cups
1/4" NPT male with mesh filter	Al/SS/NBR	-4°F–194°F	0.35	05AC	B50, B50-2, BX52P, B50MF, BL50-2, D50, F50-2, F50MF, U50-2
1/4" NPT male with dual-flow control valve	Al/SS/NBR/PUR	32°F–176°F	0.35	05DC	B50, B50-2, BX52P, B50MF, BL50-2, D50, F50-2, F50MF, U50-2
G3/8" male with mesh filter	Al/SS/NBR	-4°F–194°F	0.35	04AD	B30-2, B30MF, BL30-2, BX35P, B40, B40MF, BL40-2, F40-2, F40MF, U40-2, FC35P
G3/8" male with dual-flow control valve	Al/SS/NBR/PUR	32°F–176°F	0.35	04DD	B30-2, B30MF, BL30-2, BX35P, B40, B40MF, BL40-2, F40-2, F40MF, U40-2, FC35P
3/8" NPT male with mesh filter	Al/SS/NBR	-4°F–194°F	0.35	04AE	B30-2, B30MF, BL30-2, BX35P, B40, B40MF, BL40-2, F40-2, F40MF, U40-2, FC35P
3/8" NPT male with dual-flow control valve	Al/SS/NBR/PUR	32°F–176°F	0.35	04DE	B30-2, B30MF, BL30-2, BX35P, B40, B40MF, BL40-2, F40-2, F40MF, U40-2, FC35P
G3/8" male with mesh filter	Al/SS/NBR	-4°F–194°F	0.35	05AD	B50, B50-2, BX52P, B50MF, BL50-2, D50, F50-2, F50MF, U50-2
G3/8" male with dual-flow control valve	Al/SS/NBR/PUR	32°F–176°F	0.35	05DD	B50, B50-2, BX52P, B50MF, BL50-2, D50, F50-2, F50MF, U50-2
3/8" NPT male with mesh filter	Al/SS/NBR	-4°F–194°F	0.35	05AE	B50, B50-2, BX52P, B50MF, BL50-2, D50, F50-2, F50MF, U50-2
3/8" NPT male with dual-flow control valve	Al/SS/NBR/PUR	32°F–176°F	0.35	05DE	B50, B50-2, BX52P, B50MF, BL50-2, D50, F50-2, F50MF, U50-2
G3/8" male	Al/NBR	-4°F–194°F	0.42	04AJ	BL30-3P, BL40-3P
3/8" NPT male	Al	-4°F–248°F	0.42	04AL	BL30-3P, BL40-3P
G1/2" male	Al/NBR	-4°F–194°F	0.49	05AJ	BL50-3P
1/2" NPT male	Al	-4°F–248°F	0.49	05AL	BL50-3P
5xM5 female with mesh filter	Al/CuZn/PA	-4°F–248°F	0.35	02AE	B20, B20MF, BL20-2, BX25P, D20-2, F20, B30, F20MF, U20, F25, F25MF, FC20P, FC25P, D30-2, F30-2, F30MF, U30
5xM5 female with dual flow control valve	Al/CuZn/PA/PUR	32°F–176°F	0.35	02DE	B20, B20MF, BL20-2, BX25P, D20-2, F20, B30, F20MF, U20, F25, F25MF, FC20P, FC25P, D30-2, F30-2, F30MF, U30
5x1/8" NPSF female with mesh filter	Al/PPS/NBR	-4°F–194°F	0.71	04AF	B30-2, B30MF, BL30-2, BX35P, B40, B40MF, BL40-2, F40-2, F40MF, U40-2, FC35P
5x1/8" NPSF female with dual-flow control valve	Al/PPS/NBR/PUR	32°F–176°F	0.71	04DF	B30-2, B30MF, BL30-2, BX35P, B40, B40MF, BL40-2, F40-2, F40MF, U40-2, FC35P
5x1/8" NPSF female with mesh filter	Al/PPS/NBR	-4°F–194°F	1.06	05AF	B50, B50-2, BX52P, B50MF, BL50-2, D50, F50-2, F50MF, U50-2
5x1/8" NPSF female with dual-flow control valve	Al/PPS/NBR/PUR	32°F–176°F	1.06	05DF	B50, B50-2, BX52P, B50MF, BL50-2, D50, F50-2, F50MF, U50-2
1/8" NPSF female with mesh filter	Al/SS	-4°F–248°F	2.47	07NA	B75, B75P, B75-2, F75, F75P, FC100P
G3/8" female with mesh filter	Al/SS	-4°F–248°F	2.47	07ND	B75, B75P, B75-2, F75, F75P, FC100P
3/8" NPSF female with mesh filter	Al/SS	-4°F–248°F	2.47	07NE	B75, B75P, B75-2, F75, F75P, FC100P
G1/2" female with mesh filter	Al/SS	-4°F–248°F	2.47	07NF	B75, B75P, B75-2, F75, F75P, FC100P
G3/8" female with cone valve	Al/SS/NBR	-4°F–194°F	2.65	07VD	F75
G1/2" female with cone valve	Al/SS/NBR	-4°F–194°F	2.65	07VF	F75
1/8" NPSF female with mesh filter	Al/SS	-4°F–248°F	1.99	07UA	B75, B75-2, F75
3/8" NPSF female with mesh filter	Al/SS	-4°F–248°F	2.56	07UB	B75, B75-2, F75
G3/8" female with mesh filter	PPS/SS	-4°F–248°F	1.41	07UC	B75, B75-2, F75
G1/2" female with mesh filter	Al/SS	-4°F–248°F	2.43	07UD	B75, B75-2, F75
G1/2" female with mesh filter	PPS/SS	-4°F–248°F	1.20	07UE	B75, B75-2, F75
1/4" NPT female with mesh filter & 10-32 addl. conn.	Al/SS/Brass	-4°F–248°F	2.71	07UH	B75, B75-2, F75
1/8" NPSF female with mesh filter & 10-32 addl. conn.	Al/SS/Brass	-4°F–248°F	2.05	07UI	B75, B75-2, F75
3/8" NPSF female with mesh filter	PPS/SS	-4°F–248°F	1.41	07UU	B75, B75-2, F75
G1/2" female with cone valve	PPS/SS	-4°F–248°F	1.45	07UV	F75
1/8" NPSF female with cone valve & 10-32 addl. conn	Al/SS/NBR/Brass	-4°F–194°F	2.69	07XV	F75
G3/8" female with mesh filter	Al/SS/CuZn	-4°F–248°F	8.46	11NA	B110, B110-2, F110, F110P, FC150P
3/8" NPSF female with mesh filter	Al/SS/CuZn	-4°F–248°F	8.46	11NB	B110, B110-2, F110, F110P, FC150P
G1/2" female with mesh filter	Al/SS/CuZn	-4°F–248°F	8.46	11NC	B110, B110-2, F110, F110P, FC150P
G1/2" female with cone valve	Al/SS/CuZn/NBR	-4°F–194°F	10.2	11VC	F110
G1/2" female with mesh filter	Al/SS/CuZn	-4°F–248°F	4.81	11UA	B110, B110-2, F110
G1/2" female with mesh filter	Al/SS/CuZn	-4°F–248°F	12.5	15NA	B150, F150
G3/4" female with mesh filter	Al/SS/CuZn	-4°F–248°F	12.5	15NB	B150, F150
G1/2" female with cone valve	Al/SS/CuZn/NBR	-4°F–194°F	14.6	15VA	F150
G1/2" female with mesh filter	Al/SS/CuZn	-4°F–248°F	9.75	15UA	B150, F150
G1/2" female with cone valve	Al/SS/CuZn/NBR	-4°F–194°F	11.9	15UV	F150

LEVEL COMPENSATORS

- Adjust differences in levels, for example on lifting devices with several suction cups on a frame.
- A level compensator is often advantageous since it places less demand on exact vertical positioning, for example on a handling robot.
- The level compensator provides a certain degree of shock absorbtion.
- Non-rotating version available for M5 & G1/8" sizes.
- Level Compensator G1/2" with stiffer spring is identical to standard level compensator G1/2" except for thicker spring material. Suits e.g. robot vision systems in applications such as auto-racking.

TECHNICAL DATA

Description	Unit	Value			
		M5	G1/8"	NPT 3/8"	G1/2"
Weight	oz	0.35	2.47	7.52	5.64
Temperature range	°F	-4-248	-4-248	-4-248	-4-194
Stroke	in	0-0.28	0-0.79	0-1.00	0-0.59
Max. Load	lb	6.60	55.0	n/a	110
Material		SS/CuZn	SS/CuZn	SS/CuZn	SS

ORDERING INFORMATION

	Description	Part No.
A	Level compensator M5	33.50.068
A	Level compensator M5/non-rotating	33.50.068NR
B	Level compensator G1/8"	33.50.069
B	Level compensator G1/8"/non-rotating	33.50.069NR
C	Level Compensator 3/8" NPT	33.00.A09
D	Level compensator G1/2"	33.50.071
D	Level compensator G1/2" with stiffer spring	01.14.291

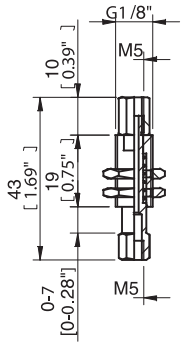

A

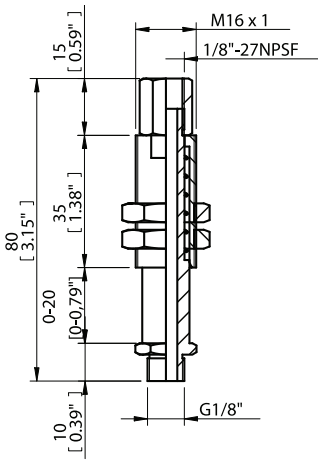

B

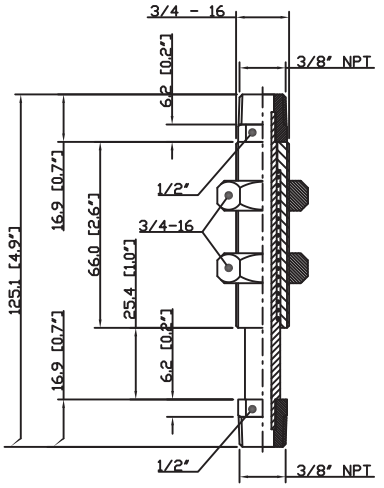

C

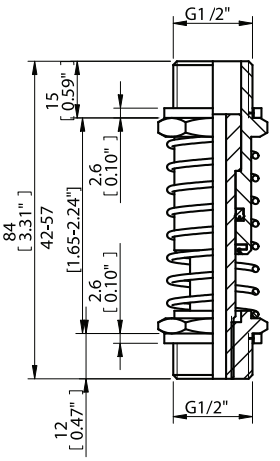

D

LEVEL COMPENSATORS-DELRIN

- Adjust differences in levels, for example on lifting devices with several suction cups on a frame.
- A level compensator is often advantageous since it places less demand on exact vertical positioning, for example on a handling robot.
- The level compensator provides a certain degree of shock absorbtion.
- Lightweight

TECHNICAL DATA

Model	A	B	C	D Travel	E	F	G	H	I
A101IPB	1/8" NPT female	10-32 UNF	2.35	0-.81	1.42	0.47	0.31	0.62	1.22
A102EPB	1/8" NPT male	10-32 UNF	2.64	0-.81	1.42	0.47	0.31	0.62	1.22

ORDERING INFORMATION

Part No.	Fits Cup Sizes	Maximum Load lb.	Materials	Weight oz	Working Temp. F°
A101IPB	20-30*	n/a	Al, Brass, Delrin, Steel	1.3	-40-230
A102EPB	40**-75	n/a	Al, Brass, Delrin, Steel	1.3	-40-230

**Excl. B30-2, B30MF and BL30-2 **Incl. B30-2, B30MF and BL30-2*

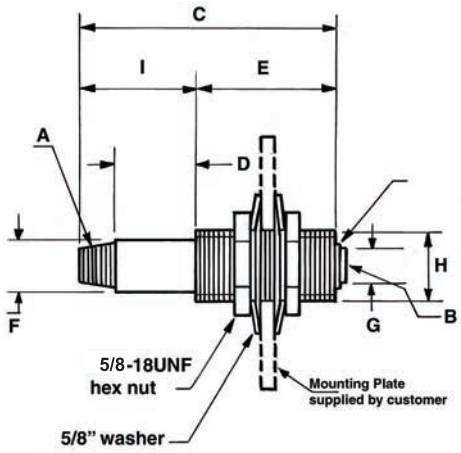

LEVEL COMPENSATOR LC30

- Tailor made for the Vacuum Gripper System, VGS™, but can also be used together with other PIAB products.
- Developed for use with standard profile systems.
- Easy installation with the option of fine adjustments and positioning of the suction cup.
- Non-rotational for use with, for example, oval suction cups. Can easily be made rotational.
- Quiet and reliable level compensation with load protection and shock absorption.

TECHNICAL DATA

Description	Unit	Value
Spring force	lbf	1.12-9.44
Stroke	in	1.18
Weight	oz	7.76
Volume, internal	in^3	0.31
Maximum load, vertical	lbf	157
Temperature range	F°	50-122
Adjustable in height	in	0.47
Adjustable in rotational direction	°	0–360
Material		Al, NBR, PA, POM, PUR, SS

ORDERING INFORMATION

Description	Part No.	Code No.
Level Compensator LC30, 5x plug G1/8" kit	01.11.551	15
Level Compensator LC30	01.11.552	-
Spare part kit LC30	01.11.592	-

LC 30 is delivered with two MC6S M6x45 fzb screws. Spare part kit includes shock absorber, 3 balls for non-rotating function & slide bearing.

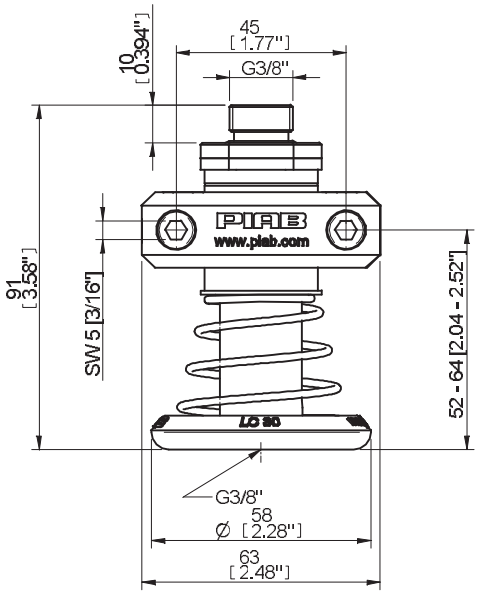

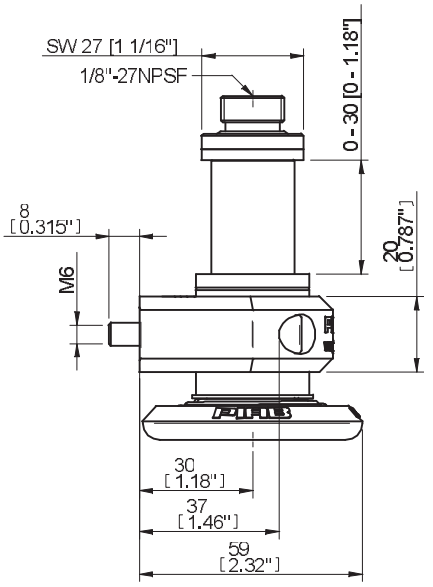

BALL JOINTS

- Ball joint fittings could be used when lifting sheet metal with a device using several suction cups.
- To avoid bending stress a suction cup can be fitted with a balljoint.

TECHNICAL DATA

Description	Unit	Value			
		G1/8"	3/8" NPT	G1/2"	G3/4"
Weight	oz	0.71	4.96	3.88	7.05
Temperature range	°F	-40–230	-40-230	-40–230	-40–230
Angle		±12°	±12°	±12°	±12°
Max. Load	lb	55.0	n/a	110	330
Material		SS/CR/PA/NBR	SS/CR/PA/NBR	SS/CR/PA/NBR	SS/CR/PA/NBR

ORDERING INFORMATION

	Description	Part No.
A	Ball joint G1/8"	33.50.065
B	Ball joint G1/2"	33.50.066
C	Ball joint 3/8"NPT	33.00.A02
D	Ball joint G3/4"	33.50.067

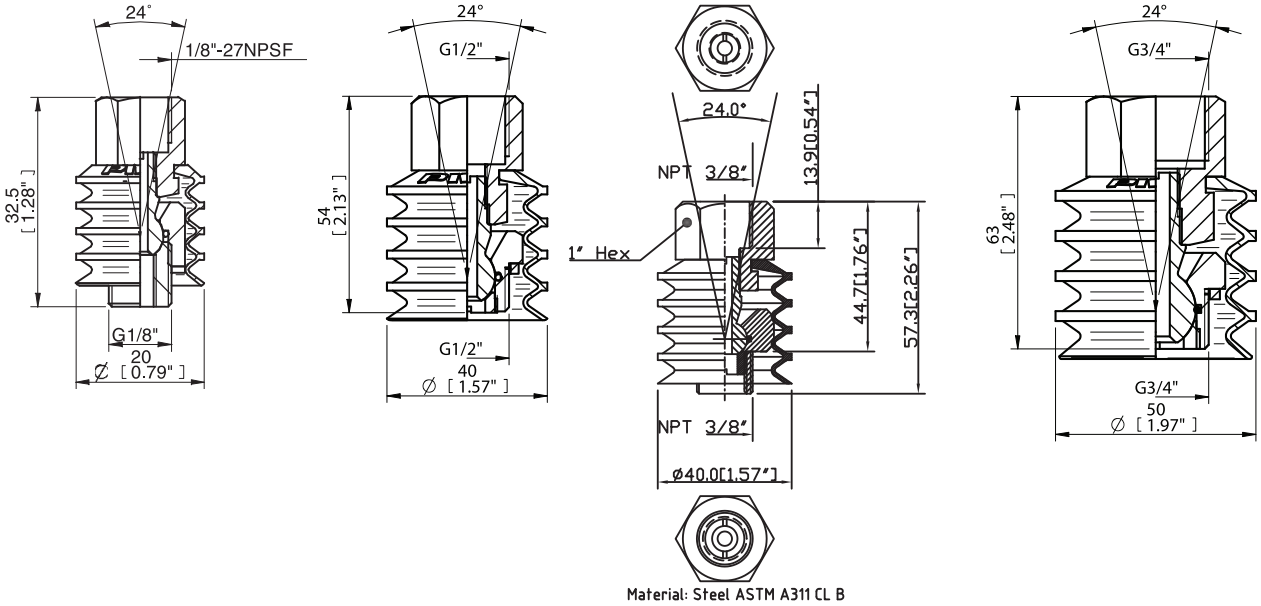

A B C D

ANGLE ADAPTORS

- Angle adaptors facilitate vacuum connections when space and headroom are limited.
- Can also be used as T-connectors.

TECHNICAL DATA

Description	Unit	Value		
		G1/8"	3/8" NPT	G1/2"
Weight	oz	0.71	3.84	4.23
Temperature range	°F	-40–230	-20-200	-40–230
Material		CuZn/NBR/PA	Steel/NBR/Brass	SS/NBR/PA

ORDERING INFORMATION

	Description	Part No.
A	Angle adaptor G1/8" 5/16"–18 UNC	31.50.053U
B	Angle adaptor G1/2" 5/16"–18 UNC	31.50.054U
C	Angle adaptor 3/8"NPT 5/16"-18 UNC	7022

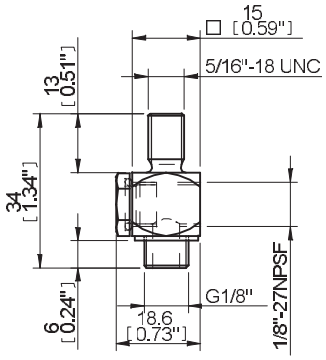

A

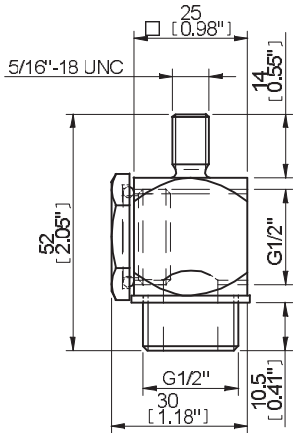

B

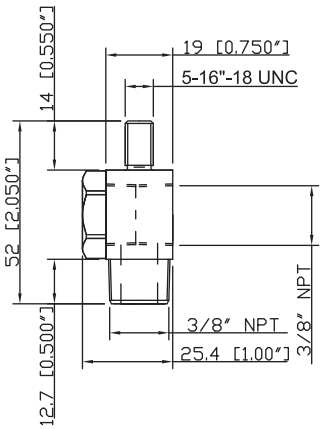

C

T-SLOT ADAPTERS

- The PIAB T-slot adapter enables PIAB suction cups to mount to existing boom assemblies and end-of-arm tooling used in the automotive industry. The T-slot adapter threads into the PIAB cup fitting and can then be mounted accordingly.
- The suction cups can be changed quickly and with great ease.
- Non-rotating feature — good when using oval suction cups.

TECHNICAL DATA

Description	Unit	Value
Weight	oz	0.60-0.78
Working temperature	°F	-4-194
Material		Al/NBR

ORDERING INFORMATION

	Description	Part No.
A	T-slot adapter G1/8" male	01.04.108
B	T-slot adapter G3/8" male	01.04.110
C	T-slot adapter 3/8" NPT	01.04.111
D	T-slot adapter G1/2" male	01.04.112
E	T-slot adapter G3/8" female	01.07.942

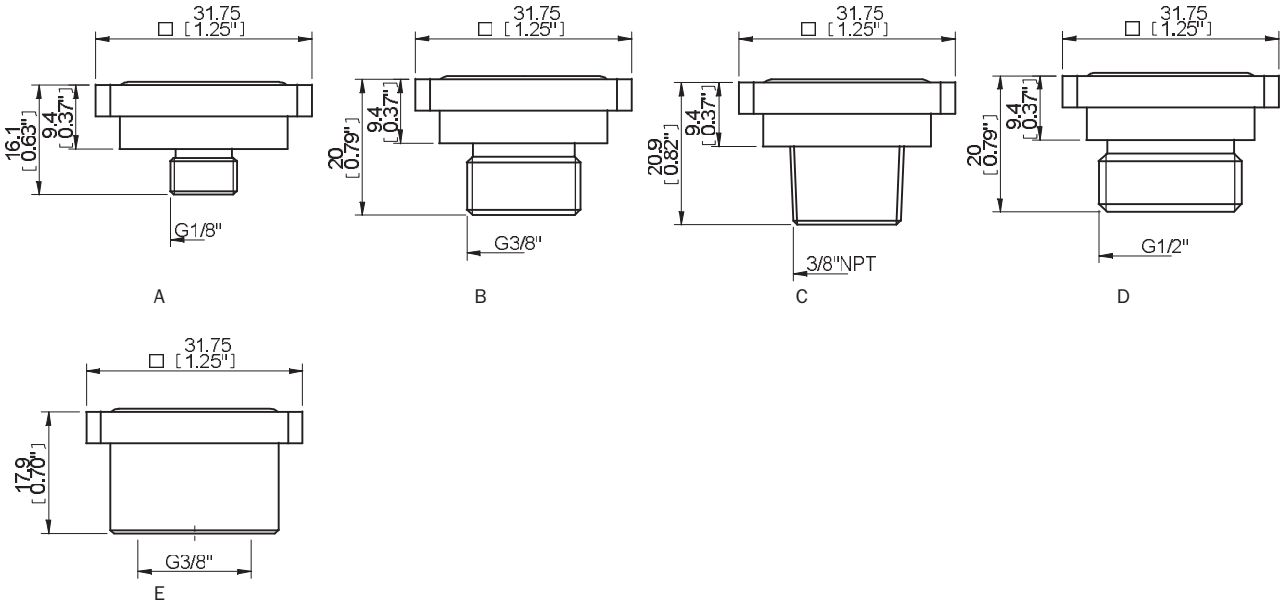

SUCTION CUP SPARE PARTS

Description	Material	Temperature range	Part No.	For Fitting Part No.
Profile material 7.5mm/sold by meter	EPDM	-40°F–212°F	31.50.185	_
Profile material 15mm/sold by meter	EPDM	-40°F–212°F	31.50.186	_
Reinforcement ring for BL20-2, 4x	PA	-40°F–230°F	31.50.071	_
Reinforcement ring for BL30-2, 4x	PA	-40°F–230°F	31.50.072	_
Reinforcement ring for BL40-2 & B-BL40-2, 4x	PA	-40°F–230°F	31.50.073	_
Reinforcement ring for BL50-2, 4x	PA	-40°F–230°F	31.50.074	_
Strengthening ring 20-30 (yellow)	CR	-40°F–230°F	01.01.084	_
Strengthening ring 20-30 (blue)	SIL	-94°F–392°F	01.01.084S	_
Strengthening ring 40 (yellow)	CR	-40°F–230°F	01.01.085	_
Strengthening ring 40 (blue)	SIL	-94°F–392°F	01.01.085S	_
Strengthening ring 50 (yellow)	CR	-40°F–230°F	01.01.086	_
Strengthening ring 50 (blue)	SIL	-94°F–392°F	01.01.086S	_
Filter disk for BX25P	Polyester/TPE	-40°F–194°F	01.09.311	_
Filter disk for BX35P	Polyester/TPE	-40°F–194°F	01.06.373	_
Filter disk for BX52P	Polyester/TPE	-40°F–194°F	01.04.726	_
Filter disk for BX75P	Polyester/TPE	-40°F–194°F	01.06.374	_
Filter disk for BX110P	Polyester/TPE	-40°F–194°F	01.08.163	_
Filter disk for B50-2	PE	-40°F–176°F	31.50.243	_
Filter disk for B75-2	PE	-40°F–176°F	31.50.244	_
Filter disk for B110-2	PE	-40°F–176°F	31.50.249	_
Cone valve for F40-2	Al/SS/NBR	-40°F–230°F	31.50.056	04UV
Cone valve for F50-2	Al/SS/NBR	-40°F–230°F	31.50.057	05UV
Cone valve for F75	Al/SS/NBR	-40°F–230°F	32.50.038	07VF
Cone valve for F110/F150	Al/SS/NBR	-40°F–230°F	33.50.034	11UV/15VA
Cone valve for P35. P60	Al/SS/NBR	-40°F–230°F	33.50.033	03UV
Cone valve for P100	Al/SS/NBR	-40°F–230°F	33.50.058	10UV
Thread insert G3/8" male, with O-ring	Brass/SS/NBR	-40°F–230°F	01.06.797	G40W
Thread insert G3/8" male, with O-ring and mesh filter	Brass/SS/NBR	-40°F–230°F	01.07.148	G40M
Clamp ring 75 2x	Al	-40°F–230°F	01.02.943	07NA-07VF
Clamp ring 110 2x	Al	-40°F–230°F	01.02.944	11NA-11VC
Clamp ring 150 2x	Al	-40°F–230°F	01.02.945	15NA-15VA
Connection plate 1/8" NPSF female	Al	-40°F–230°F	31.50.043	07UA
Connection plate 3/8" NPSF female	Al	-40°F–230°F	31.50.218U	07UB
Connection plate G3/8" female	PPS	-4°F–176°F	31.50.221	07UC
Connection plate G1/2" female	Al	-40°F–230°F	31.50.211	07UD
Connection plate G1/2" female	PPS	-4°F–176°F	31.50.222	07UE
Connection plate 1/4" NPT female w/ M5 addl. conn.	Al/Brass	-40°F–230°F	31.50.0431/4	07UH
Connection plate 1/8" NPSF female w/ M5 addl. conn	Al/Brass	-40°F–230°F	31.50.043AL10/32	07UI
Connection plate 3/8" NPSF female	PPS	-4°F–176°F	31.50.221U	07UU
Connection plate 1/8" NPSF female	Al	-40°F–230°F	01.03.009	07NA
Connection plate G3/8" female	Al	-40°F–230°F	01.03.011	07ND
Connection plate 3/8" NPSF female	Al	-40°F–230°F	01.03.012	07NE
Connection plate G1/2" female	Al	-40°F–230°F	01.03.013	07NF
Connection plate G1/2" female w/ G1/8" addl. conn.	Al	-40°F–230°F	31.50.044	11UA
Connection plate G3/8" female	Al	-40°F–230°F	01.03.016	11NA
Connection plate G3/8" female w/ G1/8" addl. conn	Al	-40°F–230°F	01.03.014	11NB
Connection plate G1/2" female w/ G1/8" addl. conn	Al	-40°F–230°F	01.03.018	11NC
Connection plate G1/2" female w/ G1/8" addl. conn	Al	-40°F–230°F	31.50.045	15UA
Connection plate G1/2" female w/ G1/8" addl. conn	Al	-40°F–230°F	01.03.020	15NA/15VA
Connection plate G3/4" female w/ G1/8" addl. conn	Al	-40°F–230°F	01.03.022	15NB
Fiter screen 25mm	SS	-40°F–230°F	31.50.215	07UA-07UU/07NA-07NF
Fiter screen 11x11mm (addl. conn.)	SS	-40°F–230°F	31.50.163	07UH-07UI
Fiter screen 30mm	SS	-40°F–230°F	31.50.167	11UA/11NA-11NC/15UA/15NA-15NB
Fiter screen 15x15mm (addl. conn.)	SS	-40°F–230°F	31.50.164	11UA
Fiter screen 21x21mm (addl. conn.)	SS	-40°F–230°F	31.50.165	15UA-15UV
Plug M5 with washer	Brass/PA	-40°F–230°F	31.07.033	07UH-07UI
Plug G1/8" with o-ring	Brass/NBR	-40°F–230°F	31.07.034	11UA-11VC/11NA-11NC/15UA-15VA
Screw 2x	SS	-40°F–230°F	01.02.995	Clamp ring fittings
Screw 4x	SS	-40°F–230°F	31.13.752	Al conn plate fittings
Screw 4x	SS	-40°F–230°F	31.13.901	PPS conn plate fittings


3
2

Vacuum grippers

PIAB VGS™ – A product design where high quality DURAFLEX® suction cups are integrated with vacuum cartridges based on the patented COAX® technology. The “vacuum gripper” makes selection, sizing and installation of a vacuum system easier. With a VGS™ you will enjoy the benefits of a more cost-efficient and reliable vacuum system.

EFFICIENT MATERIAL HANDLING

INCREASE YOUR PRODUCTIVITY AND REDUCE YOUR COSTS WITH VGS™

- **Faster response time**
- **Lower energy cost**
- **Higher operation reliability**
- **Easy selection and sizing** — Knowledge about your specific vacuum flow, level or volume requirements are not required. Only feed pressure and the material being handled determine the optimal VGS™ for your application.
- **Improved grip, lifting capacity and wear resistance with DURAFLEX® cups** — Provides up to 50% higher frictional grip as compared to conventional cups.

SIMPLE INSTALLATION AND MAINTENANCE

The VGS™ mounts easily to most extrusion and profile systems.

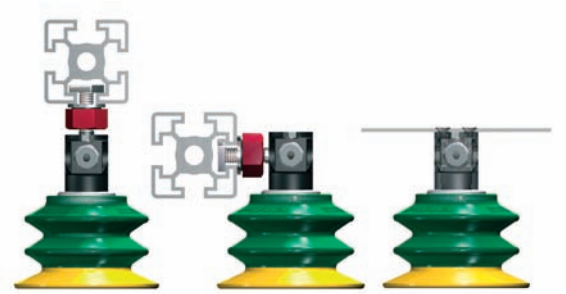

Mounting kit for profiles

FLEXIBLE POSITIONING

Once installed, the position of the VGS™ can be adjusted to accommodate changing handling conditions.

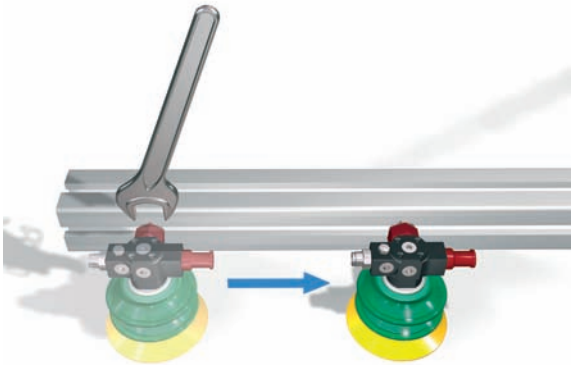

EXCEPTIONAL HANDLING STABILITY WITH STABILIZER

Use a VGS™3010 with Stabilizer and eliminate the need for multiple suction cups.

The Stabilizer reduces the need for using many suction cups for safe and stable lifting. It is used with suction cup models BX52P and BX75P. Adjustable supports create exceptional stability when handling items such as corrugated boxes, boards and sheets. The Stabilizer is also an excellent aid for handling objects that are hard to grip.

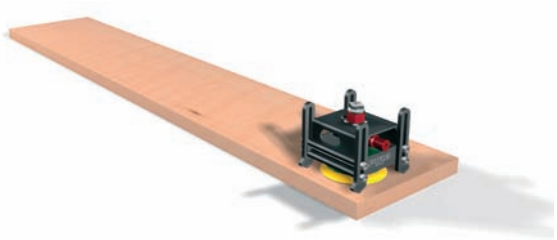

Exceptional handling stability with stabilizer

VGS™ APPLICATION EXAMPLES

VGS™ with DURAFLEX® suction cups can handle these materials more effectively than conventional cup and pump solutions.

- Corrugated boxes/containers
- Sheet metal
- Glass
- Wood
- Plastic
- Small parts assembly and more...

Using a VGS™3010 with Stabilizer increases the ability to handle sheets with sharp convex and concave surfaces and reduces the quantity of cups needed.

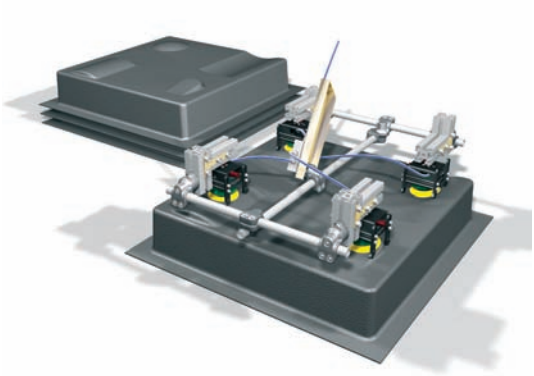

VGS™ used for palletizing or depalletizing means a flexible, quick and easy changeover. The VGS™ eliminates the need to use multiple end effectors to handle material that changes size or position.

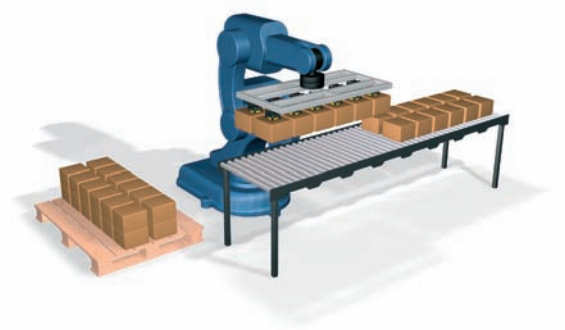

Handling configuration 1.

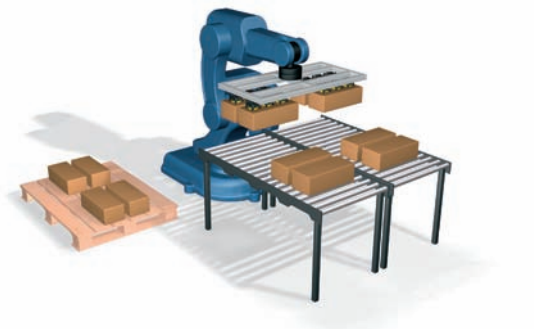

Handling configuration 2.

AID TO SELECTION

Build a VGS™ according to your needs.

A – CHOOSE SUCTION CUP DESIGN

Choose from a large variety of DURAFLEX® suction cups, available as flat, bellows, multi-bellows and oval cups.

The DURAFLEX® suction cups are manufactured in a specially developed polyurethane. DURAFLEX® combines the soft elasticity of rubber with the exceptional wear resistance of polyurethane while also being non-marking.

B – CHOOSE THE HARDNESS OF THE SUCTION CUP

Many of the cups are available in a version where the body and the sealing surface are of different hardness (dual durometer). This gives the cup both strength and stability as well as flexibility to adapt itself to uneven surfaces. Lower or dual durometer cups should be used for maximum friction/grip and sealing capability (reduced micro-leakage). Higher durometer cups should be used for maximum wear resistance and for longer cup life.

Molded fitting with removable thread insert. Reduce cost by recycling the insert when changing the suction cup. The suction cup can be locked into place from under the cup with a socket-head wrench.

SUCTION CUP MATERIAL KEY

Yellow	30° Shore A
Red	40° Shore A
Blue	50° Shore A
Green	60° Shore A
Black	70° Shore A

SUCTION CUP OPTION FOR VGS™3010 – CHOOSE A CUP WITH STABILIZER

For increased stability and for the flexibility to handle objects that are hard to grip with vacuum, a stabilizer should be used. The supports are height-adjustable for different types of objects.

- Stabilizer 50 fits suction cup BX52P
- Stabilizer 75 fits suction cup BX75P

Polyurethane rubber pads now standard on all stabilizers, part no. 01.07.985 (x4).

C – CHOOSE COAX® CARTRIDGE

- Choose a 2-stage ejector for minimum mounting dimensions, when handling non-porous material such as sheet metal or when using smaller suction cups.
- Choose a 3-stage ejector for faster response, handling porous material such as corrugated or when using large suction cups.
- Choose a blind plug (without COAX® cartridge), if the unit is to work as a "slave", i.e. vacuum is generated by another VGS™ unit in the system.

A non-return valve in the COAX® cartridge should be used to maintain vacuum in a sealed system for a short period of time to increase safety during interruptions of air supply.

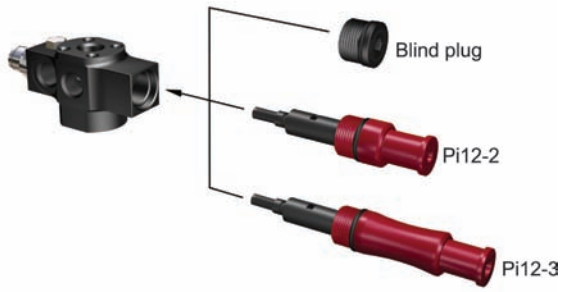

Example showing VGS™3010

D – CHOOSE MOUNTING AND MOUNTING ORIENTATION

There are different mounting interfaces available which makes the VGS™ very flexible. There is also a possibility to choose mounting orientation.

VGS™2010

Flush mount, top

M6 19 mm top, profile kit

VGS™3010

Flush mount, top

M8 27 mm/M6 22 mm, top, profile kit

M8 16 mm, top

Ball joint, left

Lock pin, left

Level Compensator, LC30

VGS™5010

Flush mount, top

Flush mount, angle bracket

M12 20 mm, top

M12 20 mm, top, angle bracket

MOUNTING ORIENTATION

For several of the different mounting options there is a possibility to choose mounting orientation.

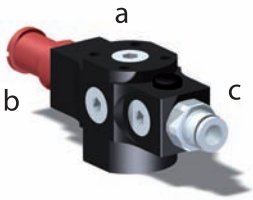

a) Top side, b) left side, c) right side

VGS™3010 SYSTEM SOLUTION EXAMPLES

A profile-mounted VGS™3010 can be made non-rotating by running a guide pin in the profile slot.
Use the M5 threaded connection on the VGS™3010 housing.
(Guide pin not supplied by PIAB.)

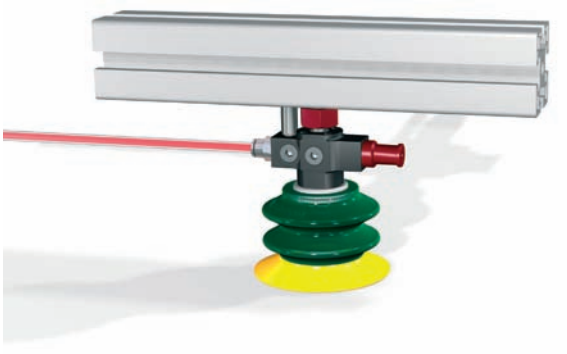

Non-rotating guide pin

When the need for vacuum flow is small, for example in air-tight systems with small cups, a VGS™3010 with a COAX® cartridge could provide vacuum to multiple "slave units".

Suction cups No. 1, 3 and 4 are "slave units" (no COAX® cartridge).

In order to have efficient cleaning of suction cup filters and blow-off for quickly releasing parts, compressed air should be connected to one of the extra vacuum ports on the VGS™3010.

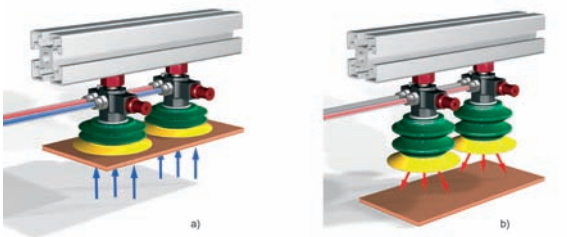

Quick release of parts – a) Vacuum, b) Blow-off

For increased safety and control of the vacuum system, a PIAB mini vacuum switch can easily be connected to a VGS™3010. The switches are available as pre-set or with adjustable signal level. Pre-set is recommended to avoid unwanted signal level changes (adjustment-proof). You can find part no. and technical data for the switches in the Accessories section of this catalog.

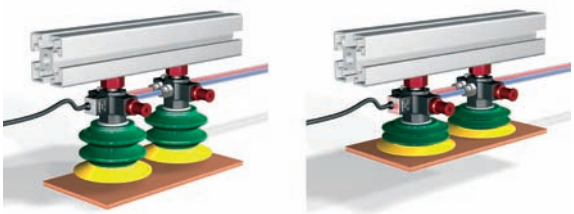

Vacuum sensing

EXPLANATION OF VGS™2010 ORDERING NUMBER

1. COAX® cartridge	VGS code
No COAX® cartridge (slave unit)	AA
COAX® cartridge MICRO Bi03-2	AB
COAX® cartridge Micro Si02-2	AF

2. Mounting/orientation	VGS code
4x M3 top, flush mount	00
M6 19 mm top, profile kit	01
M6 19 mm right, profile kit	02
M6 19 mm left, profile kit	03

3. Suction cup with fitting	VGS code
No suction cup	BA
BX25P 30°/60° Shore A	DA
BX25P 60° Shore A	DB
FC20P 50° Shore A	DC
FC25P 50° Shore A	DD
OB20x60P 60° Shore A	DE
OF10x30P 50° Shore A	DF
OF15x45P 50° Shore A	DG

Example	Ordering number			
		From table 1.	From table 2.	From table 3.
VGS™2010, Bi03-2, M6 19 mm top, profile kit, FC25P 50° Shore A	VGS2010	AB	01	DD

EXPLANATION OF VGS™3010 ORDERING NUMBER

1. COAX® cartridge	VGS code
No COAX® cartridge (slave unit with blind plug M14x1)	AA
COAX® cartridge Pi12-2	AB
COAX® cartridge Pi12-3	AC
COAX® cartridge Pi12-2, non-return valve	AD
COAX® cartridge Pi12-3, non-return valve	AE

2. Mounting / orientation	VGS code
4x M4 & 1x plug G1/8" top, flush mount	00
M8 16 mm top	01
M8 16 mm right	02
M8 16 mm left	03
M8 27 mm top, profile kit	04
M8 27 mm right, profile kit	05
M8 27 mm left, profile kit	06
M6 22 mm screw top, profile kit	07
M6 22 mm screw right, profile kit	08
M6 22 mm screw left, profile kit	09
Ball joint VGS™3010 right	11
Ball joint VGS™3010 left	12
Lock-pin VGS™3010, right	13
Lock-pin VGS™3010, left	14
Level Compensator LC30, 5x plug G1/8" kit	15

3. Suction cup with fitting /suction cup with fitting and stabilizer	VGS code
No suction cup	BA
B75P 30/60° Shore A	BB
B75P 60° Shore A	BC
BF80P 30°/50° Shore A	BD
BF80P 60° Shore A	BE
BX35P 30/60° Shore A	BF
BX35P 60° Shore A	BG
BX52P 30/60° Shore A	BH
BX52P 60° Shore A	BI
BX75P 30/60° Shore A	BJ
BX75P 60° Shore A	BK
F75P 30/60° Shore A	BL
F75P 60° Shore A	BM
F110P 30/60° Shore A	BN
F110P 60° Shore A	BO
FC50P 40° Shore A	BP
FC50P 60° Shore A	BQ
FC75P 40° Shore A	BR
FC75P 60° Shore A	BS
FC100P 40° Shore A	BT
FC100P 60° Shore A	BU
BX52P 30°/60° Shore A with Stabilizer 50	BW
BX52P 60° Shore A with Stabilizer 50	BX
BX75P 30°/60° Shore A with Stabilizer 75	BY
BX75P 60° Shore A with Stabilizer 75	BZ
OB35X90P 30/60° Shore A	CA
OB35X90P 60° Shore A	CB
OB50X140P 30/60° Shore A	CC
OB50X140P 60° Shore A	CD
OB65X170P 30/60° Shore A	CE
OB65X170P 60° Shore A	CF
OF25X70P 40° Shore A	CG
OF25X70P 60° Shore A	CH
OF40X110P 40° Shore A	CI
OF40X110P 60° Shore A	CJ
OF55X150P 40° Shore A	CK
OF55X150P 60° Shore A	CL
OF70X175P 40° Shore A	CM
OF70X175P 60° Shore A	CN
BF110P 30/60° Shore A	CO
BF110P 60° Shore A	CP
BX110P 30/60° Shore A	CQ
BX110P 60° Shore A	CR

BW, BX, BY and BZ are not possible to combine with mounting/orientation 00, 02, 03, 05, 06, 08, 09, 11, 12, 13, 14. or 15.

Example	Ordering number			
		From table 1.	From table 2.	From table 3.
VGS™3010, Pi12-3, M8 27 mm top, profile kit, B75P 30°/60° Shore A	VGS3010	AC	04	BB

EXPLANATION OF VGS™5010 ORDERING NUMBER

1. COAX® cartridge	VGS code
No COAX® cartridge (slave unit)	AA
COAX® cartridge MIDI Pi48-2	AB
COAX® cartridge MIDI Pi48-3	AC
COAX® cartridge MIDI Pi48-2, non-return valve	AD
COAX® cartridge MIDI Pi48-3, non-return valve	AE
COAX® cartridge MIDI Si32-2	AF
COAX® cartridge MIDI Si32-3	AG
COAX® cartridge MIDI Si32-2, non-return valve	AH
COAX® cartridge MIDI Si32-3, non-return valve	AI

2. Mounting/orientation	VGS code
4x M6 top, flush mount	00
4x M6 top, angle bracket	01
M12 20 mm top	02
M12 20 mm right	03
M12 20 mm left	04
M12 20 mm top, angle bracket	05
M12 20 mm right, angle bracket	06
M12 20 mm left, angle bracket	07

3. Suction cup	VGS code
No suction cup	BA
BF110P 30°/60° Shore A	CO
BF110P 60° Shore A	CP
BL50-3P 30°/70° Shore A	CX
BX75P 30°/60° Shore A	CY
BX75P 60° Shore A	CZ
BX110P 30°/60° Shore A	CQ
BX110P 60° Shore A	CR
F110P 30°/60° Shore A	CS
F110P 60° Shore A	CT
OB65x170P 30°/60° Shore A	CU
OB65x170P 60° Shore A	CV

Example	Ordering number			
		From table 1.	From table 2.	From table 3.
VGS™5010, Pi48-2, M12 20 mm top, BF110P 30°/60° Shore A	VGS5010	AB	02	CO

VGS™ PERFORMANCE CHARTS

VACUUM FLOW VGS™2010

COAX® Cartridge Type	Feed pressure	Air consumption	Vacuum flow (scfm) at different vacuum levels								Max vacuum
	psi	scfm	0	3	6	9	12	15	18	21	-inHg
Bi03-2	16	0.21	0.36	0.21	0.08	0.06	0.03	—	—	—	15.0
	26	0.30	0.49	0.32	0.13	0.08	0.07	0.05	0.03	0.01	24.9
	32	0.36	0.57	0.40	0.19	0.08	0.05	0.04	0.02	0.01	24.6
Si02-2	58	0.19	0.53	0.32	0.17	0.15	0.11	0.06	—	—	18.0
	72.5	0.21	0.57	0.40	0.19	0.17	0.15	0.11	0.04	—	21.0
	87	0.25	0.59	0.44	0.25	0.17	0.15	0.13	0.08	0.04	22.2

EVACUATION TIME VGS™2010

COAX® Cartridge Type	Feed pressure	Air consumption	Evacuation time (s/cf) to reach different vacuum levels (-inHg)								
	psi	scfm	3	6	9	12	15	18	21	24	-inHg
Bi03-2	16	0.21	19.8	82.2	167	312	793	—	—	—	15.0
	26	0.30	14.2	39.7	110	181	283	453	793	1445	24.9
	32	0.36	11.3	31.2	93.5	181	312	510	907	1756	24.6
Si02-2	58	0.19	14.2	38.8	76.5	125	195	—	—	—	18.0
	72.5	0.21	12.2	32.6	66.0	105	150	232	—	—	21.0
	87	0.25	11.6	28.6	56.9	93.5	139	195	289	—	22.2

VACUUM FLOW VGS™3010

COAX® Cartridge Type	Feed pressure	Air consumption	Vacuum flow (scfm) at different vacuum levels										Max vacuum
	psi	scfm	0	3	6	9	12	15	18	21	24	27	-inHg
Pi12-2	25	0.61	1.21	0.85	0.47	0.32	0.15	—	—	—	—	—	14.7
	45	0.93	1.44	1.27	0.93	0.57	0.40	0.30	0.21	0.13	0.06	—	27.0
	58	1.12	1.40	1.27	1.10	0.83	0.51	0.25	0.21	0.13	0.04	—	25.2
													—
Pi12-3	25	0.61	1.91	0.85	0.47	0.32	0.15	—	—	—	—	—	14.7
	45	0.93	2.97	1.27	0.93	0.57	0.40	0.30	0.21	0.13	0.06	—	27.0
	58	1.12	2.97	1.48	1.10	0.83	0.51	0.25	0.21	0.13	0.04	—	25.2

EVACUATION TIME VGS™3010

COAX® Cartridge Type	Feed pressure	Air consumption	Evacuation time (s/cf) to reach different vacuum levels (-inHg)									Max vacuum
	psi	scfm	3	6	9	12	15	18	21	24	27	-inHg
Pi12-2	25	0.61	7.93	15.9	32.0	60.3	—	—	—	—	—	14.7
	45	0.93	4.82	9.07	16.4	31.2	51.0	76.5	113	181	—	27.0
	58	1.12	5.10	9.35	15.3	24.1	42.5	70.8	108	201	—	25.2
Pi12-3	25	0.61	4.25	13.0	28.3	56.7	—	—	—	—	—	14.7
	45	0.93	2.27	6.52	13.9	28.3	48.2	73.7	110	178	—	27.0
	58	1.12	2.55	6.80	12.7	21.5	39.7	68.0	105	198	—	25.2

VACUUM FLOW VGS™5010

COAX® Cartridge Type	Feed pressure	Air consumption	Vacuum flow (scfm) at different vacuum levels									Max vacuum
	psi	scfm	0	3	6	9	12	15	18	21	24	-inHg
Pi48-2	25	2.90	5.51	3.60	2.54	1.48	0.85	0.25	—	—	—	16.5
	32	3.43	5.72	4.24	3.18	1.91	1.17	0.95	0.55	0.15	—	21.9
	44	4.24	5.93	5.30	3.81	2.33	1.17	1.06	0.74	0.53	0.21	27.0
	58	5.38	5.93	5.30	4.45	3.18	2.33	1.40	0.76	0.55	0.17	25.8
Pi48-3	25	2.90	8.48	3.60	2.54	1.48	0.85	0.25	—	—	—	16.5
	32	3.43	10.6	4.24	3.18	1.91	1.17	0.95	0.55	0.15	—	21.9
	44	4.24	11.9	5.30	3.81	2.33	1.38	1.06	0.74	0.53	0.21	27.0
	58	5.38	12.1	5.30	4.45	3.18	2.33	1.40	0.76	0.55	0.17	25.8

COAX® Cartridge Type	Feed pressure	Air consumption	Vacuum flow (scfm) at different vacuum levels									Max vacuum
	psi	scfm	0	3	6	9	12	15	18	21	24	-inHg
Si32-2	58	2.65	6.57	5.51	4.03	2.54	1.70	0.85	0.21	—	—	18.0
	72.5	3.18	6.78	6.14	4.66	2.97	1.80	1.31	0.74	0.38	—	21.0
	87	3.71	6.99	6.36	5.51	3.60	1.91	1.27	1.06	0.74	—	22.2
Si32-3	58	2.65	10.6	6.14	4.03	2.54	1.70	0.85	0.21	—	—	18.0
	72.5	3.18	12.1	6.99	4.66	2.97	1.80	1.31	0.74	0.38	—	21.0
	87	3.71	12.7	7.42	5.51	3.60	1.91	1.27	1.06	0.74	—	22.2

EVACUATION TIME VGS™5010

COAX® Cartridge Type	Feed pressure	Air consumption	Evacuation time (s/cf) to reach different vacuum levels (-inHg)									Max vacuum
	psi	scfm	3	6	9	12	15	18	21	24	27	-inHg
Pi48-2	25	2.90	1.13	2.83	5.67	11.3	—	—	—	—	—	16.5
	32	3.43	0.99	2.55	5.10	9.07	14.4	22.7	—	—	—	21.9
	44	4.24	0.85	1.98	3.68	7.37	13.0	19.8	28.3	45.3	113	27.0
	58	5.38	0.85	1.80	3.40	5.38	8.50	17.0	25.5	48.2	127	25.8
Pi48-3	25	2.90	0.85	2.83	5.67	11.3	28.3	—	—	—	—	16.5
	32	3.43	0.71	2.27	4.82	8.50	14.2	22.7	48.2	—	—	21.9
	44	4.24	0.57	1.70	3.40	7.08	12.7	19.8	28.3	45.3	113	27.0
	58	5.38	0.57	1.56	3.12	5.10	8.22	16.7	25.5	48.2	127	25.8
Si32-2	58	2.65	0.04	0.08	0.14	0.24	0.42	1.00	—	—	—	18.0
	72.5	3.18	0.03	0.07	0.11	0.21	0.35	0.60	1.00	—	—	21.0
	87	3.71	0.03	0.07	0.10	0.18	0.33	0.53	0.80	—	—	22.2
Si32-3	58	2.65	0.85	1.98	3.97	6.80	11.9	28.3	—	—	—	18.0
	72.5	3.18	0.57	1.70	3.12	5.95	9.92	17.0	28.3	—	—	21.0
	87	3.71	0.57	1.42	2.83	5.10	9.35	15.0	22.7	—	—	22.2

VGS™2010 BX25P

- Patented COAX® technology.
- Suitable for level adjustment and for uneven and porous materials such as cardboard, etc.
- In the two-colored version the bellows and the sealing lip are of different hardness, which makes the suction cup strong and, at the same time, soft and flexible with good sealing capability.
- A filter disk inside the cup keeps dust out of the system.
- Available with a two-stage COAX® cartridge MICRO. Choose an Si cartridge for extra vacuum flow or a Bi cartridge for high performance at extremely low feed pressure.
- Easy installation and flexible positioning with several mounting options.

TECHNICAL DATA

Description	Unit	Value
Feed pressure, optimum	psi	26 (Bi03-2), 87 (Si03-2)
Feed pressure, max.	psi	101.5
Noise level	dBA	55–61
Temperature range	°F	50-122
Weight	oz	0.89-1.27
Material		Al, SS, NBR, PA, PU

RECOMMENDED LOAD WITH BUILT-IN SAFETY FACTOR OF 2 AND RESPONSE TIME, 30°/60° SHORE

COAX® cartridge	Feed pressure psi	Air consumption and compressor power, continuous operation	Material to be handled (see table below)	Recommended perpendicular load with safety factor 2 lbf	Recommended parallel (shear) load with safety factor 2 lbf	Response time to 15 -inHg with Bi03-2 s
Si	87	0.25 scfm, 40W [0.05 hp]	Plywood	1.80	1.35*	Response time varies based on quality and porosity of handled material
Si	87	0.25 scfm, 40W [0.05 hp]	Corrugated	1.57	1.12*	
Bi	26	0.30 scfm, 46W [0.06 hp]	Dry steel	2.02	1.35*	0.028
Bi	26	0.30 scfm, 46W [0.06 hp]	Oily steel	1.80	0.45*	0.028

**The suction cup is not intended for handling shear lifts. The values are given as a dimensioning guide to be used when, e.g., the acceleration/ retardation causes shear forces.*

RECOMMENDED LOAD WITH BUILT-IN SAFETY FACTOR OF 2 AND RESPONSE TIME, 60° SHORE

COAX® cartridge	Feed pressure psi	Air consumption and compressor power, continuous operation	Material to be handled (see table below)	Recommended perpendicular load with safety factor 2 lbf	Recommended parallel (shear) load with safety factor 2 lbf	Response time to 15 -inHg with Bi03-2 s
Si	87	0.25 scfm, 40W [0.05 hp]	Plywood	1.80	1.35*	Response time varies based on quality and porosity of handled material
Si	87	0.25 scfm, 40W [0.05 hp]	Corrugated	1.80	0.90*	
Bi	26	0.30 scfm, 46W [0.06 hp]	Dry steel	2.02	1.57*	0.028
Bi	26	0.30 scfm, 46W [0.06 hp]	Oily steel	1.80	0.67*	0.028

**The suction cup is not intended for handling shear lifts. The values are given as a dimensioning guide to be used when, e.g., the acceleration/ retardation causes shear forces.*

Remark: The compressor power is calculated according to: 155 W consumed electric power per produced scfm compressed air, valid for a normally sized 7 [100 psi] bar compressor.

Material definition: Corrugated cardboard = B Flute 3 mm, 80 Gurley seconds.

ORDERING INFORMATION

1. COAX® cartridge		VGS Code
	No COAX® cartridge (slave unit)	AA
a	COAX® cartridge MICRO Bi03-2	AB
b	COAX® cartridge MICRO Si02-2	AF

2. Mounting / orientation		VGS code
	4x M3 top, flush mount	00
c	M6 19 mm top, profile kit	01
d	M6 19 mm right, profile kit	02
e	M6 19 mm left, profile kit	03

3. Suction cup with fitting	VGS code
No suction cup	BA
BX25P 30°/60° Shore A	DA
BX25P 60° Shore A	DB

Example	Ordering number
VGS™2010 BX25P – Bi03-2, M6 19 mm top, profile kit, BX25P 30°/60° Shore A	VGS2010 AB 01 DA

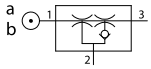

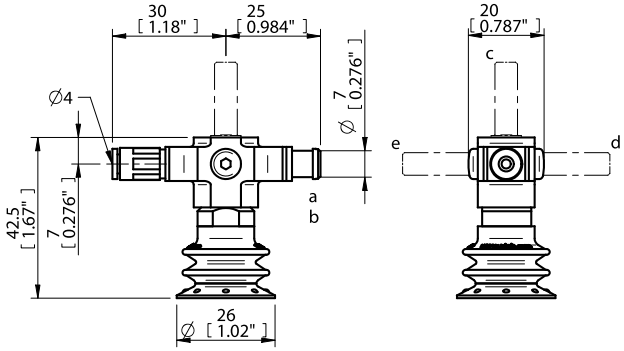

VGS™2010 FC20P

- Patented COAX® technology
- Suitable for lifting small objects and narrow parts as well as slightly domed surfaces.
- Thanks to good friction of the rubber material the cups can withstand high shear forces at rapid accelerations.
- The suction cups have cleats that prevent thin objects from being disfigured.
- Available with a two-stage COAX® cartridge MICRO. Choose an Si cartridge for extra vacuum flow or a Bi cartridge for high performance at extremely low feed pressure.
- Easy installation and flexible positioning with several mounting options.

TECHNICAL DATA

Description	Unit	Value
Feed pressure, optimum	psi	26 (Bi03-2), 87 (Si03-2)
Feed pressure, max.	psi	101.5
Noise level	dBA	55–61
Temperature range	°F	50-122
Weight	oz	0.81-1.20
Material		Al, SS, NBR, PA, PU

RECOMMENDED LOAD WITH BUILT-IN SAFETY FACTOR OF 2 AND RESPONSE TIME, 50° SHORE

COAX® cartridge	Feed pressure psi	Air consumption and compressor power, continuous operation	Material to be handled (see table below)	Recommended perpendicular load with safety factor 2 lbf	Recommended parallel (shear) load with safety factor 2 lbf	Response time to 15 -inHg with Bi03-2 s
Si	87	0.25 scfm, 40w [0.05 hp]	Plywood	1.57	1.35	Response time varies based on quality and porosity of handled material
Si	87	0.25 scfm, 40w [0.05 hp]	Corrugated	1.57	1.12	
Bi	26	0.30 scfm, 46w [0.06 hp]	Dry steel	1.80	1.35	0.009
Bi	26	0.30 scfm, 46w [0.06 hp]	Oily steel	1.57	0.67	0.009

Remark: The compressor power is calculated according to: 155 W consumed electric power per produced scfm compressed air, valid for a normally sized 7 [100 psi] bar compressor.

Material definition: Corrugated cardboard = B Flute 3 mm, 80 Gurley seconds.

ORDERING INFORMATION

1. COAX® cartridge		VGS Code
	No COAX® cartridge (slave unit)	AA
a	COAX® cartridge MICRO Bi03-2	AB
b	COAX® cartridge MICRO Si02-2	AF

2. Mounting / orientation		VGS code
	4x M3 top, flush mount	00
c	M6 19 mm top, profile kit	01
d	M6 19 mm right, profile kit	02
e	M6 19 mm left, profile kit	03

3. Suction cup with fitting	VGS code
No suction cup	BA
FC20P 50° Shore A	DC

Example	Ordering number
VGS™2010 FC20P – Bi03-2, M6 19 mm top, profile kit, FC20P 50° Shore A	VGS2010 AB 01 DC

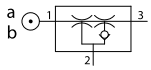

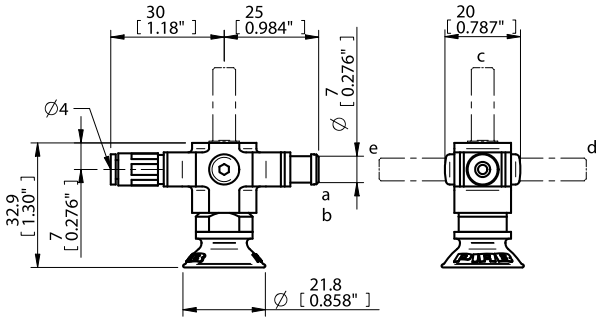

VGS™2010 FC25P

- Patented COAX® technology.
- Suitable for lifting small objects and narrow parts as well as slightly domed surfaces.
- Thanks to good friction of the rubber material the cups can withstand high shear forces at rapid acceleration.
- The suction cups have cleats that prevent thin objects from being disfigured.
- Available with a two-stage COAX® cartridge MICRO. Choose an Si cartridge for extra vacuum flow or a Bi cartridge for high performance at extremly low feed pressure.
- Easy installation and flexible positioning with several mounting options.

TECHNICAL DATA

Description	Unit	Value
Feed pressure, optimum	psi	26 (Bi03-2), 87 (Si03-2)
Feed pressure, max.	psi	101.5
Noise level	dBA	55–61
Temperature range	°F	50-122
Weight	oz	0.85-1.23
Material		Al, SS, NBR, PA, PU

RECOMMENDED LOAD WITH BUILT-IN SAFETY FACTOR OF 2 AND RESPONSE TIME, 50° SHORE

COAX® cartridge	Feed pressure psi	Air consumption and compressor power, continuous operation	Material to be handled (see table below)	Recommended perpendicular load with safety factor 2 lbf	Recommended parallel (shear) load with safety factor 2 lbf	Response time to 15 -inHg with Bi03-2 s
Si	87	0.25 scfm, 40W [0.05 hp]	Plywood	2.47	2.25	Response time varies based on quality and porosity of handled material
Si	87	0.25 scfm, 40W [0.05 hp]	Corrugated	2.25	1.80	
Bi	26	0.30 scfm, 46W [0.06 hp]	Dry steel	2.92	2.02	0.029
Bi	26	0.30 scfm, 46W [0.06 hp]	Oily steel	2.47	1.12	0.029

Remark: The compressor power is calculated according to: 155 W consumed electric power per produced scfm compressed air, valid for a normally sized 7 [100 psi] bar compressor.

Material definition: Corrugated cardboard = B Flute 3 mm, 80 Gurley seconds.

ORDERING INFORMATION

1. COAX® cartridge		VGS Code
	No COAX® cartridge (slave unit)	AA
a	COAX® cartridge MICRO Bi03-2	AB
b	COAX® cartridge MICRO Si02-2	AF

2. Mounting / orientation		VGS code
	4x M3 top, flush mount	00
c	M6 19 mm top, profile kit	01
d	M6 19 mm right, profile kit	02
e	M6 19 mm left, profile kit	03

3. Suction cup with fitting	VGS code
No suction cup	BA
FC25P 50° Shore A	DD

Example	Ordering number
VGS™2010 FC25P – Bi03-2, M6 19 mm top, profile kit, FC25P 50° Shore A	VGS2010 AB 01 DD

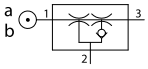

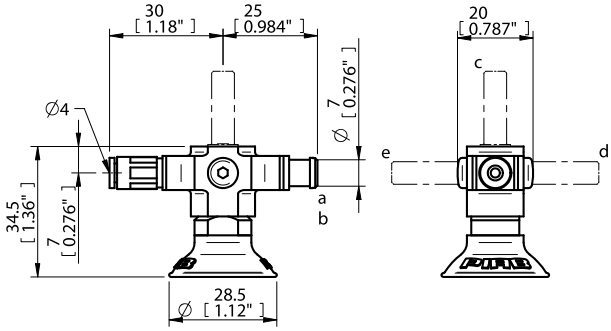

VGS™2010 OB20X60P

- Patented COAX® technology.
- Suitable for handling small, oblong objects and for level adjustment. Can handle objects with height differences and varying shapes.
- Lifting movement to separate small and thin objects.
- Available with a two-stage COAX® cartridge MICRO. Choose an Si cartridge for extra vacuum flow or a Bi cartridge for high performance at extremly low feed pressure.
- Easy installation and flexible positioning with several mounting options.

TECHNICAL DATA

Description	Unit	Value
Feed pressure, optimum	psi	26 (Bi03-2), 87 (Si03-2)
Feed pressure, max.	psi	101.5
Noise level	dBA	55–61
Temperature range	°F	50-122
Weight	oz	0.95-1.34
Material		Al, SS, NBR, PA, PU

RECOMMENDED LOAD WITH BUILT-IN SAFETY FACTOR OF 2 AND RESPONSE TIME, 60° SHORE

COAX® cartridge	Feed pressure psi	Air consumption and compressor power, continuous operation	Material to be handled (see table below)	Recommended perpendicular load with safety factor 2 lbf	Recommended parallel (shear) load with safety factor 2 lbf	Response time to 15 -inHg with Bi03-2 s
Si	87	0.25 scfm, 40W [0.05 hp]	Plywood	4.95	5.85	Response time varies based on quality and porosity of handled material
Si	87	0.25 scfm, 40W [0.05 hp]	Corrugated	2.25	2.92	
Bi	26	0.30 scfm, 46W [0.06 hp]	Dry steel	6.07	5.17	0.228
Bi	26	0.30 scfm, 46W [0.06 hp]	Oily steel	4.05	2.25	0.228

Remark: The compressor power is calculated according to: 155 W consumed electric power per produced scfm compressed air, valid for a normally sized 7 [100 psi] bar compressor.

Material definition: Corrugated cardboard = B Flute 3 mm, 80 Gurley seconds.

ORDERING INFORMATION

1. COAX® cartridge		VGS Code
	No COAX® cartridge (slave unit)	AA
a	COAX® cartridge MICRO Bi03-2	AB
b	COAX® cartridge MICRO Si02-2	AF

2. Mounting / orientation		VGS code
	4x M3 top, flush mount	00
c	M6 19 mm top, profile kit	01
d	M6 19 mm right, profile kit	02
e	M6 19 mm left, profile kit	03

3. Suction cup with fitting	VGS code
No suction cup	BA
OB20x60P 60° Shore A	DE

Exempel	Ordering number
VGS™2010 OB20x60P – Bi03-2, M6 19 mm top, profile kit, OB20x60P 60° Shore A	VGS2010 AB 01 DE

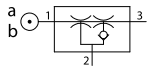

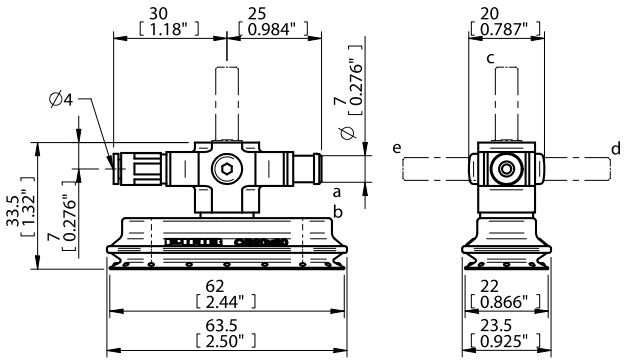

VGS™2010 0F10X30P

- Patented COAX® technology.
- Suitable for small, oblong objects with flat surfaces.
- Fair stability and little inherent movement.
- Thanks to good friction of the rubber material the cups can withstand high shear forces at rapid acceleration.
- The suction cups have cleats that prevent thin objects from being disfigured.
- Available with a two-stage COAX® cartridge MICRO. Choose an Si cartridge for extra vacuum flow or a Bi cartridge for high performance at extremly low feed pressure.
- Easy installation and flexible positioning with several mounting options.

TECHNICAL DATA

Description	Unit	Value
Feed pressure, optimum	psi	26 (Bi03-2), 87 (Si03-2)
Feed pressure, max.	psi	101.5
Noise level	dBA	55–61
Temperature range	°F	50-122
Weight	oz	0.99-1.38
Material		Al, SS, NBR, PA, PU

RECOMMENDED LOAD WITH BUILT-IN SAFETY FACTOR OF 2 AND RESPONSE TIME, 50° SHORE

COAX® cartridge	Feed pressure psi	Air consumption and compressor power, continuous operation	Material to be handled (see table below)	Recommended perpendicular load with safety factor 2 lbf	Recommended parallel (shear) load with safety factor 2 lbf	Response time to 15 -inHg with Bi03-2 s
Si	87	0.25 scfm, 40W [0.05 hp]	Plywood	0.90	1.35	Response time varies based on quality and porosity of handled material
Si	87	0.25 scfm, 40W [0.05 hp]	Corrugated	0.67	1.35	
Bi	26	0.30 scfm, 46W [0.06 hp]	Dry steel	1.57	1.12	0.004
Bi	26	0.30 scfm, 46W [0.06 hp]	Oily steel	1.57	0.45	0.004

Remark: The compressor power is calculated according to: 155 W consumed electric power per produced scfm compressed air, valid for a normally sized 7 [100 psi] bar compressor.

Material definition: Corrugated cardboard = B Flute 3 mm, 80 Gurley seconds.

ORDERING INFORMATION

1. COAX® cartridge		VGS Code
	No COAX® cartridge (slave unit)	AA
a	COAX® cartridge MICRO Bi03-2	AB
b	COAX® cartridge MICRO Si02-2	AF

2. Mounting / orientation		VGS code
	4x M3 top, flush mount	00
c	M6 19 mm top, profile kit	01
d	M6 19 mm right, profile kit	02
e	M6 19 mm left, profile kit	03

3. Suction cup with fitting	VGS code
No suction cup	BA
OF10x30P 50° Shore A	DF

Example	Ordering number
VGS™2010 OF10x30P – Bi03-2, M6 19 mm top, profile kit, OF10x30P 50° Shore A	VGS2010 AB 01 DF

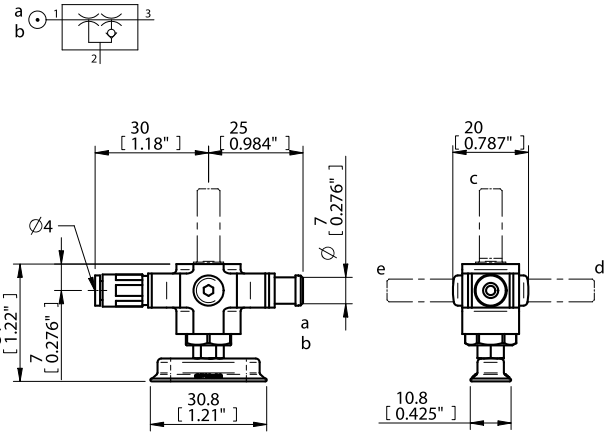

VGS™2010 0F15X45P

- Patented COAX® technology.
- Suitable for small, oblong objects with flat surfaces.
- Fair stability and little inherent movement.
- Thanks to good friction of the rubber material the cups can withstand high shear forces at rapid acceleration.
- The suction cups have cleats that prevent thin objects from being disfigured.
- Available with a two-stage COAX® cartridge MICRO. Choose an Si cartridge for extra vacuum flow or a Bi cartridge for high performance at extremly low feed pressure.
- Easy installation and flexible positioning with several mounting options.

TECHNICAL DATA

Description	Unit	Value
Feed pressure, optimum	psi	26 (Bi03-2), 87 (Si03-2)
Feed pressure, max.	psi	101.5
Noise level	dBA	55–61
Temperature range	°F	50-122
Weight	oz	0.85-1.23
Material		Al, SS, NBR, PA, PU

RECOMMENDED LOAD WITH BUILT-IN SAFETY FACTOR OF 2 AND RESPONSE TIME, 50° SHORE

COAX® cartridge	Feed pressure psi	Air consumption and compressor power, continuous operation	Material to be handled (see table below)	Recommended perpendicular load with safety factor 2 lbf	Recommended parallel (shear) load with safety factor 2 lbf	Response time to 15 -inHg with Bi03-2 s
Si	87	0.25 scfm, 40W [0.05 hp]	Plywood	1.80	2.92	Response time varies based on quality and porosity of handled material
Si	87	0.25 scfm, 40W [0.05 hp]	Corrugated	1.35	2.25	
Bi	26	0.30 scfm, 46W [0.06 hp]	Dry steel	3.15	2.25	0.009
Bi	26	0.30 scfm, 46W [0.06 hp]	Oily steel	2.92	1.12	0.009

Remark: The compressor power is calculated according to: 155 W consumed electric power per produced scfm compressed air, valid for a normally sized 7 [100 psi] bar compressor.

Material definition: Corrugated cardboard = B Flute 3 mm, 80 Gurley seconds.

ORDERING INFORMATION

1. COAX® cartridge		VGS Code
	No COAX® cartridge (slave unit)	AA
a	COAX® cartridge MICRO Bi03-2	AB
b	COAX® cartridge MICRO Si02-2	AF

2. Mounting / orientation		VGS code
	4x M3 top, flush mount	00
c	M6 19 mm top, profile kit	01
d	M6 19 mm right, profile kit	02
e	M6 19 mm left, profile kit	03

3. Suction cup with fitting	VGS code
No suction cup	BA
OF15x45P 50° Shore A	DG

Example	Ordering number
VGS™2010 OF15x45P – Bi03-2, M6 19 mm top, profile kit, OF15x45P 50° Shore A	VGS2010 AB 01 DG

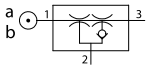

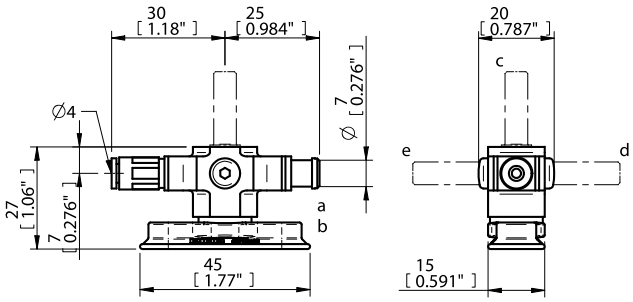

VGS™2010 MOUNTING-KITS

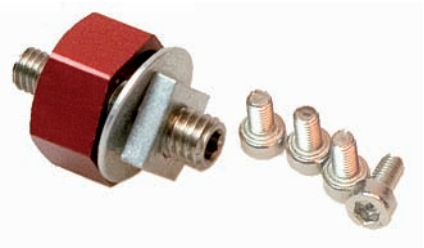

- Fits standard robot end-of-arm tooling interfaces
- Easy attachment to standard extrusion and profile systems
- Flexible positioning
- Quick setup and change-over
- Durable and non-rotating installation

TECHNICAL DATA

Description	Unit	Value	
		01.14.097	01.14.098
Material		SS, PA, NBR	Al, SS, Steel, PA, NBR
Weight	oz	0.14	0.46

	Description	Part No.
A	4x M3 top, flush mount	01.14.097
B	M6 19 mm top, profile kit	01.14.098

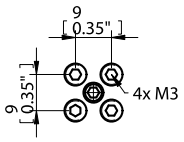

A

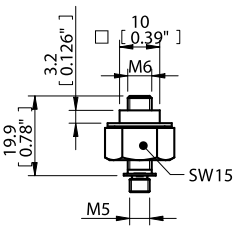

B

BW, BX, BY and BZ are not possible to combine with mounting/orientation 00, 02, 03, 05, 06, 08, 09, 11, 12, 13, 14. or 15.

VGS™3010 B75P

- Patented COAX® technology
- Suitable for level adjustment and for uneven or porous surfaces such as corrugated boxes/ containers.
- Dual hardness allowing strength and stability in conjunction with softness and flexibility.
- DURAFLEX® material features the elasticity of rubber in combination with the wear resistance of polyurethane.
- The DURAFLEX® material is mark-free.
- The suction cups have a molded fitting with removable G3/8” male thread insert.

TECHNICAL DATA

Description	Unit	Value
Feed pressure, optimum	psi	45
Feed pressure, max.	psi	101.5
Noise level	dBA	65–74
Temperature range	°F	50-122
Weight	oz	5.1–5.9
Material		PA, NBR, AL, SS, PU, Brass

RECOMMENDED LOAD WITH BUILT-IN SAFETY FACTOR OF 2 AND RESPONSE TIME, 30°/60° SHORE

Feed pressure psi	Air consumption and compressor power, continuous operation	Material to be handled (see table below)	Recommended perpendicular load with safety factor 2 lbf	Recommended parallel (shear) load with safety factor 2 lbf	Response time to 15 -inHg with Pi12-2 s	Response time to 15 -inHg with Pi12-3 s
45	1 scfm, 155 W [0.21 hp]	Plywood	28.8	14.5	Response time varies based on quality	
45	1 scfm, 155 W [0.21 hp]	Corrugated	12.6	9.67	and porosity of handled material.	
45	1 scfm, 155 W [0.21 hp]	Dry steel	20.7	14.3	0.195	0.187
45	1 scfm, 155 W [0.21 hp]	Oily steel	21.1	5.17	0.195	0.187

RECOMMENDED LOAD WITH BUILT-IN SAFETY FACTOR OF 2 AND RESPONSE TIME, 60° SHORE

Feed pressure psi	Air consumption and compressor power, continuous operation	Material to be handled (see table below)	Recommended perpendicular load with safety factor 2 lbf	Recommended parallel (shear) load with safety factor 2 lbf	Response time to 15 -inHg with Pi12-2 s	Response time to 15 -inHg with Pi12-3 s
45	1 scfm, 155 W [0.21 hp]	Plywood	25.4	25.4	Response time varies based on quality	
45	1 scfm, 155 W [0.21 hp]	Corrugated	14.4	14.4	and porosity of handled material.	
45	1 scfm, 155 W [0.21 hp]	Dry steel	28.8	33.5	0.195	0.187
45	1 scfm, 155 W [0.21 hp]	Oily steel	26.6	8.32	0.195	0.187

Remark: The compressor power is calculated according to: 5.5 W consumed electric power per produced scfm compressed air, valid for a normal sized 7 bar [100 psi] compressor.

NOTE: The response times are not valid for Level Compensator LC30.

Material definition: Corrugated cardboard = B Flute 3 mm, 80 Gurley seconds.

ORDERING INFORMATION

	1. COAX® cartridge	VGS code
	No COAX® cartridge (slave unit with blind plug M14x1)	AA
b	COAX® cartridge Pi12-2	AB
a	COAX® cartridge Pi12-3	AC
c	COAX® cartridge Pi12-2, non-return valve	AD
d	COAX® cartridge Pi12-3, non-return valve	AE

	2. Mounting / orientation	VGS code
	4x M4 & 1x plug G1/8" top, flush mount	00
f	M8 16 mm top	01
g	M8 16 mm right	02
e	M8 16 mm left	03
f	M8 27 mm top, profile kit	04
g	M8 27 mm right, profile kit	05
e	M8 27 mm left, profile kit	06
f	M6 22 mm screw top, profile kit	07
g	M6 22 mm screw right, profile kit	08
e	M6 22 mm screw left, profile kit	09
g	Ball joint VGS™3010 right	11
e	Ball joint VGS™3010 left	12
g	Lock-pin VGS™3010, right	13
e	Lock-pin VGS™3010, left	14
	Level Compensator LC30, 5x plug G1/8" kit	15

For more information about LC30, see separate data sheet.

3. Suction cup with fitting	VGS code
No suction cup	BA
B75P 30°/60° Shore A	BB
B75P 60° Shore A	BC

Example	Ordering number
VGS™3010 B75P – Pi12-3, M8 27 mm top including profile kit, B75P 30/60° Shore A	VGS3010.AC.04.BB

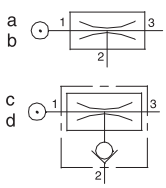

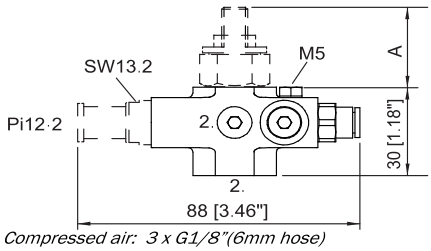

1. Compressed air: 3 x G1/8"(6mm hose)
2. Vacuum: 1 x G3/8" and 3 x G1/8"
3. Exhaust

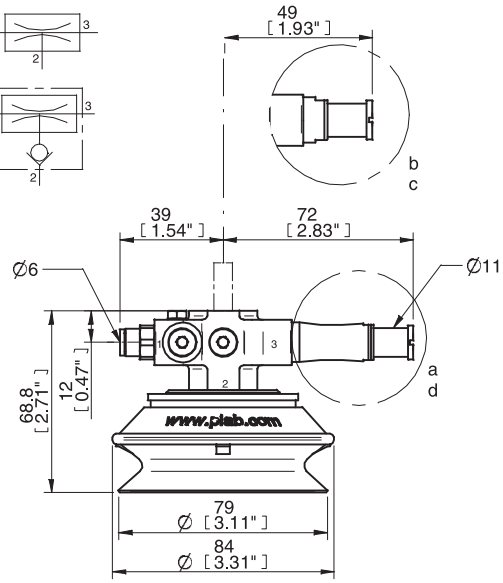

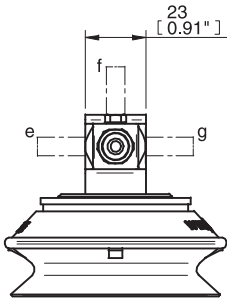

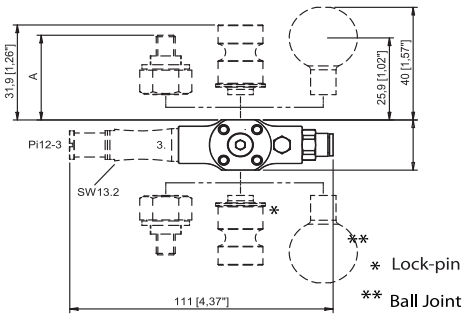

Mounting	A
M8 16	16 [0.63"]
M6 22	22 [0.87"]
M8 27	27 [1.06"]

VGS™3010 BF80P

- Patented COAX® technology
- The dual durometer BF80P is suitable for level adjustment and for uneven and porous surfaces, such as corrugated boxes/containers. The green BF80P is suitable for picking up heavier items, such as sheet metal that has a oily surface.
- Dual hardness allowing strength and stability in conjunction with softness and flexibility.
- DURAFLEX® material features the elasticity of rubber in combination with the wear resistance of polyurethane.
- The DURAFLEX® material is mark-free.
- The suction cup has a molded G3/8” male fitting.

TECHNICAL DATA

Description	Unit	Value
Feed pressure, optimum	psi	45
Feed pressure, max.	psi	101.5
Noise level	dBA	65–74
Temperature range	°F	50-122
Weight	oz	4.41-5.18
Material		PA, NBR, AL, SS, PU, Brass

RECOMMENDED LOAD WITH BUILT-IN SAFETY FACTOR OF 2 AND RESPONSE TIME, 30°/50° SHORE

Feed pressure psi	Air consumption and compressor power, continuous operation	Material to be handled (see table below)	Recommended perpendicular load with safety factor 2 lbf	Recommended parallel (shear) load with safety factor 2 lbf	Response time to 15 -inHg with Pi12-2 s	Response time to 15 -inHg with Pi12-3 s
45	1 scfm, 155 W [0.21 hp]	Plywood	11.5	16.9	Response time varies based on quality	
45	1 scfm, 155 W [0.21 hp]	Corrugated	12.1	8.77	and porosity of handled material.	
45	1 scfm, 155 W [0.21 hp]	Dry steel	11.2	15.5	0.071	0.068
45	1 scfm, 155 W [0.21 hp]	Oily steel	9.89	9.89	0.071	0.068

RECOMMENDED LOAD WITH BUILT-IN SAFETY FACTOR OF 2 AND RESPONSE TIME, 60° SHORE

Feed pressure psi	Air consumption and compressor power, continuous operation	Material to be handled (see table below)	Recommended perpendicular load with safety factor 2 lbf	Recommended parallel (shear) load with safety factor 2 lbf	Response time to 15 -inHg with Pi12-2 s	Response time to 15 -inHg with Pi12-3 s
45	1 scfm, 155 W [0.21 hp]	Plywood	25.0	17.5	Response time varies based on quality	
45	1 scfm, 155 W [0.21 hp]	Corrugated	13.7	12.4	and porosity of handled material.	
45	1 scfm, 155 W [0.21 hp]	Dry steel	29.4	15.3	0.071	0.068
45	1 scfm, 155 W [0.21 hp]	Oily steel	26.1	8.99	0.071	0.068

Remark: The compressor power is calculated according to: 5.5 W consumed electric power per produced scfm compressed air, valid for a normal sized 7 bar [100 psi] compressor.

NOTE: The response times are not valid for Level Compensator LC30.

Material definition: Corrugated cardboard = B Flute 3 mm, 80 Gurley seconds.

ORDERING INFORMATION

	1. COAX® cartridge	VGS code
	No COAX® cartridge (slave unit with blind plug M14x1)	AA
b	COAX® cartridge Pi12-2	AB
a	COAX® cartridge Pi12-3	AC
c	COAX® cartridge Pi12-2, non-return valve	AD
d	COAX® cartridge Pi12-3, non-return valve	AE

	2. Mounting / orientation	VGS code
	4x M4 & 1x plug G1/8" top, flush mount	00
f	M8 16 mm top	01
g	M8 16 mm right	02
e	M8 16 mm left	03
f	M8 27 mm top, profile kit	04
g	M8 27 mm right, profile kit	05
e	M8 27 mm left, profile kit	06
f	M6 22 mm screw top, profile kit	07
g	M6 22 mm screw right, profile kit	08
e	M6 22 mm screw left, profile kit	09
g	Ball joint VGS™3010 right	11
e	Ball joint VGS™3010 left	12
g	Lock-pin VGS™3010, right	13
e	Lock-pin VGS™3010, left	14
	Level Compensator LC30, 5x plug G1/8" kit	15

For more information about LC30, see separate data sheet.

3. Suction cup with fitting	VGS code
No suction cup	BA
BF80P 30°/50° Shore A	BD
BF80P 60° Shore A	BE

Example	Ordering number
VGS™3010 BF80P – Pi12-3, M8 27 mm top including profile kit, BF80P 30/50° Shore A	VGS3010.AC.04.BD

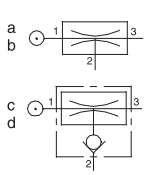

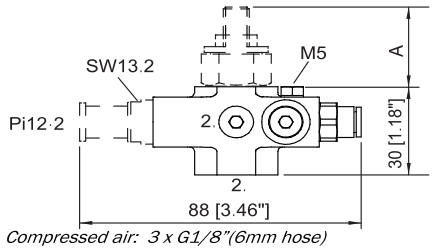

1. Compressed air: 3 x G1/8"(6mm hose)
2. Vacuum: 1 x G3/8" and 3 x G1/8"
3. Exhaust

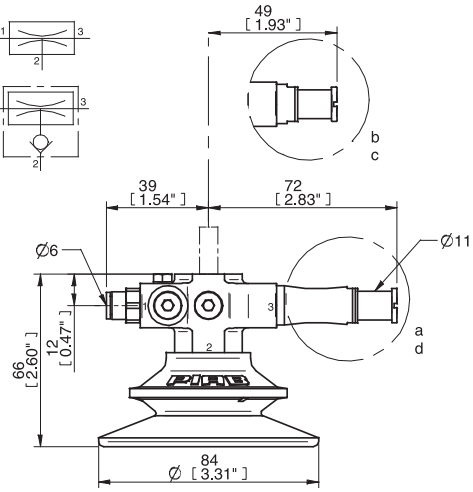

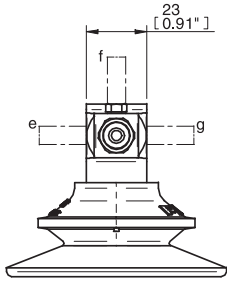

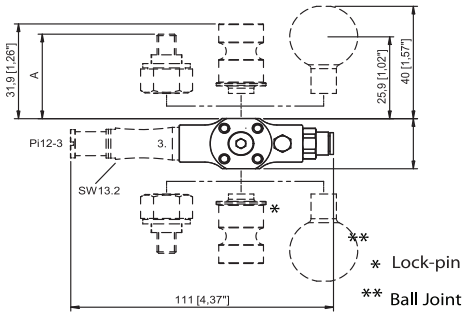

Mounting	A
M8 16	16 [0.63"]
M6 22	22 [0.87"]
M8 27	27 [1.06"]

VGS™3010 BF110P

- Patented COAX® technology
- The dual durometer BF110P is suitable for level adjustment and for uneven and porous surfaces, such as corrugated boxes/containers. The green BF110P is suitable for picking up heavier items, such as sheet metal that has a oily surface.
- Dual hardness allowing strength and stability in conjunction with softness and flexibility.
- DURAFLEX® material features the elasticity of rubber in combination with the wear resistance of polyurethane.
- The DURAFLEX® material is mark-free.
- Molded suction cup fitting with removable thread insert, male G3/8”.

TECHNICAL DATA

Description	Unit	Value
Feed pressure max.	psi	101.5
Noise level	dBA	65–74
Temperature range	°F	50-122
Weight	oz	3.24-10.5
Material		PA, NBR, AL, SS, PU, Brass

RECOMMENDED LOAD WITH BUILT-IN SAFETY FACTOR OF 2 AND RESPONSE TIME, 30°/50° SHORE

Feed pressure psi	Air consumption and compressor power, continuous operation	Material to be handled (see table below)	Recommended perpendicular load with safety factor 2 lbf	Recommended parallel (shear) load with safety factor 2 lbf	Response time to 15 -inHg with Pi12-2 s	Response time to 15 -inHg with Pi12-3 s
45	1 scfm, 155 W [0.21 hp]	Plywood	23.2	20.2	Response time varies based on quality	
45	1 scfm, 155 W [0.21 hp]	Corrugated	17.5	13.9	and porosity of handled material.	
45	1 scfm, 155 W [0.21 hp]	Dry steel	23.8	25.9	0.20	0.19
45	1 scfm, 155 W [0.21 hp]	Oily steel	23.6	11.5	0.20	0.19

RECOMMENDED LOAD WITH BUILT-IN SAFETY FACTOR OF 2 AND RESPONSE TIME, 60° SHORE

Feed pressure psi	Air consumption and compressor power, continuous operation	Material to be handled (see table below)	Recommended perpendicular load with safety factor 2 lbf	Recommended parallel (shear) load with safety factor 2 lbf	Response time to 15 -inHg with Pi12-2 s	Response time to 15 -inHg with Pi12-3 s
45	1 scfm, 155 W [0.21 hp]	Plywood	24.1	19.3	Response time varies based on quality	
45	1 scfm, 155 W [0.21 hp]	Corrugated	13.3	8.99	and porosity of handled material.	
45	1 scfm, 155 W [0.21 hp]	Dry steel	28.8	31.0	0.20	0.19
45	1 scfm, 155 W [0.21 hp]	Oily steel	28.8	12.4	0.20	0.19

Remark: The compressor power is calculated according to: 5.5 W consumed electric power per produced scfm compressed air, valid for a normal sized 7 bar [100 psi] compressor.

NOTE: The response times are not valid for Level Compensator LC30.

Material definition: Corrugated cardboard = B Flute 3 mm, 80 Gurley seconds.

ORDERING INFORMATION

	1. COAX® cartridge	VGS code
	No COAX® cartridge (slave unit with blind plug M14x1)	AA
b	COAX® cartridge Pi12-2	AB
a	COAX® cartridge Pi12-3	AC
c	COAX® cartridge Pi12-2, non-return valve	AD
d	COAX® cartridge Pi12-3, non-return valve	AE

	2. Mounting / orientation	VGS code
	4x M4 & 1x plug G1/8" top, flush mount	00
f	M8 16 mm top	01
g	M8 16 mm right	02
e	M8 16 mm left	03
f	M8 27 mm top, profile kit	04
g	M8 27 mm right, profile kit	05
e	M8 27 mm left, profile kit	06
f	M6 22 mm screw top, profile kit	07
g	M6 22 mm screw right, profile kit	08
e	M6 22 mm screw left, profile kit	09
g	Ball joint VGS™3010 right	11
e	Ball joint VGS™3010 left	12
g	Lock-pin VGS™3010, right	13
e	Lock-pin VGS™3010, left	14
	Level Compensator LC30, 5x plug G1/8" kit	15

For more information about LC30, see separate data sheet.

3. Suction cup with fitting	VGS code
No suction cup	BA
BF110P 30°/60° Shore A	CO
BF110P 60° Shore A	CP

Example	Ordering number
VGS™3010 BF110P – Pi12-3, M8 27 mm top including profile kit, BF110P 30/60° Shore A	VGS3010 AC 04 CO

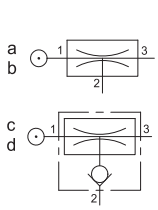

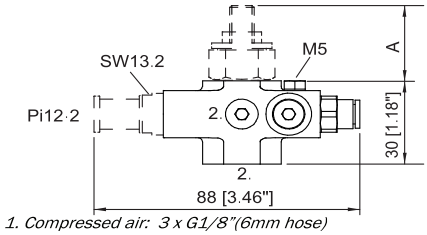

1. Compressed air: 3 x G1/8"(6mm hose)
2. Vacuum: 1 x G3/8" and 3 x G1/8"
3. Exhaust

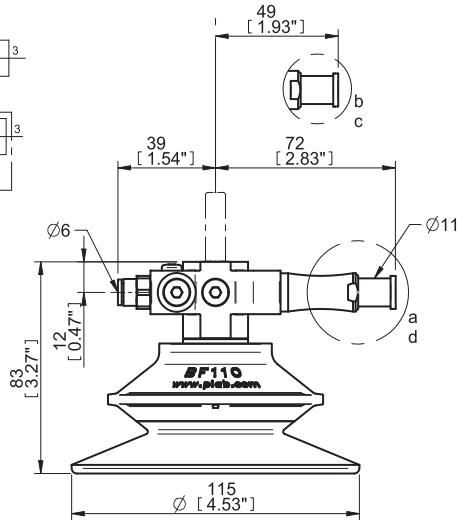

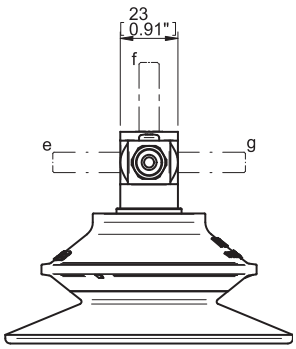

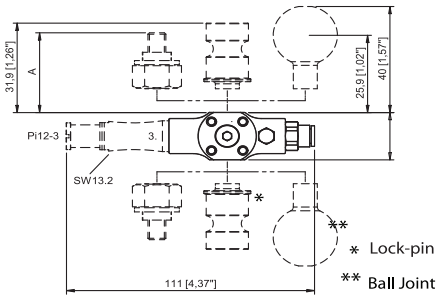

Mounting	A
M8 16	16 [0.63"]
M6 22	22 [0.87"]
M8 27	27 [1.06"]

VGS™3010 BX35P

- Patented COAX® technology
- Suitable for level adjustment and for uneven and porous surfaces, such as corrugated boxes/ containers.
- Dual hardness allowing strength and stability in conjunction with softness and flexibility.
- DURAFLEX® material features the elasticity of rubber in combination with the wear resistance of polyurethane.
- The DURAFLEX® material is mark-free.
- Separate G3/8” male suction cup fitting.
- A filter support ring in the cup keeps dust out of the system. The filter’s materials are polyester (PES41/14) and thermo-plastic-urethane (TPE).

TECHNICAL DATA

Description	Unit	Value
Feed pressure, optimum	psi	45
Feed pressure, max.	psi	101.5
Noise level	dBA	65–74
Temperature range	°F	50-122
Weight	oz	3.10-3.91
Material		PA, NBR, AL, SS, PU, Brass

RECOMMENDED LOAD WITH BUILT-IN SAFETY FACTOR OF 2 AND RESPONSE TIME, 30°/60° SHORE

Feed pressure psi	Air consumption and compressor power, continuous operation	Material to be handled (see table below)	Recommended perpendicular load with safety factor 2 lbf	Recommended parallel (shear) load with safety factor 2 lbf	Response time to 15 -inHg with Pi12-2 s	Response time to 15 -inHg with Pi12-3 a
45	1 scfm, 155 W [0.21 hp]	Plywood	3.60	3.82*	Response time varies based on quality	
45	1 scfm, 155 W [0.21 hp]	Corrugated	3.60	2.92*	and porosity of handled material.	
45	1 scfm, 155 W [0.21 hp]	Dry steel	3.60	3.82*	0.016	0.015
45	1 scfm, 155 W [0.21 hp]	Oily steel	3.82	1.12*	0.016	0.015

**The suction cup is not intended for handling shear lifts. The values are given as a dimensioning guide to be used when, e.g., the acceleration/ retardation causes shear forces.*

RECOMMENDED LOAD WITH BUILT-IN SAFETY FACTOR OF 2 AND RESPONSE TIME, 60° SHORE

Feed pressure psi	Air consumption and compressor power, continuous operation	Material to be handled (see table below)	Recommended perpendicular load with safety factor 2 lbf	Recommended parallel (shear) load with safety factor 2 lbf	Response time to 15 -inHg with Pi12-2 s	Response time to 15 -inHg with Pi12-3 s
45	1 scfm, 155 W [0.21 hp]	Plywood	3.60	3.37*	Response time varies based on quality	
45	1 scfm, 155 W [0.21 hp]	Corrugated	3.37	2.70*	and porosity of handled material.	
45	1 scfm, 155 W [0.21 hp]	Dry steel	3.37	4.05*	0.016	0.015
45	1 scfm, 155 W [0.21 hp]	Oily steel	3.60	1.35*	0.016	0.015

**The suction cup is not intended for handling shear lifts. The values are given as a dimensioning guide to be used when, e.g., the acceleration/ retardation causes shear forces.*

Remark: The compressor power is calculated according to: 5.5 W consumed electric power per produced scfm compressed air, valid for a normal sized 7 bar [100 psi] compressor.

NOTE: The response times are not valid for Level Compensator LC30.

Material definition: Corrugated cardboard = B Flute 3 mm, 80 Gurley seconds.

ORDERING INFORMATION

	1. COAX® cartridge	VGS code
	No COAX® cartridge (slave unit with blind plug M14x1)	AA
b	COAX® cartridge Pi12-2	AB
a	COAX® cartridge Pi12-3	AC
c	COAX® cartridge Pi12-2, non-return valve	AD
d	COAX® cartridge Pi12-3, non-return valve	AE

	2. Mounting / orientation	VGS code
	4x M4 & 1x plug G1/8" top, flush mount	00
f	M8 16 mm top	01
g	M8 16 mm right	02
e	M8 16 mm left	03
f	M8 27 mm top, profile kit	04
g	M8 27 mm right, profile kit	05
e	M8 27 mm left, profile kit	06
f	M6 22 mm screw top, profile kit	07
g	M6 22 mm screw right, profile kit	08
e	M6 22 mm screw left, profile kit	09
g	Ball joint VGS™3010 right	11
e	Ball joint VGS™3010 left	12
g	Lock-pin VGS™3010, right	13
e	Lock-pin VGS™3010, left	14
	Level Compensator LC30, 5x plug G1/8" kit	15

For more information about LC30, see separate data sheet.

3. Suction cup with fitting	VGS code
No suction cup	BA
BX35P 30°/60° Shore A	BF
BX35P 60° Shore A	BG

Example	Ordering number
VGS™3010 BX35P – Pi12-3, M8 27 mm top including profile kit, BX35P 30/60° Shore A	VGS3010.AC.04.BF

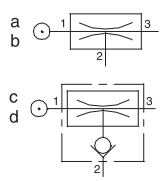

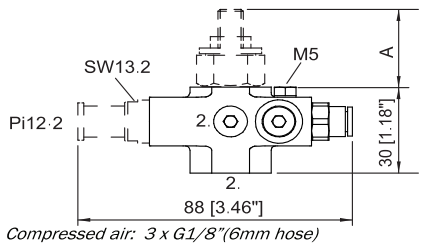

1. Compressed air: 3 x G1/8"(6mm hose)
2. Vacuum: 1 x G3/8" and 3 x G1/8"
3. Exhaust

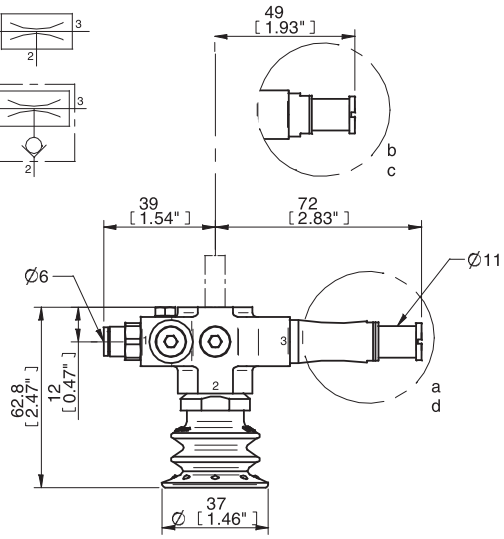

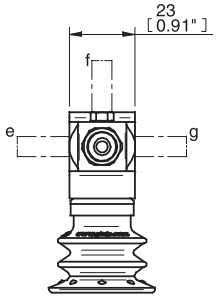

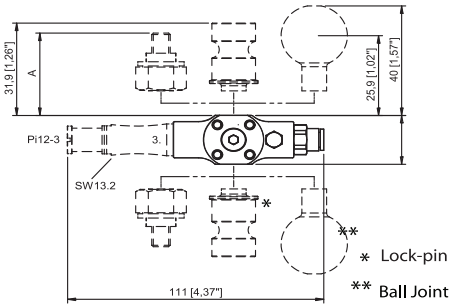

Mounting	A
M8 16	16 [0.63"]
M6 22	22 [0.87"]
M8 27	27 [1.06"]

VGS™3010 BX52P

- Patented COAX® technology
- Suitable for level adjustment and for uneven and porous surfaces, such as corrugated boxes/ containers.
- Dual hardness allowing strength and stability in conjunction with softness and flexibility.
- DURAFLEX® material features the elasticity of rubber in combination with the wear resistance of polyurethane.
- The DURAFLEX® material is mark-free.
- Separate G3/8” male suction cup fitting.
- A filter support ring in the cup keeps dust out of the system. The filter’s materials are polyester (PES41/14) and thermo-plastic-urethane (TPE).

TECHNICAL DATA

Description	Unit	Value
Feed pressure, optimum	psi	45
Feed pressure, max.	psi	101.5
Noise level	dBA	65–74
Temperature range	°F	50-122
Weight	oz	3.81-4.59
Material		PA, NBR, AL, SS, PU, Brass

RECOMMENDED LOAD WITH BUILT-IN SAFETY FACTOR OF 2 AND RESPONSE TIME, 30°/60° SHORE

Feed pressure psi	Air consumption and compressor power, continuous operation	Material to be handled (see table below)	Recommended perpendicular load with safety factor 2 lbf	Recommended parallel (shear) load with safety factor 2 lbf	Response time to 15 -inHg with Pi12-2 s	Response time to 1§5 -inHg with Pi12-3 s
45	1 scfm, 155 W [0.21 hp]	Plywood	8.09	5.17*	Response time varies based on quality	
45	1 scfm, 155 W [0.21 hp]	Corrugated	6.74	4.50*	and porosity of handled material.	
45	1 scfm, 155 W [0.21 hp]	Dry steel	8.32	6.07*	0.053	0.051
45	1 scfm, 155 W [0.21 hp]	Oily steel	7.64	2.92*	0.053	0.051

**The suction cup is not intended for handling shear lifts. The values are given as a dimensioning guide to be used when, e.g., the acceleration/ retardation causes shear forces.*

RECOMMENDED LOAD WITH BUILT-IN SAFETY FACTOR OF 2 AND RESPONSE TIME, 60° SHORE

Feed pressure psi	Air consumption and compressor power, continuous operation	Material to be handled (see table below)	Recommended perpendicular load with safety factor 2 lbf	Recommended parallel (shear) load with safety factor 2 lbf	Response time to 15 -inHg with Pi12-2 s	Response time to 15 -inHg with Pi12-3 s
45	1 scfm, 155 W [0.21 hp]	Plywood	7.42	6.52*	Response time varies based on quality	
45	1 scfm, 155 W [0.21 hp]	Corrugated	8.32	4.27*	and porosity of handled material.	
45	1 scfm, 155 W [0.21 hp]	Dry steel	8.99	5.85*	0.053	0.051
45	1 scfm, 155 W [0.21 hp]	Oily steel	8.99	3.15*	0.053	0.051

**The suction cup is not intended for handling shear lifts. The values are given as a dimensioning guide to be used when, e.g., the acceleration/ retardation causes shear forces.*

Remark: The compressor power is calculated according to: 5.5 W consumed electric power per produced scfm compressed air, valid for a normal sized 7 bar [100 psi] compressor.

NOTE: The response times are not valid for Level Compensator LC30.

Material definition: Corrugated cardboard = B Flute 3 mm, 80 Gurley seconds.

ORDERING INFORMATION

	1. COAX® cartridge	VGS code
	No COAX® cartridge (slave unit with blind plug M14x1)	AA
b	COAX® cartridge Pi12-2	AB
a	COAX® cartridge Pi12-3	AC
c	COAX® cartridge Pi12-2, non-return valve	AD
d	COAX® cartridge Pi12-3, non-return valve	AE

	2. Mounting / orientation	VGS code
	4x M4 & 1x plug G1/8" top, flush mount	00
f	M8 16 mm top	01
g	M8 16 mm right	02
e	M8 16 mm left	03
f	M8 27 mm top, profile kit	04
g	M8 27 mm right, profile kit	05
e	M8 27 mm left, profile kit	06
f	M6 22 mm screw top, profile kit	07
g	M6 22 mm screw right, profile kit	08
e	M6 22 mm screw left, profile kit	09
g	Ball joint VGS™3010 right	11
e	Ball joint VGS™3010 left	12
g	Lock-pin VGS™3010, right	13
e	Lock-pin VGS™3010, left	14
	Level Compensator LC30, 5x plug G1/8" kit	15

For more information about LC30, see separate data sheet.

3. Suction cup with fitting	VGS code
No suction cup	BA
BX52P 30°/60° Shore A	BH
BX52P 60° Shore A	BI

Example	Ordering number
VGS™3010 BX52P – Pi12-3, M8 27 mm top including profile kit, BX52P 30/60° Shore A	VGS3010.AC.04.BH

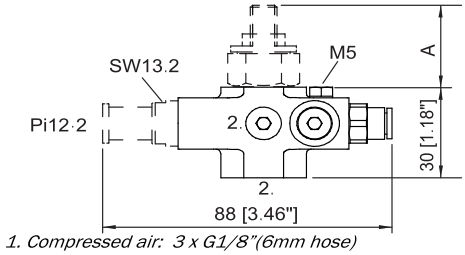

1. Compressed air: 3 x G1/8"(6mm hose)
2. Vacuum: 1 x G3/8" and 3 x G1/8"
3. Exhaust

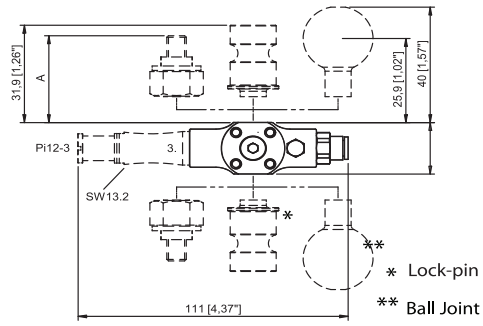

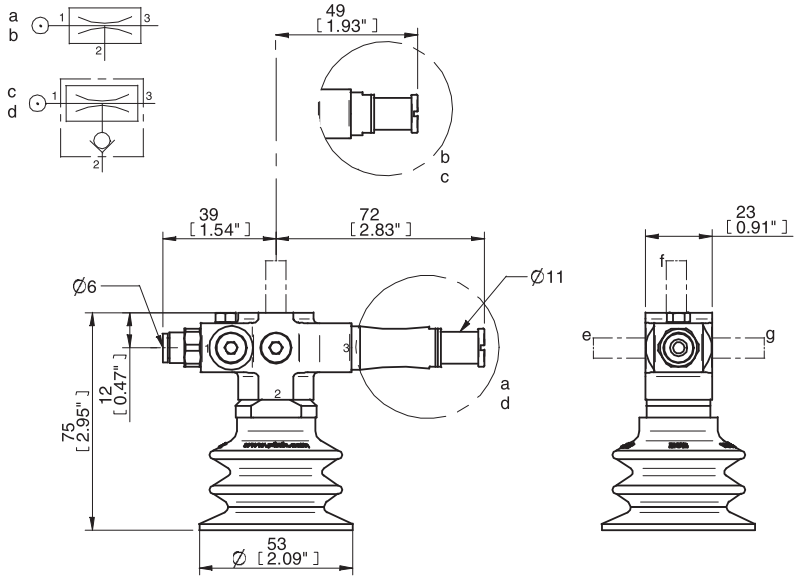

Mounting	A
M8 16	16 [0.63"]
M6 22	22 [0.87"]
M8 27	27 [1.06"]

VGS™3010 BX75P

- Patented COAX® technology
- Suitable for level adjustment and for uneven and porous surfaces, such as corrugated boxes/ containers.
- Dual hardness allowing strength and stability in conjunction with softness and flexibility.
- DURAFLEX® material features the elasticity of rubber in combination with the wear resistance of polyurethane.
- The DURAFLEX® material is mark-free.
- Molded suction cup fitting with removable thread insert, male G3/8".
- A filter support ring in the cup keeps dust out of the system. The filter's materials are polyester (PES41/14) and thermo-plastic-urethane (TPE).

TECHNICAL DATA

Description	Unit	Value
Feed pressure, optimum	psi	45
Feed pressure, max.	psi	101.5
Noise level	dBA	65–74
Temperature range	°F	50-122
Weight	oz	5.29-6.10
Material		PA, NBR, AL, SS, PU, Brass

RECOMMENDED LOAD WITH BUILT-IN SAFETY FACTOR OF 2 AND RESPONSE TIME, 30°/60° SHORE

Feed pressure psi	Air consumption and compressor power, continuous operation	Material to be handled (see table below)	Recommended perpendicular load with safety factor 2 lbf	Recommended parallel (shear) load with safety factor 2 lbf	Response time to 15 -inHg with Pi12-2 s	Response time to 15 -inHg with Pi12-3 s
45	1 scfm, 155 W [0.21 hp]	Plywood	16.2	12.1*	Response time varies based on quality	
45	1 scfm, 155 W [0.21 hp]	Corrugated	12.6	7.87*	and porosity of handled material.	
45	1 scfm, 155 W [0.21 hp]	Dry steel	16.6	13.0*	0.115	0.111
45	1 scfm, 155 W [0.21 hp]	Oily steel	16.6	7.19*	0.115	0.111

**The suction cup is not intended for handling shear lifts. The values are given as a dimensioning guide to be used when, e.g., the acceleration/ retardation causes shear forces.*

RECOMMENDED LOAD WITH BUILT-IN SAFETY FACTOR OF 2 AND RESPONSE TIME, 60° SHORE

Feed pressure psi	Air consumption and compressor power, continuous operation	Material to be handled (see table below)	Recommended perpendicular load with safety factor 2 lbf	Recommended parallel (shear) load with safety factor 2 lbf	Response time to 15 -inHg with Pi12-2 s	Response time to 15 -inHg with Pi12-3 s
45	1 scfm, 155 W [0.21 hp]	Plywood	19.1	12.6*	Response time varies based on quality	
45	1 scfm, 155 W [0.21 hp]	Corrugated	13.9	6.29*	and porosity of handled material.	
45	1 scfm, 155 W [0.21 hp]	Dry steel	18.7	16.9*	0.115	0.111
45	1 scfm, 155 W [0.21 hp]	Oily steel	19.1	10.8*	0.115	0.111

**The suction cup is not intended for handling shear lifts. The values are given as a dimensioning guide to be used when, e.g., the acceleration/ retardation causes shear forces.*

Remark: The compressor power is calculated according to: 5.5 W consumed electric power per produced scfm compressed air, valid for a normal sized 7 bar [100 psi] compressor.

NOTE: The response times are not valid for Level Compensator LC30.

Material definition: Corrugated cardboard = B Flute 3 mm, 80 Gurley seconds.

ORDERING INFORMATION

	1. COAX® cartridge	VGS code
	No COAX® cartridge (slave unit with blind plug M14x1)	AA
b	COAX® cartridge Pi12-2	AB
a	COAX® cartridge Pi12-3	AC
c	COAX® cartridge Pi12-2, non-return valve	AD
d	COAX® cartridge Pi12-3, non-return valve	AE

	2. Mounting / orientation	VGS code
	4x M4 & 1x plug G1/8" top, flush mount	00
f	M8 16 mm top	01
g	M8 16 mm right	02
e	M8 16 mm left	03
f	M8 27 mm top, profile kit	04
g	M8 27 mm right, profile kit	05
e	M8 27 mm left, profile kit	06
f	M6 22 mm screw top, profile kit	07
g	M6 22 mm screw right, profile kit	08
e	M6 22 mm screw left, profile kit	09
g	Ball joint VGS™3010 right	11
e	Ball joint VGS™3010 left	12
g	Lock-pin VGS™3010, right	13
e	Lock-pin VGS™3010, left	14
	Level Compensator LC30, 5x plug G1/8" kit	15

For more information about LC30, see separate data sheet.

3. Suction cup with fitting	VGS code
No suction cup	BA
BX75P 30°/60° Shore A	BJ
BX75P 60° Shore A	BK

Example	Ordering number
VGS™3010 BX75P – Pi12-3, M8 27 mm top including profile kit, BX75P 30/60° Shore A	VGS3010.AC.04.BJ

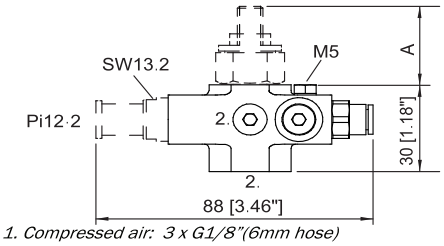

1. Compressed air: 3 x G1/8"(6mm hose)
2. Vacuum: 1 x G3/8" and 3 x G1/8"
3. Exhaust

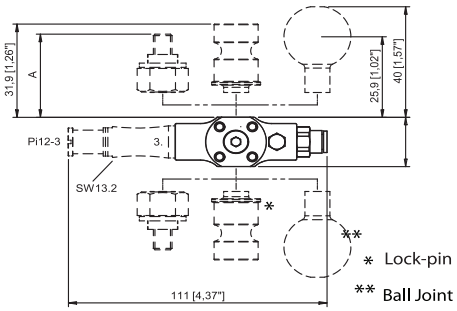

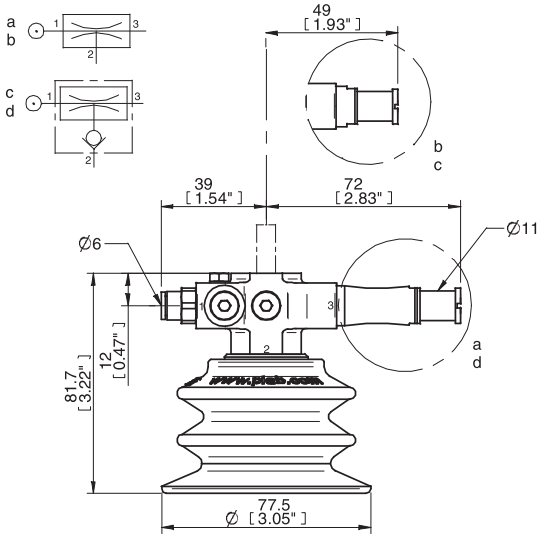

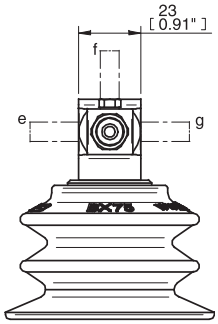

Mounting	A
M8 16	16 [0.63"]
M6 22	22 [0.87"]
M8 27	27 [1.06"]

VGS™3010 BX110P

- Patented COAX® technology
- Suitable for level adjustment and for uneven and porous surfaces, such as corrugated boxes/ containers.
- Dual hardness allowing strength and stability in conjunction with softness and flexibility.
- DURAFLEX® material features the elasticity of rubber in combination with the wear resistance of polyurethane.
- The DURAFLEX® material is mark-free.
- Molded suction cup fitting with removable thread insert, male G3/8".
- A filter support ring in the cup keeps dust out of the system. The filter's materials are polyester (PES41/ 14) and thermo-plastic-urethane (TPE).

TECHNICAL DATA

Description	Unit	Value
Feed pressure max.	psi	101.5
Noise level	dBA	65–74
Temperature range	°F	50-122
Weight	oz	3.70-11.0
Material		PA, NBR, AL, SS, PU, Brass

RECOMMENDED LOAD WITH BUILT-IN SAFETY FACTOR OF 2 AND RESPONSE TIME, 30°/60° SHORE

Feed pressure psi	Air consumption and compressor power, continuous operation	Material to be handled (see table below)	Recommended perpendicular load with safety factor 2 lbf	Recommended parallel (shear) load with safety factor 2 lbf	Response time to 15 -inHg with Pi12-2 s	Response time to 15 -inHg with Pi12-3 s
45	1 scfm, 155 W [0.21 hp]	Plywood	33.9	18.0*	Response time varies based on quality	
45	1 scfm, 155 W [0.21 hp]	Corrugated	15.3	14.6*	and porosity of handled material.	
45	1 scfm, 155 W [0.21 hp]	Dry steel	32.6	20.2*	0.41	0.39
45	1 scfm, 155 W [0.21 hp]	Oily steel	31.5	10.6*	0.41	0.39

**The suction cup is not intended for handling shear lifts. The values are given as a dimensioning guide to be used when, e.g., the acceleration/ retardation causes shear forces.*

RECOMMENDED LOAD WITH BUILT-IN SAFETY FACTOR OF 2 AND RESPONSE TIME, 60° SHORE

Feed pressure psi	Air consumption and compressor power, continuous operation	Material to be handled (see table below)	Recommended perpendicular load with safety factor 2 lbf	Recommended parallel (shear) load with safety factor 2 lbf	Response time to 15 -inHg with Pi12-2 s	Response time to 15 -inHg with Pi12-3 s
45	1 scfm, 155 W [0.21 hp]	Plywood	31.5	21.4*	Response time varies based on quality	
45	1 scfm, 155 W [0.21 hp]	Corrugated	22.0	15.3*	and porosity of handled material.	
45	1 scfm, 155 W [0.21 hp]	Dry steel	33.0	26.1*	0.41	0.39
45	1 scfm, 155 W [0.21 hp]	Oily steel	33.5	14.2*	0.41	0.39

**The suction cup is not intended for handling shear lifts. The values are given as a dimensioning guide to be used when, e.g., the acceleration/ retardation causes shear forces.*

Remark: The compressor power is calculated according to: 5.5 W consumed electric power per produced scfm compressed air, valid for a normal sized 7 bar [100 psi] compressor.

NOTE: The response times are not valid for Level Compensator LC30.

Material definition: Corrugated cardboard = B Flute 3 mm, 80 Gurley seconds.

ORDERING INFORMATION

	1. COAX® cartridge	VGS code
	No COAX® cartridge (slave unit with blind plug M14x1)	AA
b	COAX® cartridge Pi12-2	AB
a	COAX® cartridge Pi12-3	AC
c	COAX® cartridge Pi12-2, non-return valve	AD
d	COAX® cartridge Pi12-3, non-return valve	AE

	2. Mounting / orientation	VGS code
	4x M4 & 1x plug G1/8" top, flush mount	00
f	M8 16 mm top	01
g	M8 16 mm right	02
e	M8 16 mm left	03
f	M8 27 mm top, profile kit	04
g	M8 27 mm right, profile kit	05
e	M8 27 mm left, profile kit	06
f	M6 22 mm screw top, profile kit	07
g	M6 22 mm screw right, profile kit	08
e	M6 22 mm screw left, profile kit	09
g	Ball joint VGS™3010 right	11
e	Ball joint VGS™3010 left	12
g	Lock-pin VGS™3010, right	13
e	Lock-pin VGS™3010, left	14
	Level Compensator LC30, 5x plug G1/8" kit	15

For more information about LC30, see separate data sheet.

3. Suction cup with fitting	VGS code
No suction cup	BA
BX110P 30°/60° Shore A	CQ
BX110P 60° Shore A	CR

Example	Ordering number
VGS™3010 BX110P – Pi12-3, M8 27 mm top including profile kit, BX110P 30/60° Shore A	VGS3010 AC 04 CQ

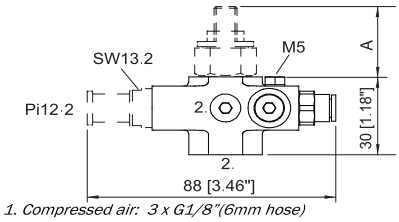

1. Compressed air: 3 x G1/8"(6mm hose)
2. Vacuum: 1 x G3/8" and 3 x G1/8"
3. Exhaust

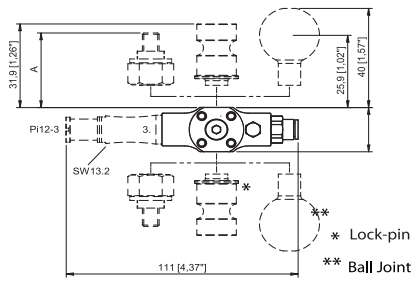

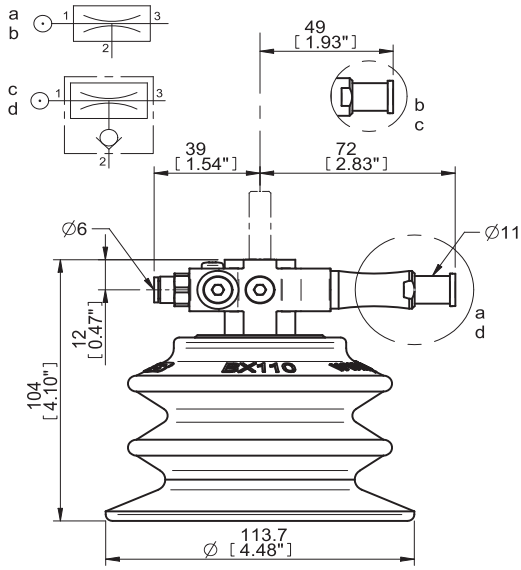

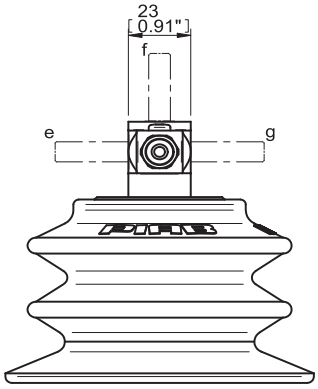

Mounting	A
M8 16	16 [0.63"]
M6 22	22 [0.87"]
M8 27	27 [1.06"]

VGS™3010 BX52P WITH STABILIZER

- Patented COAX® technology
- Suitable for extra stability when handling plates, sheets or boxes. Reduces the need for extra suction cups to create stability.
- The supports are adjustable in order to help handle difficult-to-grasp objects with vacuum. Rubber pads included for the legs in order to prevent scratches.
- Dual hardness allowing strength and stability in conjunction with softness and flexibility.
- DURAFLEX® material features the elasticity of rubber in combination with the wear resistance of polyurethane.
- The DURAFLEX® material is mark-free.
- A filter support ring in the cup keeps dust out of the system. The filter's materials are polyester (PES41/14) and thermo-plastic-urethane (TPE).
- Separate G3/8" male suction cup fitting.

TECHNICAL DATA

Description	Unit	Value
Feed pressure, optimum	psi	45
Feed pressure, max.	psi	101.50.7
Noise level	dBA	65–74
Temperature range	°F	50-122
Weight	oz	7.09-7.90
Material		PA, NBR, AL, SS, PU, Brass

RECOMMENDED LOAD WITH BUILT-IN SAFETY FACTOR OF 2 AND RESPONSE TIME, 30°/60° SHORE WITH STABILIZER

Feed pressure psi	Air consumption and compressor power, continuous operation	Material to be handled (see table below)	Recommended perpendicular load with safety factor 2 lbf	Recommended parallel (shear) load with safety factor 2 lbf	Response time to 15 -inHg with Pi12-2 s	Response time to 15 -inHg with Pi12-3 s
45	1 scfm, 155 W [0.21 hp]	Plywood	7.19	5.17*	Response time varies based on quality and porosity of handled material.	
45	1 scfm, 155 W [0.21 hp]	Corrugated	5.17	4.50*		
45	1 scfm, 155 W [0.21 hp]	Dry steel	7.42	6.07*	0.053	0.051
45	1 scfm, 155 W [0.21 hp]	Oily steel	7.42	2.92*	0.053	0.051

**The suction cup is not intended for handling shear lifts. The values are given as a dimensioning guide to be used when, e.g., the acceleration/retardation causes shear forces.*

RECOMMENDED LOAD WITH BUILT-IN SAFETY FACTOR OF 2 AND RESPONSE TIME, 60° SHORE WITH STABILIZER

Feed pressure psi	Air consumption and compressor power, continuous operation	Material to be handled (see table below)	Recommended perpendicular load with safety factor 2 lbf	Recommended parallel (shear) load with safety factor 2 lbf	Response time to 15 -inHg with Pi12-2 s	Response time to 15 -inHg with Pi12-3 s
45	1 scfm, 155 W [0.21 hp]	Plywood	7.19	6.52*	Response time varies based on quality and porosity of handled material.	
45	1 scfm, 155 W [0.21 hp]	Corrugated	4.72	4.27*		
45	1 scfm, 155 W [0.21 hp]	Dry steel	7.42	5.85*	0.053	0.051
45	1 scfm, 155 W [0.21 hp]	Oily steel	7.42	3.15*	0.053	0.051

**The suction cup is not intended for handling shear lifts. The values are given as a dimensioning guide to be used when, e.g., the acceleration/retardation causes shear forces.*

Remark: The compressor power is calculated according to: 5.5 W consumed electric power per produced scfm compressed air, valid for a normal sized 7 bar [100 psi] compressor.

Material definition: Corrugated cardboard = B Flute 3 mm, 80 Gurley seconds.

ORDERING INFORMATION

	1. COAX® cartridge	VGS code
	No COAX® cartridge (slave unit with blind plug M14x1)	AA
b	COAX® cartridge Pi12-2	AB
a	COAX® cartridge Pi12-3	AC
c	COAX® cartridge Pi12-2, non-return valve	AD
d	COAX® cartridge Pi12-3, non-return valve	AE

2. Mounting / orientation	VGS code
M8 16 mm top	01
M8 27 mm top, profile kit	04
M6 22 mm screw top, profile kit	07

3. Suction cup with fitting	VGS code
BX52P 30°/60° Shore A with Stabilizer 50	BW
BX52P 60° Shore A with Stabilizer 50	BX

Example	Ordering number
VGS™3010 BX52P – Pi12-3, M8 27 mm top including profile kit, BX52P 30/60° Shore A with stabilizer 50	VGS3010.AC.04.BW

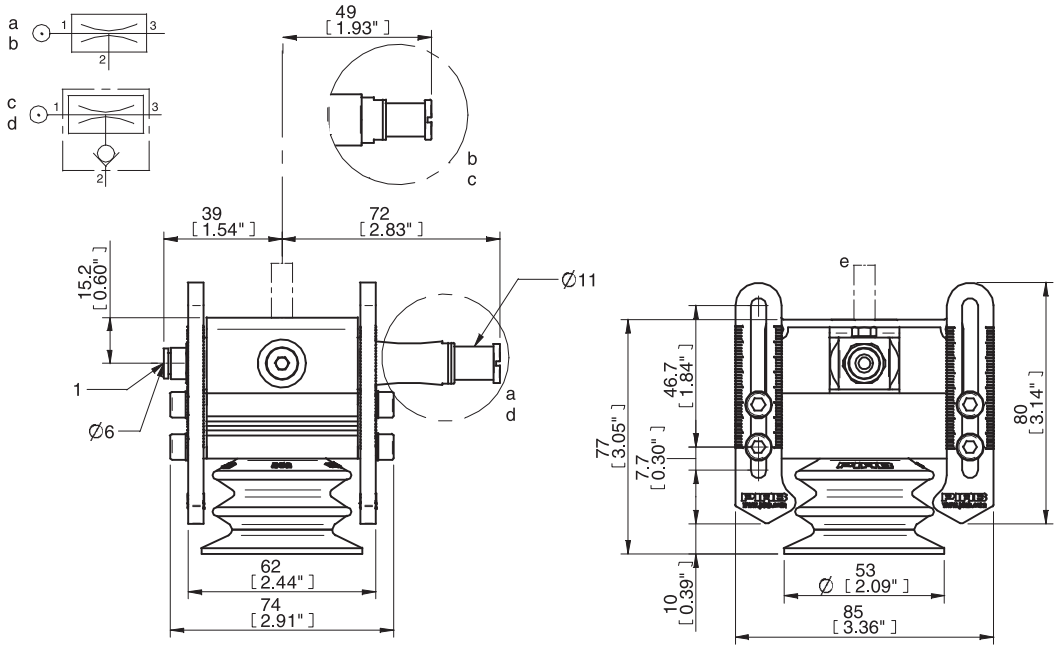

VGS™3010 BX75P WITH STABILIZER

- Patented COAX® technology
- Suitable for extra stability when handling plates, sheets or boxes. Reduces the need for extra suction cups to create stability.
- The supports are adjustable in order to help handle difficult-to-grasp objects with vacuum. Rubber pads included for the legs in order to prevent scratches.
- Dual hardness allowing strength and stability in conjunction with softness and flexibility.
- DURAFLEX® material features the elasticity of rubber in combination with the wear resistance of polyurethane.
- The DURAFLEX® material is mark-free.
- A filter support ring in the cup keeps dust out of the system. The filter's materials are polyester (PES41/14) and thermo-plastic-urethane (TPE).
- Molded suction cup fitting with removable G3/8" male thread insert.

TECHNICAL DATA

Description	Unit	Value
Feed pressure, optimum	psi	45
Feed pressure, max.	psi	101.5
Noise level	dBA	65–74
Temperature range	°F	50-122
Weight	oz	9.49-10.3
Material		PA, NBR, AL, SS, PU, Brass

RECOMMENDED LOAD WITH BUILT-IN SAFETY FACTOR OF 2 AND RESPONSE TIME, 30°/60° SHORE WITH STABILIZER

Feed pressure psi	Air consumption and compressor power, continuous operation	Material to be handled (see table below)	Recommended perpendicular load with safety factor 2 lbf	Recommended parallel (shear) load with safety factor 2 lbf	Response time to 15 -inHg with Pi12-2 s	Response time to 15 -inHg with Pi12-3 s
45	1 scfm, 155 W [0.21 hp]	Plywood	15.7	12.1*	Response time varies based on quality and porosity of handled material.	
45	1 scfm, 155 W [0.21 hp]	Corrugated	8.32	7.87*		
45	1 scfm, 155 W [0.21 hp]	Dry steel	16.4	13.0*	0.115	0.111
45	1 scfm, 155 W [0.21 hp]	Oily steel	16.9	7.19*	0.115	0.111

**The suction cup is not intended for handling shear lifts. The values are given as a dimensioning guide to be used when, e.g., the acceleration/retardation causes shear forces.*

RECOMMENDED LOAD WITH BUILT-IN SAFETY FACTOR OF 2 AND RESPONSE TIME, 60° SHORE WITH STABILIZER

Feed pressure psi	Air consumption and compressor power, continuous operation	Material to be handled (see table below)	Recommended perpendicular load with safety factor 2 lbf	Recommended parallel (shear) load with safety factor 2 lbf	Response time to 15 -inHg with Pi12-2 s	Response time to 15 -inHg with Pi12-3 s
45	1 scfm, 155 W [0.21 hp]	Plywood	14.6	12.6*	Response time varies based on quality and porosity of handled material.	
45	1 scfm, 155 W [0.21 hp]	Corrugated	6.29	6.29*		
45	1 scfm, 155 W [0.21 hp]	Dry steel	14.4	16.9*	0.115	0.111
45	1 scfm, 155 W [0.21 hp]	Oily steel	14.8	10.8*	0.115	0.111

**The suction cup is not intended for handling shear lifts. The values are given as a dimensioning guide to be used when, e.g., the acceleration/retardation causes shear forces.*

Remark: The compressor power is calculated according to: 5.5 W consumed electric power per produced scfm compressed air, valid for a normal sized 7 bar [100 psi] compressor.

Material definition: Corrugated cardboard = B Flute 3 mm, 80 Gurley seconds.

ORDERING INFORMATION

	1. COAX® cartridge	VGS code
	No COAX® cartridge (slave unit with blind plug M14x1)	AA
b	COAX® cartridge Pi12-2	AB
a	COAX® cartridge Pi12-3	AC
c	COAX® cartridge Pi12-2, non-return valve	AD
d	COAX® cartridge Pi12-3, non-return valve	AE

2. Mounting / orientation	VGS code
M8 16 mm top	01
M8 27 mm top, profile kit	04
M6 22 mm screw top, profile kit	07

3. Suction cup with fitting	VGS code
BX75P 30°/60° Shore A with Stabilizer 75	BY
BX75P 60° Shore A with Stabilizer 75	BZ

Example	Ordering number
VGS™3010 BX75P – Pi12-3, M8 27 mm top including profile kit, BX75P 30/60° Shore A with stabilizer 75	VGS3010.AC.04.BY

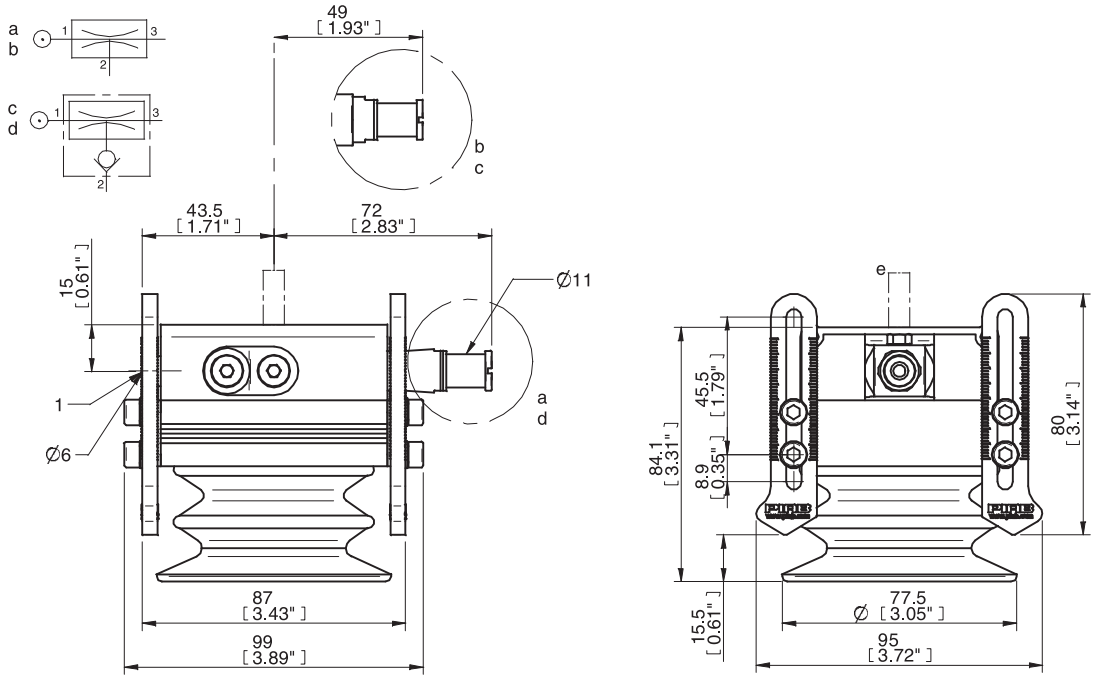

VGS™3010 FC50P

- Patented COAX® technology
- Suitable for slightly domed and flat oily surfaces, i.e. handling steel or aluminium sheets in press process.
- Due to high friction of the rubber material, the suction cups can withstand high forces at rapid accelerations in horizontal directions, even on oily surfaces.
- DURAFLEX® material features the elasticity of rubber in combination with the wear resistance of polyurethane.
- The DURAFLEX® material is mark-free.
- Molded G3/8” male suction cup fitting.

TECHNICAL DATA

Description	Unit	Value
Feed pressure, optimum	psi	45
Feed pressure, max.	psi	101.5
Noise level	dBA	65–74
Temperature range	°F	50-122
Weight	oz	3.39-4.20
Material		PA, NBR, AL, SS, PU, Brass

RECOMMENDED LOAD WITH BUILT-IN SAFETY FACTOR OF 2 AND RESPONSE TIME, 40° SHORE

Feed pressure psi	Air consumption and compressor power, continuous operation	Material to be handled (see table below)	Recommended perpendicular load with safety factor 2 lbf	Recommended parallel (shear) load with safety factor 2 lbf	Response time to 15 -inHg with Pi12-2 s	Response time to 15 -inHg with Pi12-3 s
45	1 scfm, 155 W [0.21 hp]	Plywood	11.2	11.9	Response time varies based on quality	
45	1 scfm, 155 W [0.21 hp]	Corrugated	8.09	9.44	and porosity of handled material.	
45	1 scfm, 155 W [0.21 hp]	Dry steel	12.4	13.0	0.018	0.017
45	1 scfm, 155 W [0.21 hp]	Oily steel	11.5	9.89	0.018	0.017

RECOMMENDED LOAD WITH BUILT-IN SAFETY FACTOR OF 2 AND RESPONSE TIME, 60° SHORE

Feed pressure psi	Air consumption and compressor power, continuous operation	Material to be handled (see table below)	Recommended perpendicular load with safety factor 2 lbf	Recommended parallel (shear) load with safety factor 2 lbf	Response time to 15 -inHg with Pi12-2 s	Response time to 15 -inHg with Pi12-3 s
45	1 scfm, 155 W [0.21 hp]	Plywood	11.2	13.7	Response time varies based on quality and	
45	1 scfm, 155 W [0.21 hp]	Corrugated	7.64	10.1	porosity of handled material.	
45	1 scfm, 155 W [0.21 hp]	Dry steel	12.8	15.7	0.018	0.017
45	1 scfm, 155 W [0.21 hp]	Oily steel	10.3	3.60	0.018	0.017

Remark: The compressor power is calculated according to: 5.5 W consumed electric power per produced scfm compressed air, valid for a normal sized 7 bar [100 psi] compressor.

NOTE: The response times are not valid for Level Compensator LC30.

Material definition: Corrugated cardboard = B Flute 3 mm, 80 Gurley seconds.

ORDERING INFORMATION

	1. COAX® cartridge	VGS code
	No COAX® cartridge (slave unit with blind plug M14x1)	AA
b	COAX® cartridge Pi12-2	AB
a	COAX® cartridge Pi12-3	AC
c	COAX® cartridge Pi12-2, non-return valve	AD
d	COAX® cartridge Pi12-3, non-return valve	AE

	2. Mounting / orientation	VGS code
	4x M4 & 1x plug G1/8" top, flush mount	00
f	M8 16 mm top	01
g	M8 16 mm right	02
e	M8 16 mm left	03
f	M8 27 mm top, profile kit	04
g	M8 27 mm right, profile kit	05
e	M8 27 mm left, profile kit	06
f	M6 22 mm screw top, profile kit	07
g	M6 22 mm screw right, profile kit	08
e	M6 22 mm screw left, profile kit	09
g	Ball joint VGS™3010 right	11
e	Ball joint VGS™3010 left	12
g	Lock-pin VGS™3010, right	13
e	Lock-pin VGS™3010, left	14
	Level Compensator LC30, 5x plug G1/8" kit	15

For more information about LC30, see separate data sheet.

3. Suction cup with fitting	VGS code
No suction cup	BA
FC50P 40° Shore A	BP
FC50P 60° Shore A	BQ

Example	Ordering number
VGS™3010 FC50P – Pi12-3, M8 27 mm top including profile kit, FC50P 40° Shore A	VGS3010.AC.04.BP

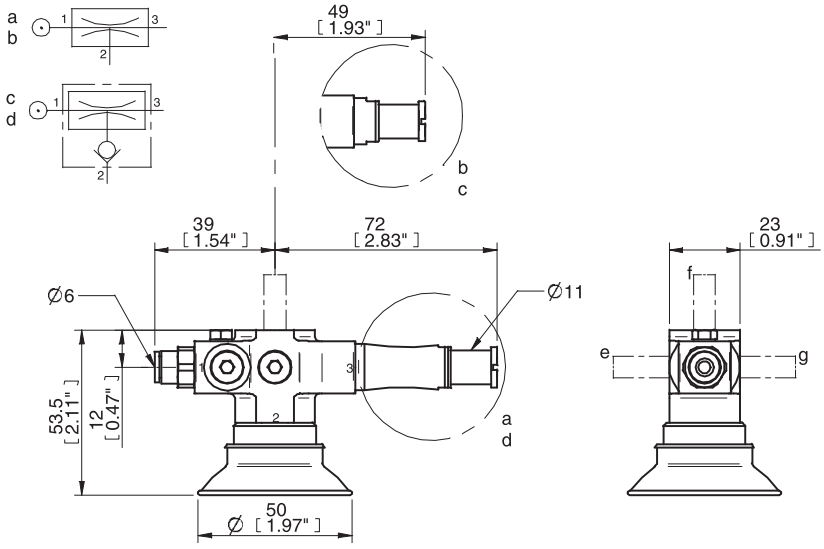

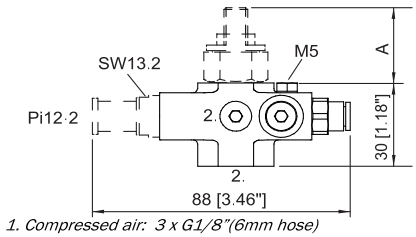

1. Compressed air: 3 x G1/8"(6mm hose)
2. Vacuum: 1 x G3/8" and 3 x G1/8"
3. Exhaust

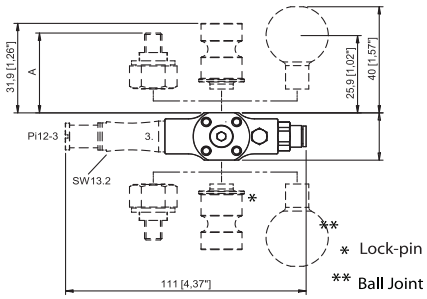

Mounting	A
M8 16	16 [0.63"]
M6 22	22 [0.87"]
M8 27	27 [1.06"]

VGS™3010 FC75P

- Patented COAX® technology
- Suitable for slightly domed and flat oily surfaces, i.e. handling steel or aluminium sheets in press process.
- Due to high friction of the rubber material, the suction cups can withstand high forces at rapid accelerations in horizontal directions, even on oily surfaces.
- DURAFLEX® material features the elasticity of rubber in combination with the wear resistance of polyurethane.
- The DURAFLEX® material is mark-free.
- Molded suction cup fitting with removable G3/8" male thread insert.

TECHNICAL DATA

Description	Unit	Value
Feed pressure, optimum	psi	45
Feed pressure, max.	psi	101.5
Noise level	dBA	65–74
Temperature range	°F	50-122
Weight	oz	3.91-4.69
Material		PA, NBR, AL, SS, PU, Brass

RECOMMENDED LOAD WITH BUILT-IN SAFETY FACTOR OF 2 AND RESPONSE TIME, 40° SHORE

Feed pressure psi	Air consumption and compressor power, continuous operation	Material to be handled (see table below)	Recommended perpendicular load with safety factor 2 lbf	Recommended parallel (shear) load with safety factor 2 lbf	Response time to 15 -inHg with Pi12-2 s	Response time to 15 -inHg with Pi12-3 s
45	1 scfm, 155 W [0.21 hp]	Plywood	22.9	26.3	Response time varies based on quality	
45	1 scfm, 155 W [0.21 hp]	Corrugated	12.8	16.0	and porosity of handled material.	
45	1 scfm, 155 W [0.21 hp]	Dry steel	22.5	29.4	0.053	0.051
45	1 scfm, 155 W [0.21 hp]	Oily steel	22.5	14.2	0.053	0.051

RECOMMENDED LOAD WITH BUILT-IN SAFETY FACTOR OF 2 AND RESPONSE TIME, 60° SHORE

Feed pressure psi	Air consumption and compressor power, continuous operation	Material to be handled (see table below)	Recommended perpendicular load with safety factor 2 lbf	Recommended parallel (shear) load with safety factor 2 lbf	Response time to 15 -inHg with Pi12-2 s	Response time to 15 -inHg with Pi12-3 s
45	1 scfm, 155 W [0.21 hp]	Plywood	26.3	27.2	Response time varies based on quality.	
45	1 scfm, 155 W [0.21 hp]	Corrugated	13.3	13.0	and porosity of handled material.	
45	1 scfm, 155 W [0.21 hp]	Dry steel	27.7	20.2	0.053	0.051
45	1 scfm, 155 W [0.21 hp]	Oily steel	25.4	7.64	0.053	0.051

Remark: The compressor power is calculated according to: 5.5 W consumed electric power per produced scfm compressed air, valid for a normal sized 7 bar [100 psi] compressor.

NOTE: The response times are not valid for Level Compensator LC30.

Material definition: Corrugated cardboard = B Flute 3 mm, 80 Gurley seconds.

ORDERING INFORMATION

	1. COAX® cartridge	VGS code
	No COAX® cartridge (slave unit with blind plug M14x1)	AA
b	COAX® cartridge Pi12-2	AB
a	COAX® cartridge Pi12-3	AC
c	COAX® cartridge Pi12-2, non-return valve	AD
d	COAX® cartridge Pi12-3, non-return valve	AE

	2. Mounting / orientation	VGS code
	4x M4 & 1x plug G1/8" top, flush mount	00
f	M8 16 mm top	01
g	M8 16 mm right	02
e	M8 16 mm left	03
f	M8 27 mm top, profile kit	04
g	M8 27 mm right, profile kit	05
e	M8 27 mm left, profile kit	06
f	M6 22 mm screw top, profile kit	07
g	M6 22 mm screw right, profile kit	08
e	M6 22 mm screw left, profile kit	09
g	Ball joint VGS™3010 right	11
e	Ball joint VGS™3010 left	12
g	Lock-pin VGS™3010, right	13
e	Lock-pin VGS™3010, left	14
	Level Compensator LC30, 5x plug G1/8" kit	15

For more information about LC30, see separate data sheet.

3. Suction cup with fitting	VGS code
No suction cup	BA
FC75P 40° Shore A	BR
FC75P 60° Shore A	BS

Example	Ordering number
VGS™3010 FC75P – Pi12-3, M8 27 mm top including profile kit, FC75P 40° Shore A	VGS3010.AC.04.BR

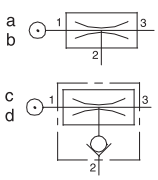

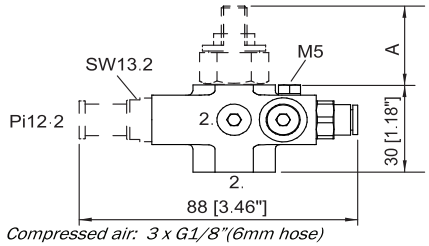

1. Compressed air: 3 x G1/8"(6mm hose)
2. Vacuum: 1 x G3/8" and 3 x G1/8"
3. Exhaust

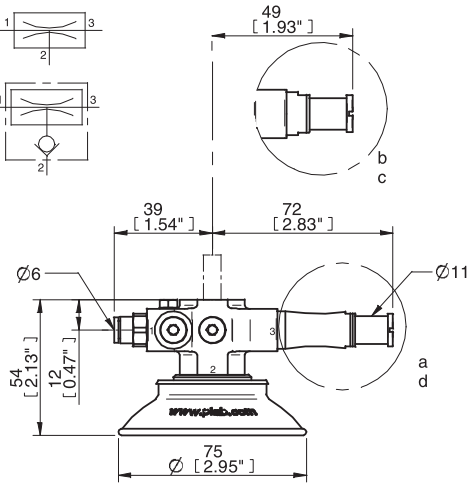

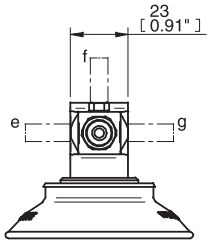

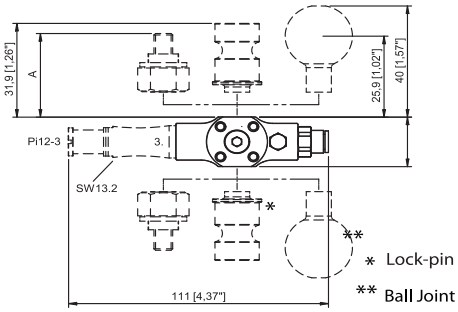

Mounting	A
M8 16	16 [0.63"]
M6 22	22 [0.87"]
M8 27	27 [1.06"]

VGS™3010 FC100P

- Patented COAX® technology
- Suitable for slightly domed and flat oily surfaces, i.e. handling steel or aluminium sheets in press process.
- Due to high friction of the rubber material, the suction cups can withstand high forces at rapid accelerations in horizontal directions, even on oily surfaces.
- DURAFLEX® material features the elasticity of rubber in combination with the wear resistance of polyurethane.
- The DURAFLEX® material is mark-free.
- Molded suction cup fitting with removable G3/8" male thread insert.

TECHNICAL DATA

Description	Unit	Value
Feed pressure, optimum	psi	45
Feed pressure, max.	psi	101.5
Noise level	dBA	65–74
Temperature range	°F	50-122
Weight	oz	5.71-6.49
Material		PA, NBR, AL, SS, PU, Brass

RECOMMENDED LOAD WITH BUILT-IN SAFETY FACTOR OF 2 AND RESPONSE TIME, 40° SHORE

Feed pressure psi	Air consumption and compressor power, continuous operation	Material to be handled (see table below)	Recommended perpendicular load with safety factor 2 lbf	Recommended parallel (shear) load with safety factor 2 lbf	Response time to 15 -inHg with Pi12-2 s	Response time to 15 -inHg with Pi12-3 s
45	1 scfm, 155 W [0.21 hp]	Plywood	42.5	48.3	Response time varies based on quality	
45	1 scfm, 155 W [0.21 hp]	Corrugated	13.5	22.5	and porosity of handled material.	
45	1 scfm, 155 W [0.21 hp]	Dry steel	46.8	51.7	0.142	0.136
45	1 scfm, 155 W [0.21 hp]	Oily steel	39.1	12.6	0.142	0.136

RECOMMENDED LOAD WITH BUILT-IN SAFETY FACTOR OF 2 AND RESPONSE TIME, 60° SHORE

Feed pressure psi	Air consumption and compressor power, continuous operation	Material to be handled (see table below)	Recommended perpendicular load with safety factor 2 lbf	Recommended parallel (shear) load with safety factor 2 lbf	Response time to 15 -inHg with Pi12-2 s	Response time to 15 -inHg with Pi12-3 s
45	1 scfm, 155 W [0.21 hp]	Plywood	49.7	40.0	Response time varies based on quality and	
45	1 scfm, 155 W [0.21 hp]	Corrugated	16.0	19.6	porosity of handled material.	
45	1 scfm, 155 W [0.21 hp]	Dry steel	57.3	53.5	0.142	0.136
45	1 scfm, 155 W [0.21 hp]	Oily steel	48.8	11.7	0.142	0.136

Remark: The compressor power is calculated according to: 5.5 W consumed electric power per produced scfm compressed air, valid for a normal sized 7 bar [100 psi] compressor.

NOTE: The response times are not valid for Level Compensator LC30.

Material definition: Corrugated cardboard = B Flute 3 mm, 80 Gurley seconds.

ORDERING INFORMATION

	1. COAX® cartridge	VGS code
	No COAX® cartridge (slave unit with blind plug M14x1)	AA
b	COAX® cartridge Pi12-2	AB
a	COAX® cartridge Pi12-3	AC
c	COAX® cartridge Pi12-2, non-return valve	AD
d	COAX® cartridge Pi12-3, non-return valve	AE

	2. Mounting / orientation	VGS code
	4x M4 & 1x plug G1/8" top, flush mount	00
f	M8 16 mm top	01
g	M8 16 mm right	02
e	M8 16 mm left	03
f	M8 27 mm top, profile kit	04
g	M8 27 mm right, profile kit	05
e	M8 27 mm left, profile kit	06
f	M6 22 mm screw top, profile kit	07
g	M6 22 mm screw right, profile kit	08
e	M6 22 mm screw left, profile kit	09
g	Ball joint VGS™3010 right	11
e	Ball joint VGS™3010 left	12
g	Lock-pin VGS™3010, right	13
e	Lock-pin VGS™3010, left	14
	Level Compensator LC30, 5x plug G1/8" kit	15

For more information about LC30, see separate data sheet.

3. Suction cup with fitting	VGS code
No suction cup	BA
FC100P 40° Shore A	BT
FC100P 60° Shore A	BU

Example	Ordering number
VGS™3010 FC100P – Pi12-3, M8 27 mm top including profile kit, FC100P 40° Shore A	VGS3010.AC.04.BT

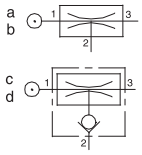

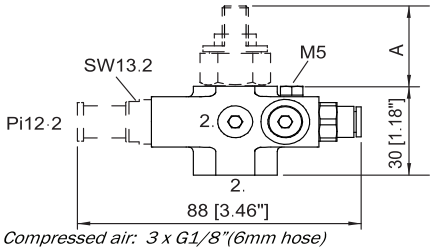

1. Compressed air: 3 x G1/8"(6mm hose)
2. Vacuum: 1 x G3/8" and 3 x G1/8"
3. Exhaust

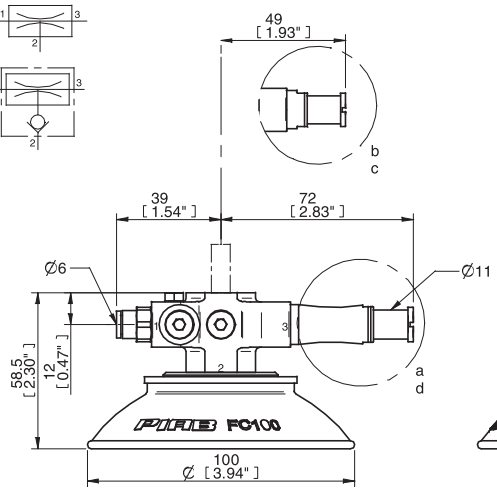

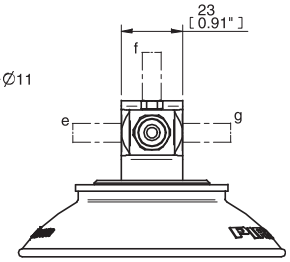

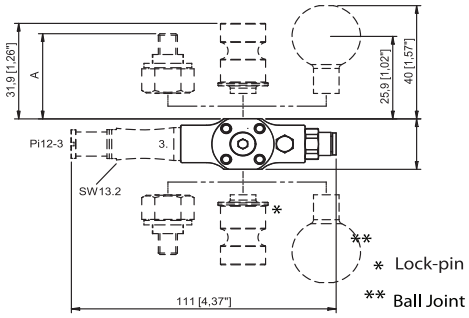

Mounting	A
M8 16	16 [0.63"]
M6 22	22 [0.87"]
M8 27	27 [1.06"]

VGS™3010 F75P

- Patented COAX® technology
- Suitable for all flat and rough surfaces.
- Good stability and little inherent movement due to the high friction of the rubber material, the suction cups can withstand high forces at rapid accelerations in horizontal directions, even on oily surfaces.
- Recommended when the lifting force is parallel to the surface of the object.
- Dual hardness allowing strength and stability in conjunction with softness and flexibility.
- DURAFLEX® material features the elasticity of rubber in combination with the wear resistance of polyurethane.
- The DURAFLEX® material is mark-free.
- The suction cups have a molded fitting with removable G3/8” male thread insert.

TECHNICAL DATA

Description	Unit	Value
Feed pressure, optimum	psi	45
Feed pressure, max.	psi	101.5
Noise level	dBA	65–74
Temperature range	°F	50-122
Weight	oz	4.51-5.29
Material		PA, NBR, AL, SS, PU, Brass

RECOMMENDED LOAD WITH BUILT-IN SAFETY FACTOR OF 2 AND RESPONSE TIME, 30°/60° SHORE

Feed pressure psi	Air consumption and compressor power, continuous operation	Material to be handled (see table below)	Recommended perpendicular load with safety factor 2 lbf	Recommended parallel (shear) load with safety factor 2 lbf	Response time to 15 -inHg with Pi12-2 s	Response time to 15 -inHg with Pi12-3 s
45	1 scfm, 155 W [0.21 hp]	Plywood	32.4	33.9	Response time varies based on quality	
45	1 scfm, 155 W [0.21 hp]	Corrugated	14.4	13.9	and porosity of handled material.	
45	1 scfm, 155 W [0.21 hp]	Dry steel	36.0	16.6	0.034	0.032
45	1 scfm, 155 W [0.21 hp]	Oily steel	31.9	7.42	0.034	0.032

RECOMMENDED LOAD WITH BUILT-IN SAFETY FACTOR OF 2 AND RESPONSE TIME, 60° SHORE

Feed pressure psi	Air consumption and compressor power, continuous operation	Material to be handled (see table below)	Recommended perpendicular load with safety factor 2 lbf	Recommended parallel (shear) load with safety factor 2 lbf	Response time to 15 -inHg with Pi12-2 s	Response time to 15 -inHg with Pi12-3 s
45	1 scfm, 155 W [0.21 hp]	Plywood	31.4	25.0	Response time varies based on quality	
45	1 scfm, 155 W [0.21 hp]	Corrugated	13.7	7.42	and porosity of handled material.	
45	1 scfm, 155 W [0.21 hp]	Dry steel	37.1	19.1	0.034	0.032
45	1 scfm, 155 W [0.21 hp]	Oily steel	36.6	7.42	0.034	0.032

Remark: The compressor power is calculated according to: 5.5 W consumed electric power per produced scfm compressed air, valid for a normal sized 7 bar [100 psi] compressor.

NOTE: The response times are not valid for Level Compensator LC30.

Material definition: Corrugated cardboard = B Flute 3 mm, 80 Gurley seconds.

ORDERING INFORMATION

	1. COAX® cartridge	VGS code
	No COAX® cartridge (slave unit with blind plug M14x1)	AA
b	COAX® cartridge Pi12-2	AB
a	COAX® cartridge Pi12-3	AC
c	COAX® cartridge Pi12-2, non-return valve	AD
d	COAX® cartridge Pi12-3, non-return valve	AE

	2. Mounting / orientation	VGS code
	4x M4 & 1x plug G1/8" top, flush mount	00
f	M8 16 mm top	01
g	M8 16 mm right	02
e	M8 16 mm left	03
f	M8 27 mm top, profile kit	04
g	M8 27 mm right, profile kit	05
e	M8 27 mm left, profile kit	06
f	M6 22 mm screw top, profile kit	07
g	M6 22 mm screw right, profile kit	08
e	M6 22 mm screw left, profile kit	09
g	Ball joint VGS™3010 right	11
e	Ball joint VGS™3010 left	12
g	Lock-pin VGS™3010, right	13
e	Lock-pin VGS™3010, left	14
	Level Compensator LC30, 5x plug G1/8" kit	15

For more information about LC30, see separate data sheet.

3. Suction cup with fitting	VGS code
No suction cup	BA
F75P 30°/60° Shore A	BL
F75P 60° Shore A	BM

Example	Ordering number
VGS™3010 F75P – Pi12-3, M8 27 mm top including profile kit, F75P 30/60° Shore A	VGS3010.AC.04.BL

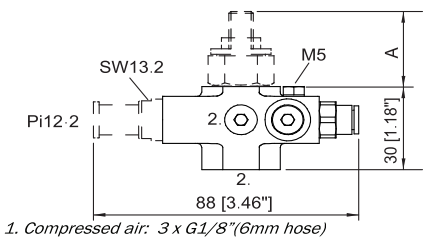

1. Compressed air: 3 x G1/8"(6mm hose)
2. Vacuum: 1 x G3/8" and 3 x G1/8"
3. Exhaust

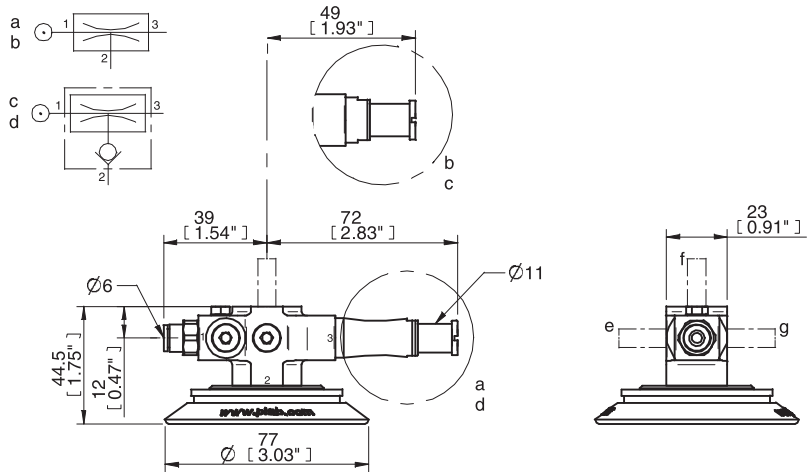

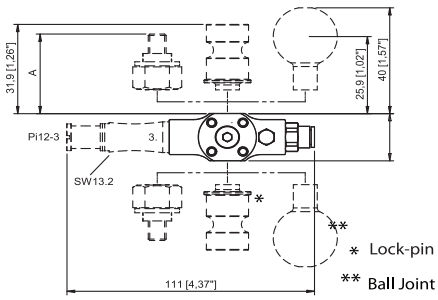

Mounting	A
M8 16	16 [0.63"]
M6 22	22 [0.87"]
M8 27	27 [1.06"]

VGS™3010 F110P

- Patented COAX® technology
- Suitable for all flat and rough surfaces.
- Good stability and little inherent movement due to the high friction of the rubber material, the suction cups can withstand high forces at rapid accelerations in horizontal directions, even on oily surfaces.
- Recommended when the lifting force is parallel to the surface of the object.
- Dual hardness allowing strength and stability in conjunction with softness and flexibility.
- DURAFLEX® material features the elasticity of rubber in combination with the wear resistance of polyurethane.
- The DURAFLEX® material is mark-free.
- The suction cups have a molded fitting with removable G3/8” male thread insert.

TECHNICAL DATA

Description	Unit	Value
Feed pressure, optimum	psi	45
Feed pressure, max.	psi	101.5
Noise level	dBA	65–74
Temperature range	°F	50-122
Weight	oz	7.41-8.18
Material		PA, NBR, AL, SS, PU, Brass

RECOMMENDED LOAD WITH BUILT-IN SAFETY FACTOR OF 2 AND RESPONSE TIME, 30°/60° SHORE

Feed pressure psi	Air consumption and compressor power, continuous operation	Material to be handled (see table below)	Recommended perpendicular load with safety factor 2 lbf	Recommended parallel (shear) load with safety factor 2 lbf	Response time to 15 -inHg with Pi12-2 s	Response time to 15 -inHg with Pi12-3 s
45	1 scfm, 155 W [0.21 hp]	Plywood	71.3	61.6	Response time varies based on quality	
45	1 scfm, 155 W [0.21 hp]	Corrugated	24.1	23.6	and porosity of handled material.	
45	1 scfm, 155 W [0.21 hp]	Dry steel	75.3	69.2	0.106	0.102
45	1 scfm, 155 W [0.21 hp]	Oily steel	68.3	21.4	0.106	0.102

RECOMMENDED LOAD WITH BUILT-IN SAFETY FACTOR OF 2 AND RESPONSE TIME, 60° SHORE

Feed pressure psi	Air consumption and compressor power, continuous operation	Material to be handled (see table below)	Recommended perpendicular load with safety factor 2 lbf	Recommended parallel (shear) load with safety factor 2 lbf	Response time to 15 -inHg with Pi12-2 s	Response time to 15 -inHg with Pi12-3 s
045	1 scfm, 155 W [0.21 hp]	Plywood	69.7	67.4	Response time varies based on quality	
45	1 scfm, 155 W [0.21 hp]	Corrugated	25.6	24.7	and porosity of handled material.	
45	1 scfm, 155 W [0.21 hp]	Dry steel	79.1	74.6	0.106	0.102
45	1 scfm, 155 W [0.21 hp]	Oily steel	68.3	36.2	0.106	0.102

Remark: The compressor power is calculated according to: 5.5 W consumed electric power per produced scfm compressed air, valid for a normal sized 7 bar [100 psi] compressor.

NOTE: The response times are not valid for Level Compensator LC30.

Material definition: Corrugated cardboard = B Flute 3 mm, 80 Gurley seconds.

ORDERING INFORMATION

	1. COAX® cartridge	VGS code
	No COAX® cartridge (slave unit with blind plug M14x1)	AA
b	COAX® cartridge Pi12-2	AB
a	COAX® cartridge Pi12-3	AC
c	COAX® cartridge Pi12-2, non-return valve	AD
d	COAX® cartridge Pi12-3, non-return valve	AE

	2. Mounting / orientation	VGS code
	4x M4 & 1x plug G1/8" top, flush mount	00
f	M8 16 mm top	01
g	M8 16 mm right	02
e	M8 16 mm left	03
f	M8 27 mm top, profile kit	04
g	M8 27 mm right, profile kit	05
e	M8 27 mm left, profile kit	06
f	M6 22 mm screw top, profile kit	07
g	M6 22 mm screw right, profile kit	08
e	M6 22 mm screw left, profile kit	09
g	Ball joint VGS™3010 right	11
e	Ball joint VGS™3010 left	12
g	Lock-pin VGS™3010, right	13
e	Lock-pin VGS™3010, left	14
	Level Compensator LC30, 5x plug G1/8" kit	15

For more information about LC30, see separate data sheet.

3. Suction cup with fitting	VGS code
No suction cup	BA
F110P 30°/60° Shore A	BN
F110P 60° Shore A	BO

Example	Ordering number
VGS™3010 F110P – Pi12-3, M8 27 mm top including profile kit, F110P 30/60° Shore A	VGS3010.AC.04.BN

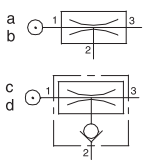

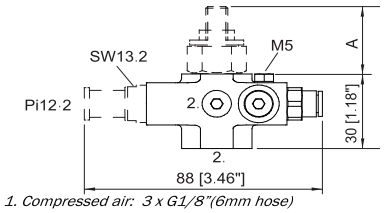

1. Compressed air: 3 x G1/8"(6mm hose)
2. Vacuum: 1 x G3/8" and 3 x G1/8"
3. Exhaust

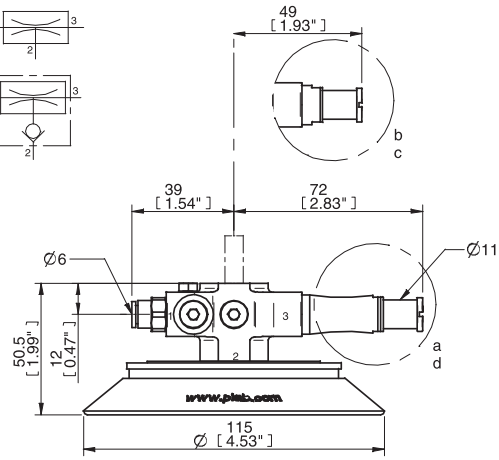

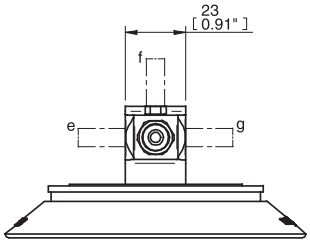

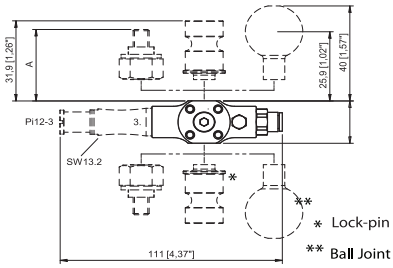

Mounting	A
M8 16	16 [0.63"]
M6 22	22 [0.87"]
M8 27	27 [1.06"]

VGS™3010 0B35X90P

- Patented COAX® technology
- Suitable for level adjustment. Can handle objects with height differences and varying shapes, for example embossed or corrugated plates.
- Lifting movement to separate small and thin objects.
- Dual hardness allowing strength and stability in conjunction with softness and flexibility.
- DURAFLEX® material features the elasticity of rubber in combination with the wear resistance of polyurethane.
- The DURAFLEX® material is mark-free.
- Separate G3/8" male suction cup fitting.

TECHNICAL DATA

Description	Unit	Value
Feed pressure, max.	psi	101.5
Noise level	dBA	65–74
Temperature range	°F	50-122
Weight	oz	5.33-12.5
Material		PA, NBR, AL, SS, PU, Brass

RECOMMENDED LOAD WITH BUILT IN SAFETY FACTOR OF 2 AND RESPONSE TIME, 30/60° SHORE

Feed pressure psi	Air consumption and compressor power, continuous operation	Material to be handled (see table below)	Recommended perpendicular load with safety factor 2 lbf	Recommended parallel (shear) load with safety factor 2 lbf	Response time to 15 -inHg with Pi12-2 s	Response time to 15 -inHg with Pi12-3 s
45	1 scfm, 155W [0.21 hp]	Plywood	15.1	19.3	Response time varies based on quality	
45	1 scfm, 155W [0.21 hp]	Corrugated	9.89	13.7	and porosity of handled material.	
45	1 scfm, 155W [0.21 hp]	Dry steel	17.5	23.8	0.064	0.061
45	1 scfm, 155W [0.21 hp]	Oily steel	11.5	6.74	0.064	0.061

RECOMMENDED LOAD WITH BUILT IN SAFETY FACTOR OF 2 AND RESPONSE TIME, 60° SHORE

Feed pressure psi	Air consumption and compressor power, continuous operation	Material to be handled (see table below)	Recommended perpendicular load with safety factor 2 lbf	Recommended parallel (shear) load with safety factor 2 lbf	Response time to 15 -inHg with Pi12-2 s	Response time to 15 -inHg with Pi12-3 s
45	1 scfm, 155W [0.21 hp]	Plywood	12.6	16.0	Response time varies based on quality	
45	1 scfm, 155W [0.21 hp]	Corrugated	8.77	11.7	and porosity of handled material.	
45	1 scfm, 155W [0.21 hp]	Dry steel	17.5	23.8	0.064	0.061
45	1 scfm, 155W [0.21 hp]	Oily steel	14.2	8.77	0.064	0.061

Remark: The compressor power is calculated according to: 5.5 W consumed electric power per produced scfm compressed air, valid for a normal sized 7 bar [100 psi] compressor.

NOTE: The response times are not valid for Level Compensator LC30.

Material definition: Corrugated cardboard = B Flute 3 mm, 80 Gurley seconds.

ORDERING INFORMATION

	1. COAX® cartridge	VGS code
	No COAX® cartridge (slave unit with blind plug M14x1)	AA
b	COAX® cartridge Pi12-2	AB
a	COAX® cartridge Pi12-3	AC
c	COAX® cartridge Pi12-2, non-return valve	AD
d	COAX® cartridge Pi12-3, non-return valve	AE

	2. Mounting / orientation	VGS code
	4x M4 & 1x plug G1/8" top, flush mount	00
f	M8 16 mm top	01
g	M8 16 mm right	02
e	M8 16 mm left	03
f	M8 27 mm top, profile kit	04
g	M8 27 mm right, profile kit	05
e	M8 27 mm left, profile kit	06
f	M6 22 mm screw top, profile kit	07
g	M6 22 mm screw right, profile kit	08
e	M6 22 mm screw left, profile kit	09
g	Ball joint VGS™3010 right	11
e	Ball joint VGS™3010 left	12
g	Lock-pin VGS™3010, right	13
e	Lock-pin VGS™3010, left	14
	Level Compensator LC30, 5x plug G1/8" kit	15

For more information about LC30, see separate data sheet.

3. Suction cups with fitting	VGS code
No suction cup	BA
OB35X90P PU30°/60° Shore A	CA
OB35X90P PU60° Shore A	CB

Example	Ordering number
VGS™3010 OB35x90P – Pi12-3, M8 27 mm top including profile kit, OB35x90P 30/60° Shore A	VGS3010 AC 04 CA

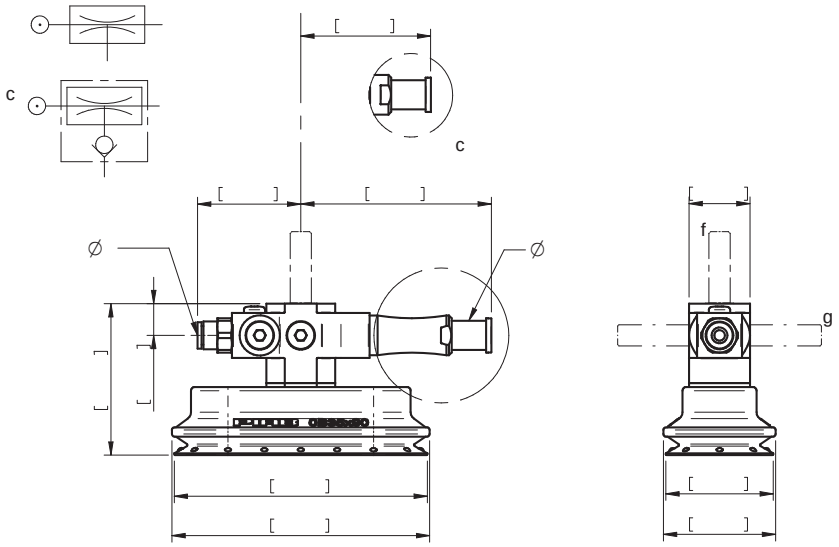

VGS™3010 0B50X140P

- Patented COAX® technology
- Suitable for level adjustment. Can handle objects with height differences and varying shapes, for example embossed or corrugated plates.
- Lifting movement to separate small and thin objects.
- Dual hardness allowing strength and stability in conjunction with softness and flexibility.
- DURAFLEX® material features the elasticity of rubber in combination with the wear resistance of polyurethane.
- The DURAFLEX® material is mark-free.
- Separate G3/8" male suction cup fitting.

TECHNICAL DATA

Description	Unit	Value
Feed pressure, max.	psi	101.5
Noise level	dBA	65–74
Temperature range	°F	50-122
Weight	oz	8.32-15.5
Material		PA, NBR, AL, SS, PU, Brass

RECOMMENDED LOAD WITH BUILT IN SAFETY FACTOR OF 2 AND RESPONSE TIME, 30°/60° SHORE

Feed pressure psi	Air consumption and compressor power, continuous operation	Material to be handled (see table below)	Recommended perpendicular load with safety factor 2 lbf	Recommended parallel (shear) load with safety factor 2 lbf	Response time to 15 -inHg with Pi12-2 s	Response time to 15 -inHg with Pi12-3 s
45	1 scfm, 155W [0.21 hp]	Plywood	33.7	39.3	Response time varies based on quality	
45	1 scfm, 155W [0.21 hp]	Corrugated	15.1	18.7	and porosity of handled material.	
45	1 scfm, 155W [0.21 hp]	Dry steel	40.9	38.9	0.168	0.162
45	1 scfm, 155W [0.21 hp]	Oily steel	34.4	38.0	0.168	0.162

RECOMMENDED LOAD WITH BUILT IN SAFETY FACTOR OF 2 AND RESPONSE TIME, 60° SHORE

Feed pressure psi	Air consumption and compressor power, continuous operation	Material to be handled (see table below)	Recommended perpendicular load with safety factor 2 lbf	Recommended parallel (shear) load with safety factor 2 lbf	Response time to 15 -inHg with Pi12-2 s	Response time to 15 -inHg with Pi12-3 s
45	1 scfm, 155W [0.21 hp]	Plywood	31.7	37.8	Response time varies based on quality	
45	1 scfm, 155W [0.21 hp]	Corrugated	12.6	23.2	and porosity of handled material.	
45	1 scfm, 155W [0.21 hp]	Dry steel	41.1	44.1	0.168	0.162
45	1 scfm, 155W [0.21 hp]	Oily steel	40.9	30.6	0.168	0.162

Remark: The compressor power is calculated according to: 5.5 W consumed electric power per produced scfm compressed air, valid for a normal sized 7 bar [100 psi] compressor.

NOTE: The response times are not valid for Level Compensator LC30.

Material definition: Corrugated cardboard = B Flute 3 mm, 80 Gurley seconds.

ORDERING INFORMATION

	1. COAX® cartridge	VGS code
	No COAX® cartridge (slave unit with blind plug M14x1)	AA
b	COAX® cartridge Pi12-2	AB
a	COAX® cartridge Pi12-3	AC
c	COAX® cartridge Pi12-2, non-return valve	AD
d	COAX® cartridge Pi12-3, non-return valve	AE

	2. Mounting / orientation	VGS code
	4x M4 & 1x plug G1/8" top, flush mount	00
f	M8 16 mm top	01
g	M8 16 mm right	02
e	M8 16 mm left	03
f	M8 27 mm top, profile kit	04
g	M8 27 mm right, profile kit	05
e	M8 27 mm left, profile kit	06
f	M6 22 mm screw top, profile kit	07
g	M6 22 mm screw right, profile kit	08
e	M6 22 mm screw left, profile kit	09
g	Ball joint VGS™3010 right	11
e	Ball joint VGS™3010 left	12
g	Lock-pin VGS™3010, right	13
e	Lock-pin VGS™3010, left	14
	Level Compensator LC30, 5x plug G1/8" kit	15

For more information about LC30, see separate data sheet.

3. Suction cups with fitting	VGS code
No suction cup	BA
OB50X140P PU30°/60° Shore A	CC
OB50X140P PU60° Shore A	CD

Example	Ordering number
VGS™3010 OB50x140P – Pi12-3, M8 27 mm top including profile kit, OB50x140P 30/60° Shore A	VGS3010 AC 04 CC

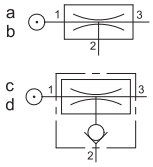

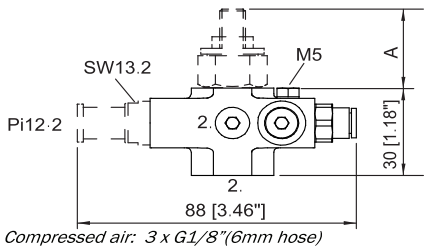

1. Compressed air: 3 x G1/8"(6mm hose)
2. Vacuum: 1 x G3/8" and 3 x G1/8"
3. Exhaust

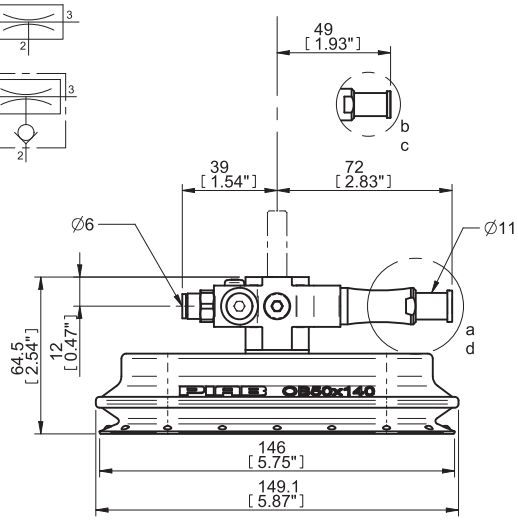

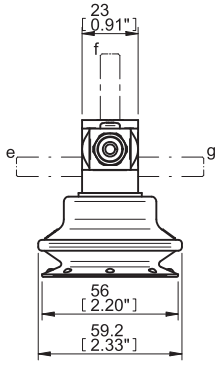

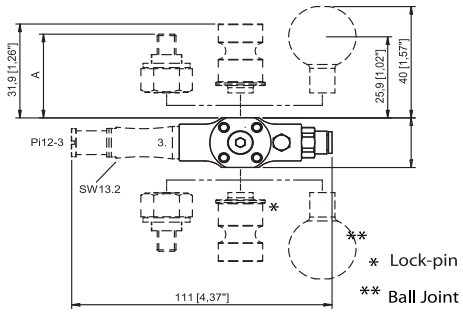

Mounting	A
M8 16	16 [0.63"]
M6 22	22 [0.87"]
M8 27	27 [1.06"]

VGS™3010 OB65X170P

- Patented COAX® technology
- Suitable for level adjustment. Can handle objects with height differences and varying shapes, for example embossed or corrugated plates.
- Lifting movement to separate small and thin objects.
- Dual hardness allowing strength and stability in conjunction with softness and flexibility.
- DURAFLEX® material features the elasticity of rubber in combination with the wear resistance of polyurethane.
- The DURAFLEX® material is mark-free.
- Separate G3/8" male suction cup fitting.

Description	Unit	Value
Feed pressure, max.	psi	101.5
Noise level	dBA	65–74
Temperature range	°F	50-122
Weight	oz	12.2-19.4
Material		PA, NBR, AL, SS, PU, Brass

RECOMMENDED LOAD WITH BUILT IN SAFETY FACTOR OF 2 AND RESPONSE TIME, 30°/60° SHORE

Feed pressure psi	Air consumption and compressor power, continuous operation	Material to be handled (see table below)	Recommended perpendicular load with safety factor 2 lbf	Recommended parallel (shear) load with safety factor 2 lbf	Response time to 15 -inHg with Pi12-2 s	Response time to 15 -inHg with Pi12-3 s
45	1 scfm, 155W [0.21 hp]	Plywood	51.7	59.8	Response time varies based on quality	
45	1 scfm, 155W [0.21 hp]	Corrugated	17.8	22.5	and porosity of handled material.	
45	1 scfm, 155W [0.21 hp]	Dry steel	59.6	58.2	0.310	0.298
45	1 scfm, 155W [0.21 hp]	Oily steel	53.7	32.8	0.310	0.298

RECOMMENDED LOAD WITH BUILT IN SAFETY FACTOR OF 2 AND RESPONSE TIME, 60° SHORE

Feed pressure psi	Air consumption and compressor power, continuous operation	Material to be handled (see table below)	Recommended perpendicular load with safety factor 2 lbf	Recommended parallel (shear) load with safety factor 2 lbf	Response time to 15 -inHg with Pi12-2 s	Response time to 15 -inHg with Pi12-3 s
45	1 scfm, 155W [0.21 hp]	Plywood	40.5	43.8	Response time varies based on quality	
45	1 scfm, 155W [0.21 hp]	Corrugated	17.5	29.2	and porosity of handled material.	
45	1 scfm, 155W [0.21 hp]	Dry steel	61.1	67.4	0.310	0.289
45	1 scfm, 155W [0.21 hp]	Oily steel	58.5	45.0	0.310	0.289

Remark: The compressor power is calculated according to: 5.5 W consumed electric power per produced scfm compressed air, valid for a normal sized 7 bar [100 psi] compressor.

NOTE: The response times are not valid for Level Compensator LC30.

Material definition: Corrugated cardboard = B Flute 3 mm, 80 Gurley seconds.

ORDERING INFORMATION

	1. COAX® cartridge	VGS code
	No COAX® cartridge (slave unit with blind plug M14x1)	AA
b	COAX® cartridge Pi12-2	AB
a	COAX® cartridge Pi12-3	AC
c	COAX® cartridge Pi12-2, non-return valve	AD
d	COAX® cartridge Pi12-3, non-return valve	AE

	2. Mounting / orientation	VGS code
	4x M4 & 1x plug G1/8" top, flush mount	00
f	M8 16 mm top	01
g	M8 16 mm right	02
e	M8 16 mm left	03
f	M8 27 mm top, profile kit	04
g	M8 27 mm right, profile kit	05
e	M8 27 mm left, profile kit	06
f	M6 22 mm screw top, profile kit	07
g	M6 22 mm screw right, profile kit	08
e	M6 22 mm screw left, profile kit	09
g	Ball joint VGS™3010 right	11
e	Ball joint VGS™3010 left	12
g	Lock-pin VGS™3010, right	13
e	Lock-pin VGS™3010, left	14
	Level Compensator LC30, 5x plug G1/8" kit	15

For more information about LC30, see separate data sheet.

3. Suction cups with fitting	VGS code
No suction cup	BA
OB65X170P PU30°/60° Shore A	CE
OB65X170P PU60° Shore A	CF

Example	Ordering number
VGS™3010 OB65x170P – Pi12-3, M8 27 mm top including profile kit, OB65x170P 30/60° Shore A	VGS3010 AC 04 CE

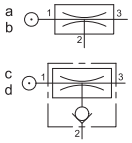

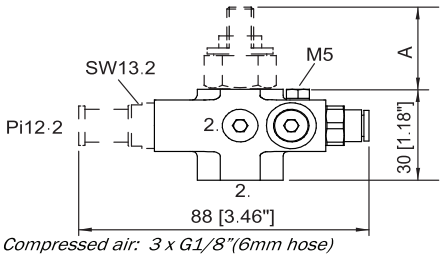

1. Compressed air: 3 x G1/8"(6mm hose)
2. Vacuum: 1 x G3/8" and 3 x G1/8"
3. Exhaust

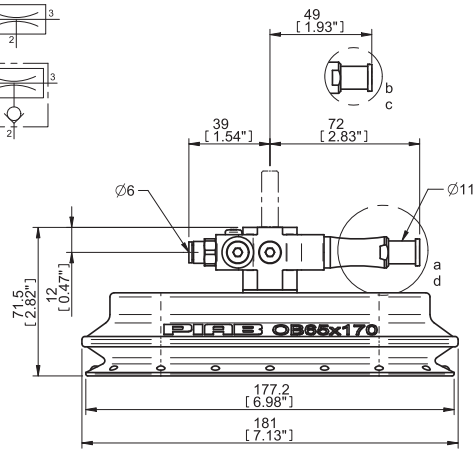

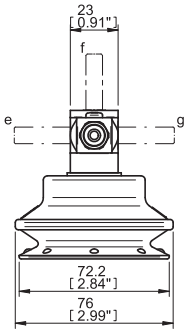

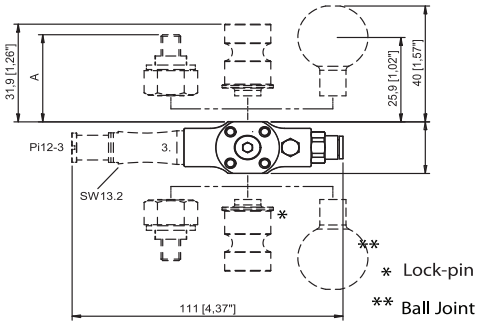

Mounting	A
M8 16	16 [0.63"]
M6 22	22 [0.87"]
M8 27	27 [1.06"]

VGS™3010 0F25X70P

- Patented COAX® technology
- Suitable for all flat and rough surfaces.
- Fair stability and little inherent movement.
- Recommended when the lifting force is parallel to the surface of the object.
- Cleats prevent thin, sensitive objects from being deformed and give extra friction when the lifting force is parallel to the surface of the object.
- DURAFLEX® material features the elasticity of rubber in combination with the wear resistance of polyurethane.
- The DURAFLEX® material is mark-free.
- Molded G3/8" male suction cup fitting.

TECHNICAL DATA

Description	Unit	Value
Feed pressure, max.	psi	101.5
Noise level	dBA	65–74
Temperature range	°F	50-122
Weight	oz	3.70-10.9
Material		PA, NBR, AL, SS, PU, Brass

RECOMMENDED LOAD WITH BUILT IN SAFETY FACTOR OF 2 AND RESPONSE TIME, 40° SHORE

Feed pressure psi	Air consumption and compressor power, continuous operation	Material to be handled (see table below)	Recommended perpendicular load with safety factor 2 lbf	Recommended parallel (shear) load with safety factor 2 lbf	Response time to 15 -inHg with Pi12-2 s	Response time to 15 -inHg with Pi12-3 s
45	1 scfm, 155W [0.21 hp]	Plywood	10.3	10.0	Response time varies based on quality	
45	1 scfm, 155W [0.21 hp]	Corrugated	7.98	8.32	and porosity of handled material.	
45	1 scfm, 155W [0.21 hp]	Dry steel	12.1	11.8	0.010	0.010
45	1 scfm, 155W [0.21 hp]	Oily steel	11.2	6.07	0.011	0.010

RECOMMENDED LOAD WITH BUILT IN SAFETY FACTOR OF 2 AND RESPONSE TIME, 60° SHORE

Feed pressure psi	Air consumption and compressor power, continuous operation	Material to be handled (see table below)	Recommended perpendicular load with safety factor 2 lbf	Recommended parallel (shear) load with safety factor 2 lbf	Response time to 15 -inHg with Pi12-2 s	Response time to 15 -inHg with Pi12-3 s
45	1 scfm, 155W [0.21 hp]	Plywood	9.89	10.9	Response time varies based on quality	
45	1 scfm, 155W [0.21 hp]	Corrugated	7.98	8.43	and porosity of handled material.	
45	1 scfm, 155W [0.21 hp]	Dry steel	13.3	18.2	0.011	0.010
45	1 scfm, 155W [0.21 hp]	Oily steel	11.8	6.41	0.011	0.010

Remark: The compressor power is calculated according to: 5.5 W consumed electric power per produced scfm compressed air, valid for a normal sized 7 bar [100 psi] compressor.

NOTE: The response times are not valid for Level Compensator LC30.

Material definition: Corrugated cardboard = B Flute 3 mm, 80 Gurley seconds.

ORDERING INFORMATION

	1. COAX® cartridge	VGS code
	No COAX® cartridge (slave unit with blind plug M14x1)	AA
b	COAX® cartridge Pi12-2	AB
a	COAX® cartridge Pi12-3	AC
c	COAX® cartridge Pi12-2, non-return valve	AD
d	COAX® cartridge Pi12-3, non-return valve	AE

	2. Mounting / orientation	VGS code
	4x M4 & 1x plug G1/8" top, flush mount	00
f	M8 16 mm top	01
g	M8 16 mm right	02
e	M8 16 mm left	03
f	M8 27 mm top, profile kit	04
g	M8 27 mm right, profile kit	05
e	M8 27 mm left, profile kit	06
f	M6 22 mm screw top, profile kit	07
g	M6 22 mm screw right, profile kit	08
e	M6 22 mm screw left, profile kit	09
g	Ball joint VGS™3010 right	11
e	Ball joint VGS™3010 left	12
g	Lock-pin VGS™3010, right	13
e	Lock-pin VGS™3010, left	14
	Level Compensator LC30, 5x plug G1/8" kit	15

For more information about LC30, see separate data sheet.

3. Suction cups with fitting	VGS code
No suction cup	BA
OF25X70P PU40° Shore A	CG
OF25X70P PU60° Shore A	CH

Example	Ordering number
VGS™3010 OF25x70P – Pi12-3, M8 27 mm top including profile kit, OF25x70P 40° Shore A	VGS3010 AC 04 CG

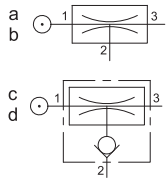

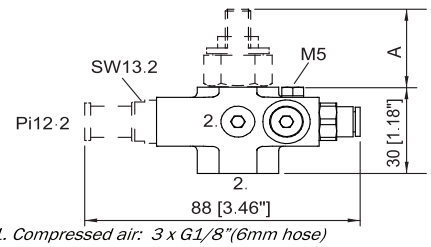

1. Compressed air: 3 x G1/8"(6mm hose)
2. Vacuum: 1 x G3/8" and 3 x G1/8"
3. Exhaust

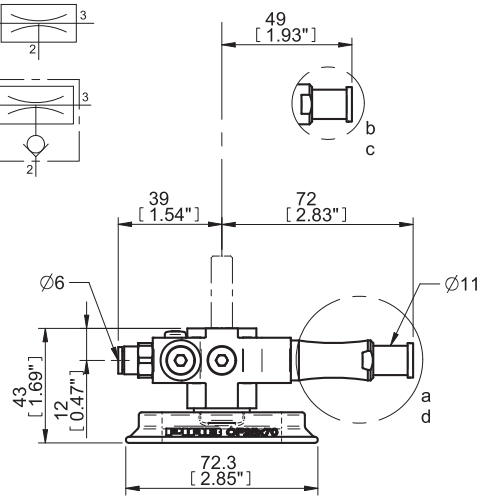

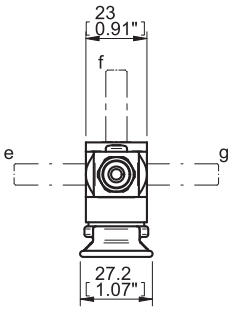

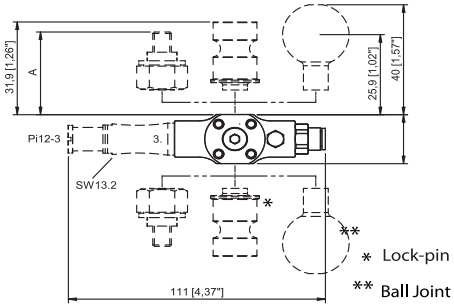

Mounting	A
M8 16	16 [0.63"]
M6 22	22 [0.87"]
M8 27	27 [1.06"]

VGS™3010 0F40X110P

- Patented COAX® technology
- Suitable for all flat and rough surfaces.
- Fair stability and little inherent movement.
- Recommended when the lifting force is parallel to the surface of the object.
- Cleats prevent thin, sensitive objects from being deformed and give extra friction when the lifting force is parallel to the surface of the object.
- DURAFLEX® material features the elasticity of rubber in combination with the wear resistance of polyurethane.
- The DURAFLEX® material is mark-free.
- Molded G3/8" male suction cup fitting.

TECHNICAL DATA

Description	Unit	Value
Feed pressure, max.	psi	101.5
Noise level	dBA	65–74
Temperature range	°F	50-122
Weight	oz	5.33-12.5
Material		PA, NBR, AL, SS, PU, Brass

RECOMMENDED LOAD WITH BUILT IN SAFETY FACTOR OF 2 AND RESPONSE TIME, 40° SHORE

Feed pressure psi	Air consumption and compressor power, continuous operation	Material to be handled (see table below)	Recommended perpendicular load with safety factor 2 lbf	Recommended parallel (shear) load with safety factor 2 lbf	Response time to 15 -inHg with Pi12-2 s	Response time to 15 -inHg with Pi12-3 s
45	1 scfm, 155W [0.21 hp]	Plywood	27.7	26.9	Response time varies based on quality	
45	1 scfm, 155W [0.21 hp]	Corrugated	13.9	11.4	and porosity of handled material.	
45	1 scfm, 155W [0.21 hp]	Dry steel	32.7	33.4	0.037	0.036
45	1 scfm, 155W [0.21 hp]	Oily steel	27.8	8.09	0.037	0.036

RECOMMENDED LOAD WITH BUILT IN SAFETY FACTOR OF 2 AND RESPONSE TIME, 60° SHORE

Feed pressure psi	Air consumption and compressor power, continuous operation	Material to be handled (see table below)	Recommended perpendicular load with safety factor 2 lbf	Recommended parallel (shear) load with safety factor 2 lbf	Response time to 15 -inHg with Pi12-2 s	Response time to 15 -inHg with Pi12-3 s
45	1 scfm, 155W [0.21 hp]	Plywood	29.1	29.6	Response time varies based on quality	
45	1 scfm, 155W [0.21 hp]	Corrugated	10.2	17.3	and porosity of handled material.	
45	1 scfm, 155W [0.21 hp]	Dry steel	34.1	46.2	0.037	0.036
45	1 scfm, 155W [0.21 hp]	Oily steel	31.4	13.2	0.037	0.036

Remark: The compressor power is calculated according to: 5.5 W consumed electric power per produced scfm compressed air, valid for a normal sized 7 bar [100 psi] compressor.

NOTE: The response times are not valid for Level Compensator LC30.

Material definition: Corrugated cardboard = B Flute 3 mm, 80 Gurley seconds.

ORDERING INFORMATION

	1. COAX® cartridge	VGS code
	No COAX® cartridge (slave unit with blind plug M14x1)	AA
b	COAX® cartridge Pi12-2	AB
a	COAX® cartridge Pi12-3	AC
c	COAX® cartridge Pi12-2, non-return valve	AD
d	COAX® cartridge Pi12-3, non-return valve	AE

	2. Mounting / orientation	VGS code
	4x M4 & 1x plug G1/8" top, flush mount	00
f	M8 16 mm top	01
g	M8 16 mm right	02
e	M8 16 mm left	03
f	M8 27 mm top, profile kit	04
g	M8 27 mm right, profile kit	05
e	M8 27 mm left, profile kit	06
f	M6 22 mm screw top, profile kit	07
g	M6 22 mm screw right, profile kit	08
e	M6 22 mm screw left, profile kit	09
g	Ball joint VGS™3010 right	11
e	Ball joint VGS™3010 left	12
g	Lock-pin VGS™3010, right	13
e	Lock-pin VGS™3010, left	14
	Level Compensator LC30, 5x plug G1/8" kit	15

For more information about LC30, see separate data sheet.

3. Suction cups with fitting	VGS code
No suction cup	BA
OF40X110P PU40° Shore A	CI
OF40X110P PU60° Shore A	CJ

Example	Ordering number
VGS™3010 OF40x110P – Pi12-3, M8 27 mm top including profile kit, OF40x110P 40° Shore A	VGS3010 AC 04 CI

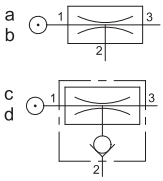

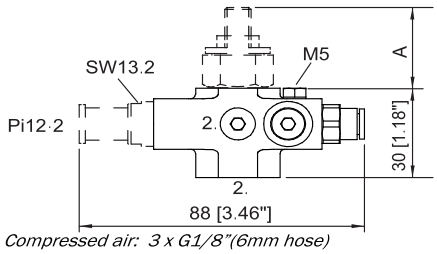

1. Compressed air: 3 x G1/8"(6mm hose)
2. Vacuum: 1 x G3/8" and 3 x G1/8"
3. Exhaust

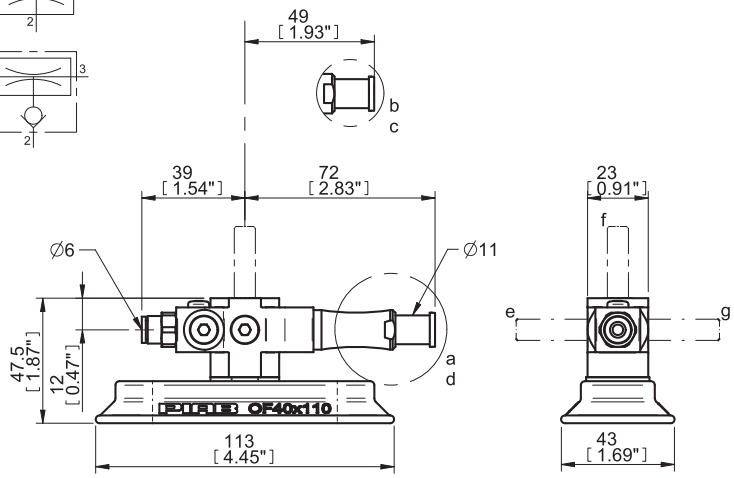

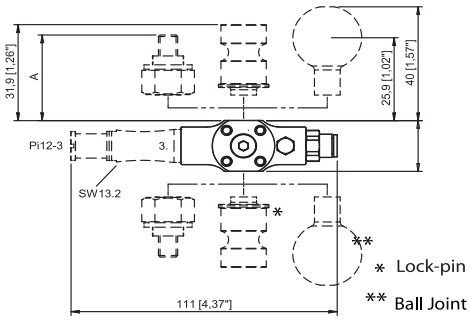

Mounting	A
M8 16	16 [0.63"]
M6 22	22 [0.87"]
M8 27	27 [1.06"]

VGS™3010 0F55X150P

- Patented COAX® technology
- Suitable for all flat and rough surfaces.
- Fair stability and little inherent movement.
- Recommended when the lifting force is parallel to the surface of the object.
- Cleats prevent thin, sensitive objects from being deformed and give extra friction when the lifting force is parallel to the surface of the object.
- DURAFLEX® material features the elasticity of rubber in combination with the wear resistance of polyurethane.
- The DURAFLEX® material is mark-free.
- Molded G3/8" male suction cup fitting.

TECHNICAL DATA

Description	Unit	Value
Feed pressure, max.	psi	101.5
Noise level	dBA	65–74
Temperature range	°F	50-122
Weight	oz	7.62-14.8
Material		PA, NBR, AL, SS, PU, Brass

RECOMMENDED LOAD WITH BUILT IN SAFETY FACTOR OF 2 AND RESPONSE TIME, 40° SHORE

Feed pressure psi	Air consumption and compressor power, continuous operation	Material to be handled (see table below)	Recommended perpendicular load with safety factor 2 lbf	Recommended parallel (shear) load with safety factor 2 lbf	Response time to 15 -inHg with Pi12-2 s	Response time to 15 -inHg with Pi12-3 s
45	1 scfm, 155W [0.21 hp]	Plywood	48.1	48.0	Response time varies based on quality	
45	1 scfm, 155W [0.21 hp]	Corrugated	19.7	26.0	and porosity of handled material.	
45	1 scfm, 155W [0.21 hp]	Dry steel	58.0	54.2	0.065	0.063
45	1 scfm, 155W [0.21 hp]	Oily steel	55.5	36.0	0.065	0.063

RECOMMENDED LOAD WITH BUILT IN SAFETY FACTOR OF 2 AND RESPONSE TIME, 60° SHORE

Feed pressure psi	Air consumption and compressor power, continuous operation	Material to be handled (see table below)	Recommended perpendicular load with safety factor 2 lbf	Recommended parallel (shear) load with safety factor 2 lbf	Response time to 15 -inHg with Pi12-2 s	Response time to 15 -inHg with Pi12-3 s
45	1 scfm, 155W [0.21 hp]	Plywood	46.8	52.0	Response time varies based on quality	
45	1 scfm, 155W [0.21 hp]	Corrugated	20.3	25.4	and porosity of handled material.	
45	1 scfm, 155W [0.21 hp]	Dry steel	62.7	53.5	0.065	0.063
45	1 scfm, 155W [0.21 hp]	Oily steel	60.7	39.5	0.065	0.063

Remark: The compressor power is calculated according to: 5.5 W consumed electric power per produced scfm compressed air, valid for a normal sized 7 bar [100 psi] compressor.

NOTE: The response times are not valid for Level Compensator LC30.

Material definition: Corrugated cardboard = B Flute 3 mm, 80 Gurley seconds.

ORDERING INFORMATION

	1. COAX® cartridge	VGS code
	No COAX® cartridge (slave unit with blind plug M14x1)	AA
b	COAX® cartridge Pi12-2	AB
a	COAX® cartridge Pi12-3	AC
c	COAX® cartridge Pi12-2, non-return valve	AD
d	COAX® cartridge Pi12-3, non-return valve	AE

	2. Mounting / orientation	VGS code
	4x M4 & 1x plug G1/8" top, flush mount	00
f	M8 16 mm top	01
g	M8 16 mm right	02
e	M8 16 mm left	03
f	M8 27 mm top, profile kit	04
g	M8 27 mm right, profile kit	05
e	M8 27 mm left, profile kit	06
f	M6 22 mm screw top, profile kit	07
g	M6 22 mm screw right, profile kit	08
e	M6 22 mm screw left, profile kit	09
g	Ball joint VGS™3010 right	11
e	Ball joint VGS™3010 left	12
g	Lock-pin VGS™3010, right	13
e	Lock-pin VGS™3010, left	14
	Level Compensator LC30, 5x plug G1/8" kit	15

For more information about LC30, see separate data sheet.

3. Suction cups with fitting	VGS code
No suction cup	BA
OF55X150P PU40° Shore A	CK
OF55X150P PU60° Shore A	CL

Example	Ordering number
VGS™3010 OF55x150P – Pi12-3, M8 27 mm top including profile kit, OF55x150P 40° Shore A	VGS3010 AC 04 CK

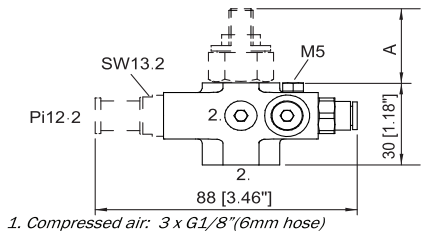

1. Compressed air: 3 x G1/8"(6mm hose)
2. Vacuum: 1 x G3/8" and 3 x G1/8"
3. Exhaust

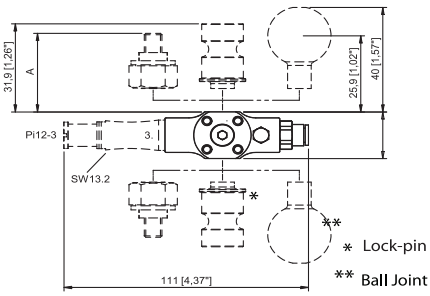

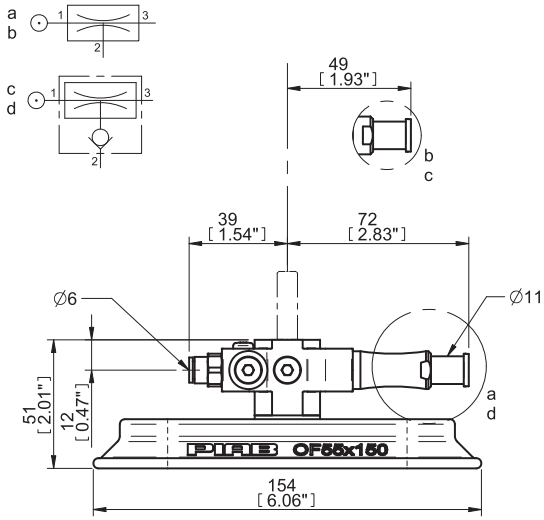

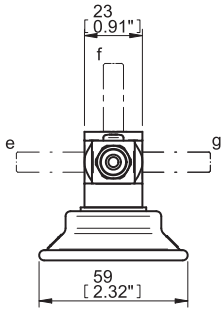

Mounting	A
M8 16	16 [0.63"]
M6 22	22 [0.87"]
M8 27	27 [1.06"]

VGS™3010 0F70X175P

- Patented COAX® technology
- Suitable for all flat and rough surfaces.
- Fair stability and little inherent movement.
- Recommended when the lifting force is parallel to the surface of the object.
- Cleats prevent thin, sensitive objects from being deformed and give extra friction when the lifting force is parallel to the surface of the object.
- DURAFLEX® material features the elasticity of rubber in combination with the wear resistance of polyurethane.
- The DURAFLEX® material is mark-free.
- Molded G3/8" male suction cup fitting.

TECHNICAL DATA

Description	Unit	Value
Feed pressure, max.	psi	101.5
Noise level	dBA	65–74
Temperature range	°F	50-122
Weight	oz	10.1-17.3
Material		PA, NBR, AL, SS, PU, Brass

RECOMMENDED LOAD WITH BUILT IN SAFETY FACTOR OF 2 AND RESPONSE TIME, 40° SHORE

Feed pressure psi	Air consumption and compressor power, continuous operation	Material to be handled (see table below)	Recommended perpendicular load with safety factor 2 lbf	Recommended parallel (shear) load with safety factor 2 lbf	Response time to 15 -inHg with Pi12-2 s	Response time to 15 -inHg with Pi12-3 s
45	1 scfm, 155W	Plywood	71.9	78.7	Response time varies based on quality	
45	1 scfm, 155W	Corrugated	26.4	28.1	and porosity of handled material.	
45	1 scfm, 155W	Dry steel	87.1	76.4	0.142	0.136
45	1 scfm, 155W	Oily steel	80.9	45.0	0.142	0.136

RECOMMENDED LOAD WITH BUILT IN SAFETY FACTOR OF 2 AND RESPONSE TIME, 60° SHORE

Feed pressure psi	Air consumption and compressor power, continuous operation	Material to be handled (see table below)	Recommended perpendicular load with safety factor 2 lbf	Recommended parallel (shear) load with safety factor 2 lbf	Response time to 15 -inHg with Pi12-2 s	Response time to 15 -inHg with Pi12-3 s
45	1 scfm, 155W	Plywood	71.3	64.1	Response time varies based on quality	
45	1 scfm, 155W	Corrugated	16.2	28.1	and porosity of handled material.	
45	1 scfm, 155W	Dry steel	97.8	88.2	0.142	0.136
45	1 scfm, 155W	Oily steel	91.0	56.8	0.142	0.136

Remark: The compressor power is calculated according to: 5.5 W consumed electric power per produced scfm compressed air, valid for a normal sized 7 bar [100 psi] compressor.

NOTE: The response times are not valid for Level Compensator LC30.

Material definition: Corrugated cardboard = B Flute 3 mm, 80 Gurley seconds.

ORDERING INFORMATION

	1. COAX® cartridge	VGS code
	No COAX® cartridge (slave unit with blind plug M14x1)	AA
b	COAX® cartridge Pi12-2	AB
a	COAX® cartridge Pi12-3	AC
c	COAX® cartridge Pi12-2, non-return valve	AD
d	COAX® cartridge Pi12-3, non-return valve	AE

	2. Mounting / orientation	VGS code
	4x M4 & 1x plug G1/8" top, flush mount	00
f	M8 16 mm top	01
g	M8 16 mm right	02
e	M8 16 mm left	03
f	M8 27 mm top, profile kit	04
g	M8 27 mm right, profile kit	05
e	M8 27 mm left, profile kit	06
f	M6 22 mm screw top, profile kit	07
g	M6 22 mm screw right, profile kit	08
e	M6 22 mm screw left, profile kit	09
g	Ball joint VGS™3010 right	11
e	Ball joint VGS™3010 left	12
g	Lock-pin VGS™3010, right	13
e	Lock-pin VGS™3010, left	14
	Level Compensator LC30, 5x plug G1/8" kit	15

For more information about LC30, see separate data sheet.

3. Suction cups with fitting	VGS code
No suction cup	BA
OF70X175P PU40° Shore A	CM
OF70X175P PU60° Shore A	CN

Example	Ordering number
VGS™3010 OF70x175P – Pi12-3, M8 27 mm top including profile kit, OF70x175P 40° Shore A	VGS3010 AC 04 CM

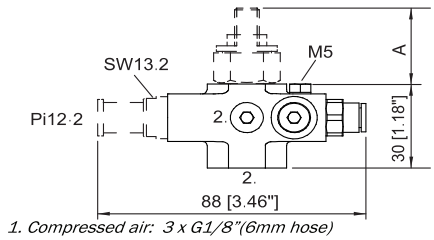

1. Compressed air: 3 x G1/8"(6mm hose)
2. Vacuum: 1 x G3/8" and 3 x G1/8"
3. Exhaust

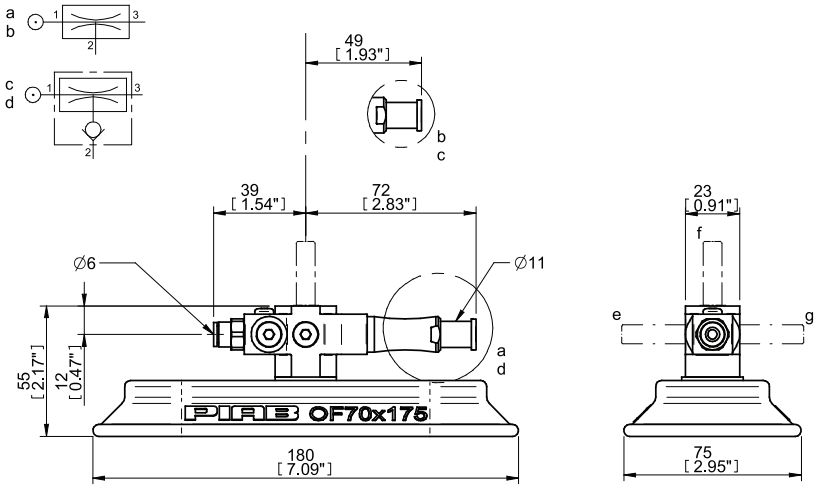

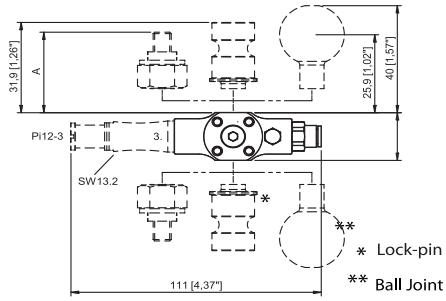

Mounting	A
M8 16	16 [0.63"]
M6 22	22 [0.87"]
M8 27	27 [1.06"]

VGS™3010 MOUNTING-KITS

- Fits standard robot end-of-arm tooling interfaces
- Easy attachment to standard extrusion and profile systems
- Flexible positioning
- Quick setup and change-over
- Durable and non-rotating installation

TECHNICAL DATA

Description	Unit	Value					
		01.06.915	01.06.927	01.06.949	01.08.488	01.08.731	01.08.734
Material		SS, NBR	SS, PA, NBR	Al, SS, Steel, NBR	Al, SS, Steel, NBR	AL, SS, NBR	SS, NBR
Weight	oz	0.85	0.85	1.27	0.78	1.62	2.47

ORDERING INFORMATION

	Description	Part No.
A	4x M4 & 1x plug G1/8" top, flush mount	01.06.915
B	M8 16 mm	01.06.927
C	M8 27 mm, profile kit	01.06.949
D	M6 22 mm screw, profile kit	01.08.488
E	Ball joint VGS™3010	01.08.731
F	Lock-pin VGS™3010	01.08.734

B–F 4x plug G1/8" included.

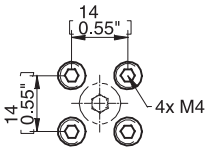

A

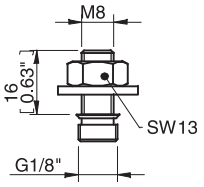

B

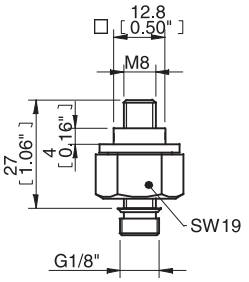

C

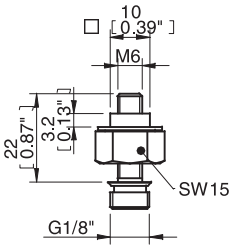

D

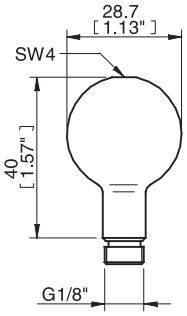

E

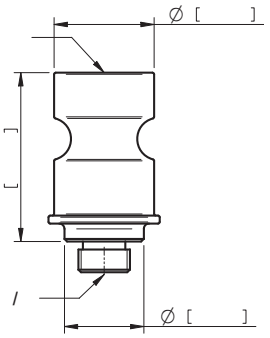

F

VGS™3010

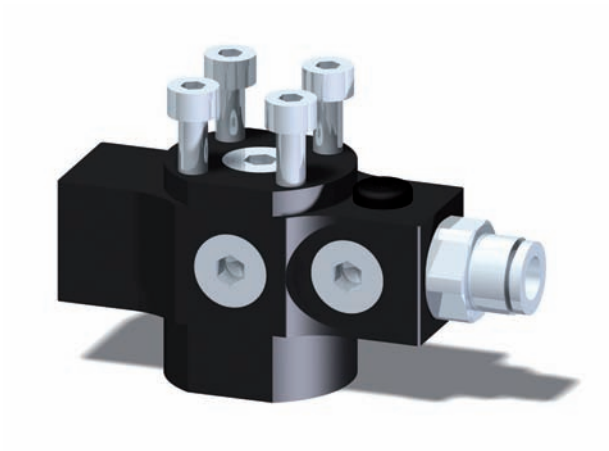

▶ When the need for vacuum flow is small, for example in air-tight systems with small cups, a VGS™3010 with a vacuum cartridge could provide one or a few other "slave units".

TECHNICAL DATA

Description	Unit	Value
Temperature range	°F	14-122
Weight	oz	2.33-4.13
Material		PA, NBR, AL, SS

ORDERING INFORMATION

1. COAX® cartridge	VGS™ code
No COAX® cartridge (slave unit with blind plug M14x1)	AA

	2. Mounting / orientation	VGS code
	4x M4 & 1x plug G1/8" top, flush mount	00
f	M8 16 mm top	01
g	M8 16 mm right	02
e	M8 16 mm left	03
f	M8 27 mm top, profile kit	04
g	M8 27 mm right, profile kit	05
e	M8 27 mm left, profile kit	06
f	M6 22 mm screw top, profile kit	07
g	M6 22 mm screw right, profile kit	08
e	M6 22 mm screw left, profile kit	09
g	Ball joint VGS™3010 right	11
e	Ball joint VGS™3010 left	12
g	Lock-pin VGS™3010, right	13
e	Lock-pin VGS™3010, left	14
	Level Compensator LC30, 5x plug G1/8" kit	15

For more information about LC30, see separate data sheet.

3. Suction cup with fitting	VGS code
No suction cup	BA

Example	Ordering number
VGS™3010 – slave unit, 4xM4 & 1x plug G1/8" top, flush mount	VGS3010.AA.00.BA

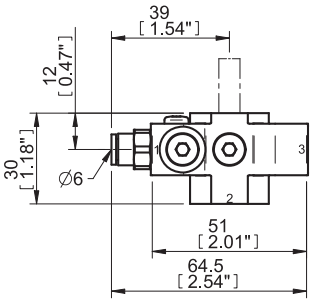

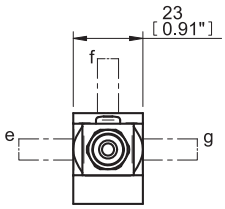

AQR — ATMOSPHERIC QUICK RELEASE

- Equalizes pressure within the vacuum gripper system to provide fast release of product
- Consumes no additional compressed air
- ON/OFF activated simultaneously with the Vauum Gripper System (VGS™)
- Simple installation to the vacuum chamber of the VGS™ pump
- No additional controls required — use single 3/2 control valve for VGS™ and AQR

TECHNICAL DATA

Description	Unit	Value
Feed pressure	psi	44-101.5
Temperature range	°F	50-122
Weight	oz	0.71
Atmospheric flow, average	scfm	0.12
Material		CuZn, PUR, NBR
Recommended max. distance between AQR and control valve for optimal performance	ft	5.0

ORDERING INFORMATION

Description	Part No.
Atmospheric quick release valve - AQR	01.11.236

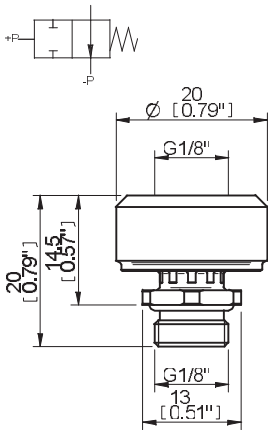

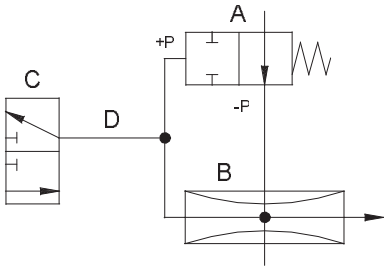

A=AQR, B=Vacuum pump, C=Control valve, D=Rec. max. 5.0 ft

BLOW-OFF CHECK VALVE G1/8"

- Prevents vacuum from being pulled through the blow-off lines, which means faster response time and completely independent vacuum units.
- Reliable quick-release function even in larger systems with several units, due to the very low feed pressure required to break away for blow-off.
- Suitable in applications where cleaning of the suction cup filters or cooling of the object to be picked is important.
- Simple installation to any G1/8” vacuum port.

TECHNICAL DATA

Description	Unit	Value
Feed pressure, recommended range	psi	44-101.5
Flow rate at 44-105 psi	scfm	3.18-5.93
Feed pressure, minimum to breakaway for blow-off	psi	14.5
Temperature range	°F	14-176
Weight	oz	0.44
Material		AL, CuZn, SS, NBR

ORDERING INFORMATION

Description	Part No.
Blow-off Check valve G1/8"	01.15.314

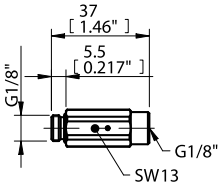

VGS™3010 LC30

- Patented COAX® technology
- Tailor made for the Vacuum Gripper System, VGS™, but can also be used together with other PIAB products.
- Developed for use with standard profile systems.
- Easy installation with the option of fine adjustments and positioning of the suction cup.
- Non-rotational for use with, for example, oval suction cups. Can easily be made rotational.
- Quiet and reliable level compensation with load protection and shock absorption.

TECHNICAL DATA

Description	Unit	Value
Feed pressure, max.	psi	101.5
Noise level	dBA	65–74
Temperature range	°F	50-122
Weight range	oz	10.5-20.4
Material		PA, NBR, AL, SS, PU, Brass
Spring force	lbf	1.12-9.44
Stroke	in	1.18
Volume LC30, internal	in^3	0.31
Maximum load, vertical	lbf	157
Adjustable in height	in	0.47
Adjustable in rotational direction	°	0–360

ORDERING INFORMATION

	1. COAX® cartridge	VGS code
	No COAX® cartridge (slave unit with blind plug M14x1)	AA
b	COAX® cartridge Pi12-2	AB
a	COAX® cartridge Pi12-3	AC
c	COAX® cartridge Pi12-2, non-return valve	AD
d	COAX® cartridge Pi12-3, non-return valve	AE

2. LC30	VGS code
Level compensator LC30	15

LC 30 is delivered with two MC6S M6x45 fzb screws.

3. Suction cups with fitting	Y (in)	X (in)	VGS Code
No suction cup	4.37	—	BA
B75P 30°/60° Shore A	5.90	Ø3.11	BB
B75P 60° Shore A	5.90	Ø3.11	BC
BF80P 30°/50° Shore A	5.81	Ø3.31	BD
BF80P 60° Shore A	5.81	Ø3.31	BE
BX35P 30°/60° Shore A	5.66	Ø1.46	BF
BX35P 60° Shore A	5.66	Ø1.46	BG
BX52P 30°/60° Shore A	6.14	Ø2.09	BH
BX52P 60° Shore A	6.14	Ø2.09	BI
BX75P 30°/60° Shore A	6.41	Ø3.05	BJ
BX75P 60° Shore A	6.41	Ø3.05	BK
F75P 30°/60° Shore A	4.94	Ø3.03	BL
F75P 60° Shore A	4.94	Ø3.03	BM
F110P 30°/60° Shore A	5.18	Ø4.53	BN
F110P 60° Shore A	5.18	Ø4.53	BO
FC50P 40° Shore A	5.30	Ø1.97	BP
FC50P 60° Shore A	5.30	Ø1.97	BQ
FC75P 40° Shore A	5.31	Ø2.95	BR
FC75P 60° Shore A	5.31	Ø2.95	BS
FC100P 40° Shore A	5.49	Ø3.94	BT
FC100P 60° Shore A	5.49	Ø3.94	BU
OB35X90P PU30°/60° Shore A	5.44	1.67x3.83	CA
OB35X90P PU60° Shore A	5.44	1.67x3.83	CB
OB50X140P PU30°/60° Shore A	5.73	2.33x5.87	CC
OB50X140P PU60° Shore A	5.73	2.33x5.87	CD
OB65X170P PU30°/60° Shore A	6.00	2.99x7.13	CE
OB65X170P PU60° Shore A	6.00	2.99x7.13	CF
OF25X70P PU40° Shore A	4.88	1.07x2.85	CG
OF25X70P PU60° Shore A	4.88	1.07x2.85	CH
OF40X110P PU40° Shore A	5.06	1.69x4.45	CI
OF40X110P PU60° Shore A	5.06	1.69x4.45	CJ
OF55X150P PU40° Shore A	5.20	2.32x6.06	CK
OF55X150P PU60° Shore A	5.20	2.32x6.06	CL
OF70X175P PU40° Shore A	5.35	2.95x7.09	CM
OF70X175P PU60° Shore A	5.35	2.95x7.09	CN
BF110P 30°/60° Shore A	6.46	Ø4.53	CO
BF110P 60° Shore A	6.46	Ø4.53	CP
BX110P 30°/60° Shore A	7.29	Ø4.48	CQ
BX110P 60° Shore A	7.29	Ø4.48	CR

Example	Ordering number
VGS™3010 LC30 – Pi12-3, Level Compensator LC30, B75P 30/60° Shore A	VGS3010 AC 15 BB

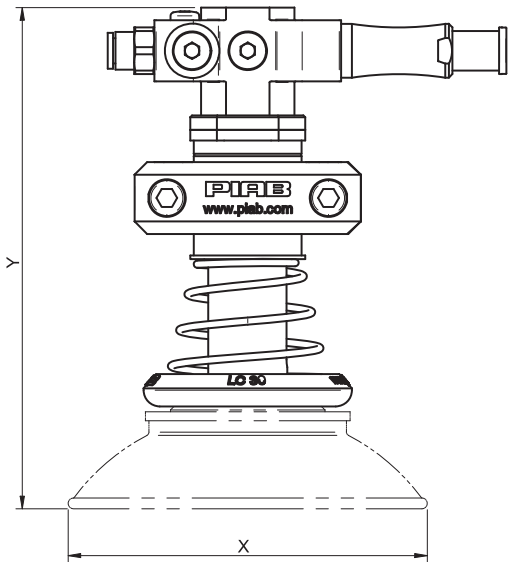

VGS™5010 BF110P

- Patented COAX® technology.
- The suction cups are specially designed for handling larger parts, such as car body sheets.
- The soft, flexible lip makes the cup suitable for curved or uneven surfaces and the dual hardness version, PU30/60, is also recommended for rough or rugged surfaces to prevent micro-leakage, which can occur on plastic or composite work pieces.
- Available with a two or three-stage COAX® cartridge MIDI. Choose an Si cartridge for extra vacuum flow or a Pi cartridge for high performance at low feed pressure.
- The three-stage cartridge will give extra high initial vacuum flow, suitable in high speed applications.
- Easy installation and flexible positioning with several mounting options.

TECHNICAL DATA

Description	Unit	Value
Feed pressure, optimum	psi	44 (Pi), 87 (Si)
Feed pressure, max.	psi	101.5
Noise level	dBA	73–83
Temperature range	°F	50-122
Weight	oz	13.2-19.3
Material		Al, SS, NBR, PA, PP, PU

RECOMMENDED LOAD WITH BUILT-IN SAFETY FACTOR OF 2 AND RESPONSE TIME, 30°/60° SHORE

COAX® cartridge	Feed pressure psi	Air consumption and compressor power, continuous operation	Material to be handled (see table below)	Recommended perpendicular load with safety factor 2 lbf	Recommended parallel (shear) load with safety factor 2 lbf	Response time to 15-inHg with Pi48-2 s	Response time to 15-inHg with Pi48-3 s
Si	87	3.71 scfm, 577W [0.77 hp]	Plywood	21.1	18.2	Response time varies based on quality and porosity of handled material	
Si	87	3.71 scfm, 577W [0.77 hp]	Corrugated	22.3	18.2		
Pi	46	4.24 scfm, 660W [0.88 hp]	Dry steel	23.8	25.9	0.048	0.046
Pi	46	4.24 scfm, 660W [0.88 hp]	Oily steel	23.6	11.5	0.048	0.046

RECOMMENDED LOAD WITH BUILT-IN SAFETY FACTOR OF 2 AND RESPONSE TIME, 60° SHORE

COAX® cartridge	Feed pressure psi	Air consumption and compressor power, continuous operation	Material to be handled (see table below)	Recommended perpendicular load with safety factor 2 lbf	Recommended parallel (shear) load with safety factor 2 lbf	Response time to 15-inHg with Pi48-2 s	Response time to 15-inHg with Pi48-3 s
Si	87	3.71 scfm, 577W [0.77 hp]	Plywood	23.8	18.9	Response time varies based on quality and porosity of handled material	
Si	87	3.71 scfm, 577W [0.77 hp]	Corrugated	24.5	18.0		
Pi	46	4.24 scfm, 660W [0.88 hp]	Dry steel	28.8	31.0	0.048	0.046
Pi	46	4.24 scfm, 660W [0.88 hp]	Oily steel	28.8	12.4	0.048	0.046

Remark: The compressor power is calculated according to: 155 W consumed electric power per produced scfm compressed air, valid for a normally sized 7 [100 psi] bar compressor.

Material definition: Corrugated cardboard = B Flute 3 mm, 80 Gurley seconds.

ORDERING INFORMATION

	1. COAX® cartridge	VGS code
	No COAX® cartridge (slave unit)	AA
a	COAX® cartridge MIDI Pi48-2	AB
b	COAX® cartridge MIDI Pi48-3	AC
c	COAX® cartridge MIDI Pi48-2, non-return valve	AD
d	COAX® cartridge MIDI Pi48-3, non-return valve	AE
e	COAX® cartridge MIDI Si32-2	AF
f	COAX® cartridge MIDI Si32-3	AG
g	COAX® cartridge MIDI Si32-2, non-return valve	AH
h	COAX® cartridge MIDI Si32-3, non-return valve	AI

	2. Mounting/orientation	VGS code
	4x M6 top, flush mount	00
	4x M6 top, angle bracket	01
i	M12 20 mm top	02
j	M12 20 mm right	03
k	M12 20 mm left	04
i	M12 20 mm top, angle bracket	05
j	M12 20 mm right, angle bracket	06
k	M12 20 mm left, angle bracket	07

3. Suction cup with fitting	VGS code
No suction cup	BA
BF110P 30°/60° Shore A	CO
BF110P 60° Shore A	CP

Example	Ordering number
VGS™5010 BF110P – Pi48-2, M12 20 mm top, BF110P 30°/60° Shore A	VGS5010 AB 02 CO

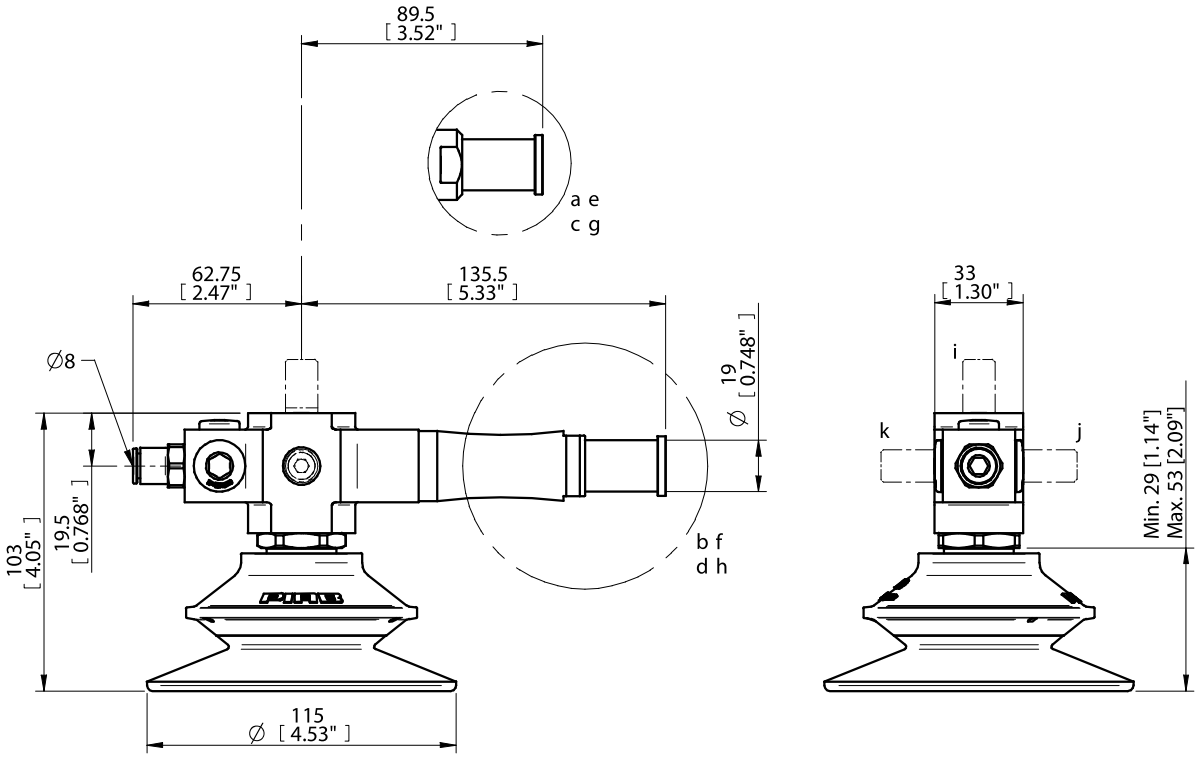

VGS™5010 BL50-3P

- Patented COAX® technology.
- Suitable for high flow applications such as plastic bag handling.
- The design provides enough strength and stability when handling plastic bags, while providing the softness and flexibility required to seal on uneven surfaces.
- This suction cup is made of DURAFLEX® material and the bellows and sealing lip are of different hardness.
  The suction cup has a special high-flow fitting.
- Available with a two or three-stage COAX® cartridge MIDI. Choose an Si cartridge for extra vacuum flow or a Pi cartridge for high performance at low feed pressure.
- The three-stage cartridge will give extra high initial vacuum flow, suitable in high speed applications.
- Easy installation and flexible positioning with several mounting options.

TECHNICAL DATA

Description	Unit	Value
Feed pressure, optimum	psi	44 (Pi), 87 (Si)
Feed pressure, max.	psi	101.5
Noise level	dBA	73–83
Temperature range	°F	50-122
Weight	oz	8.68-14.8
Material		Al, SS, NBR, PA, PP, PU

RECOMMENDED LOAD WITH BUILT-IN SAFETY FACTOR OF 2 AND RESPONSE TIME, 30°/70° SHORE

COAX® cartridge	Feed pressure psi	Air consumption and compressor power, continuous operation	Material to be handled (see table below)	Recommended perpendicular load with safety factor 2 lbf	Recommended parallel (shear) load with safety factor 2 lbf	Response time to 15 -inHg with Pi48-2 s	Response time to 15 -inHg with Pi48-3 s
Si	87	3.71 scfm, 577W [0.77 hp]	Plywood	7.42	5.85*	Response time varies based on quality and porosity of handled material	
Si	87	3.71 scfm, 577W [0.77 hp]	Corrugated	7.42	5.40*		
Pi	46	4.24 scfm, 660W [0.88 hp]	Dry steel	9.67	4.27*	0.020	0.019
Pi	46	4.24 scfm, 660W [0.88 hp]	Oily steel	N/A	N/A	N/A	N/A

**The suction cup is not intended for handling shear lifts. The values are given as a dimensioning guide to be used when, e.g., the acceleration/ retardation causes shear forces.*

Remark: The compressor power is calculated according to: 155 W consumed electric power per produced scfm compressed air, valid for a normally sized 7 [100 psi] bar compressor.

Material definition: Corrugated cardboard = B Flute 3 mm, 80 Gurley seconds.

ORDERING INFORMATION

	1. COAX® cartridge	VGS code
	No COAX® cartridge (slave unit)	AA
a	COAX® cartridge MIDI Pi48-2	AB
b	COAX® cartridge MIDI Pi48-3	AC
c	COAX® cartridge MIDI Pi48-2, non-return valve	AD
d	COAX® cartridge MIDI Pi48-3, non-return valve	AE
e	COAX® cartridge MIDI Si32-2	AF
f	COAX® cartridge MIDI Si32-3	AG
g	COAX® cartridge MIDI Si32-2, non-return valve	AH
h	COAX® cartridge MIDI Si32-3, non-return valve	AI

	2. Mounting/orientation	VGS code
	4x M6 top, flush mount	00
	4x M6 top, angle bracket	01
i	M12 20 mm top	02
j	M12 20 mm right	03
k	M12 20 mm left	04
i	M12 20 mm top, angle bracket	05
j	M12 20 mm right, angle bracket	06
k	M12 20 mm left, angle bracket	07

3. Suction cup with fitting	VGS code
No suction cup	BA
BL50-3P 30°/70° Shore A	CX

Example	Ordering number
VGS™5010 BL50-3P – Pi48-2, M12 20 mm top, BL50-3P 30°/70° Shore A	VGS5010 AB 02 CX

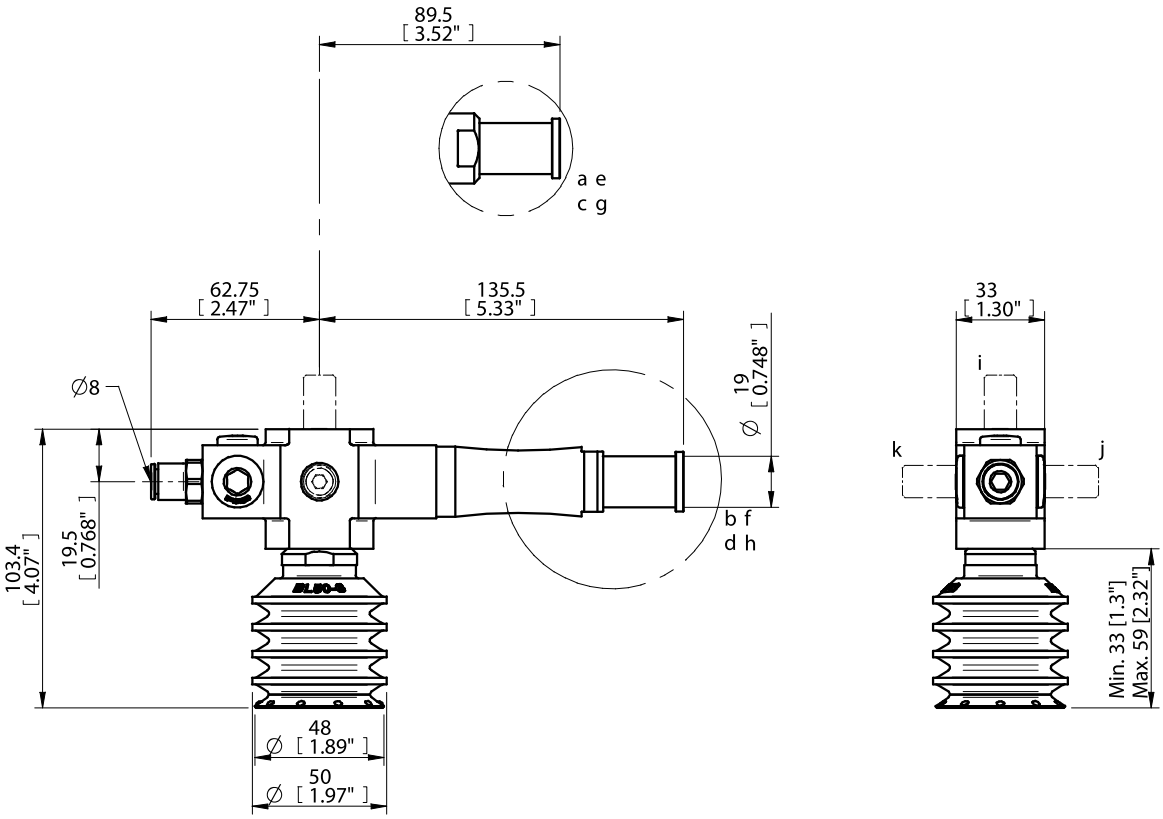

VGS™5010 BX75P

- Patented COAX® technology.
- Suitable for level adjustment and for uneven and porous surfaces such as cardboard, etc.
- In the two-colored version the bellows and the sealing lip are of different hardness, which makes the suction cup strong and, at the same time, soft and flexible with good sealing capability.
- A filter disk inside the cup keeps dust out of the system.
- Available with a two or three-stage COAX® cartridge MIDI. Choose an Si cartridge for extra vacuum flow or a Pi cartridge for high performance at low feed pressure.
- The three-stage cartridge will give extra high initial vacuum flow, suitable in high speed applications.
- Easy installation and flexible positioning with several mounting options.

TECHNICAL DATA

Description	Unit	Value
Feed pressure, optimum	psi	44 (Pi), 87 (Si)
Feed pressure, max.	psi	101.5
Noise level	dBA	73–83
Temperature range	°F	50-122
Weight	oz	11.7-17.9
Material		Al, SS, NBR, PA, PP, PU

RECOMMENDED LOAD WITH BUILT-IN SAFETY FACTOR OF 2 AND RESPONSE TIME, 30°/60° SHORE

COAX® cartridge	Feed pressure psi	Air consumption and compressor power, continuous operation	Material to be handled (see table below)	Recommended perpendicular load with safety factor 2 lbf	Recommended parallel (shear) load with safety factor 2 lbf	Response time to 15 -inHg with Pi48-2 s	Response time to 15 -inHg with Pi48-3 s
Si	87	3.71 scfm, 577W [0.77 hp]	Plywood	13.9	10.6*	Response time varies based on quality and porosity of handled material	
Si	87	3.71 scfm, 577W [0.77 hp]	Corrugated	13.9	10.8*		
Pi	46	4.24 scfm, 660W [0.88 hp]	Dry steel	16.0	13.0*	0.034	0.033
Pi	46	4.24 scfm, 660W [0.88 hp]	Oily steel	16.0	7.19*	0.034	0.033

**The suction cup is not intended for handling shear lifts. The values are given as a dimensioning guide to be used when, e.g., the acceleration/ retardation causes shear forces.*

RECOMMENDED LOAD WITH BUILT-IN SAFETY FACTOR OF 2 AND RESPONSE TIME, 60° SHORE

COAX® cartridge	Feed pressure psi	Air consumption and compressor power, continuous operation	Material to be handled (see table below)	Recommended perpendicular load with safety factor 2 lbf	Recommended parallel (shear) load with safety factor 2 lbf	Response time to 15 -inHg with Pi48-2 s	Response time to 15 -inHg with Pi48-3 s
Si	87	3.71 scfm, 577W [0.77 hp]	Plywood	13.9	10.6*	Response time varies based on quality and porosity of handled material	
Si	87	3.71 scfm, 577W [0.77 hp]	Corrugated	13.9	10.8*		
Pi	46	4.24 scfm, 660W [0.88 hp]	Dry steel	18.7	16.9*	0.034	0.033
Pi	46	4.24 scfm, 660W [0.88 hp]	Oily steel	19.1	10.8*	0.034	0.033

**The suction cup is not intended for handling shear lifts. The values are given as a dimensioning guide to be used when, e.g., the acceleration/ retardation causes shear forces.*

Remark: The compressor power is calculated according to: 155 W consumed electric power per produced scfm compressed air, valid for a normally sized 7 [100 psi] bar compressor.

Material definition: Corrugated cardboard = B Flute 3 mm, 80 Gurley seconds.

ORDERING INFORMATION

	1. COAX® cartridge	VGS code
	No COAX® cartridge (slave unit)	AA
a	COAX® cartridge MIDI Pi48-2	AB
b	COAX® cartridge MIDI Pi48-3	AC
c	COAX® cartridge MIDI Pi48-2, non-return valve	AD
d	COAX® cartridge MIDI Pi48-3, non-return valve	AE
e	COAX® cartridge MIDI Si32-2	AF
f	COAX® cartridge MIDI Si32-3	AG
g	COAX® cartridge MIDI Si32-2, non-return valve	AH
h	COAX® cartridge MIDI Si32-3, non-return valve	AI

	2. Mounting/orientation	VGS code
	4x M6 top, flush mount	00
	4x M6 top, angle bracket	01
i	M12 20 mm top	02
j	M12 20 mm right	03
k	M12 20 mm left	04
i	M12 20 mm top, angle bracket	05
j	M12 20 mm right, angle bracket	06
k	M12 20 mm left, angle bracket	07

3. Suction cup with fitting	VGS code
No suction cup	BA
BX75P 30°/60° Shore A	CY
BX75P 60° Shore A	CZ

Example	Ordering number
VGS™5010 BX75P – Pi48-2, M12 20 mm top, BX75P 30°/60° Shore A	VGS5010 AB 02 CY

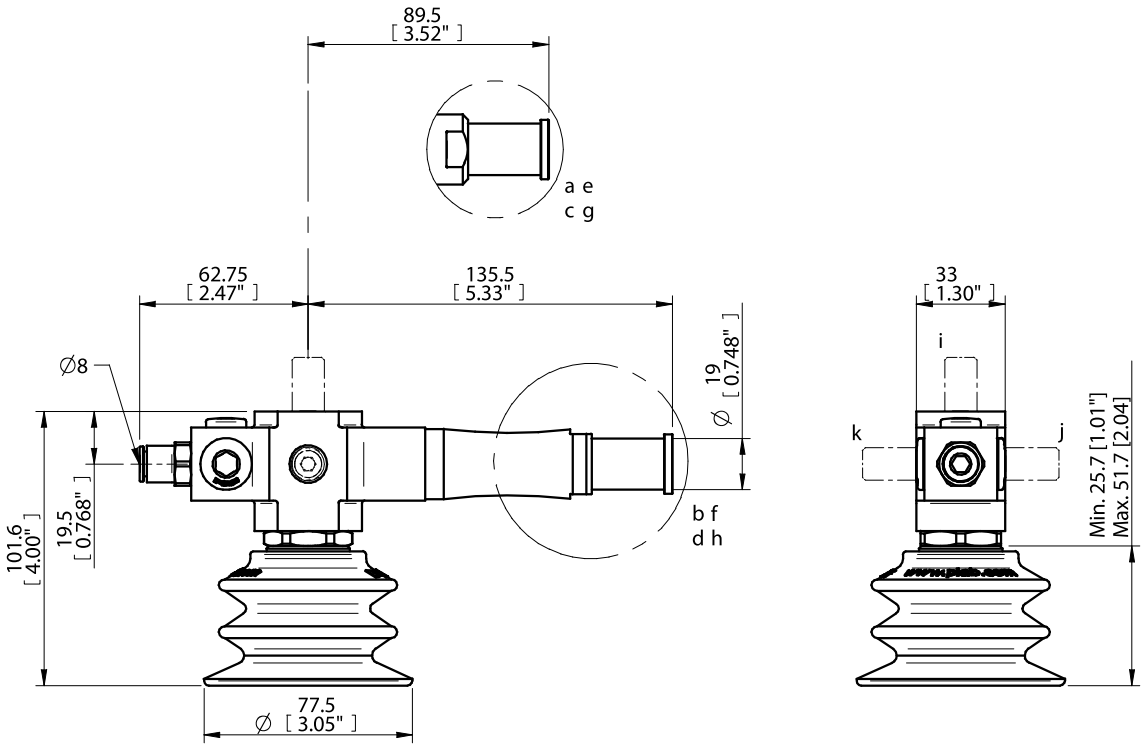

VGS™5010 BX110P

- Patented COAX® technology.
- Suitable for level adjustment and for uneven and porous surfaces such as cardboard, etc.
- In the two-colored version the bellows and the sealing lip are of different hardness, which makes the suction cup strong and, at the same time, soft and flexible with good sealing capability.
- A filter disk inside the cup keeps dust out of the system.
- Available with a two or three-stage COAX® cartridge MIDI. Choose an Si cartridge for extra vacuum flow or a Pi cartridge for high performance at low feed pressure.
- The three-stage cartridge will give extra high initial vacuum flow, suitable in high speed applications.
- Easy installation and flexible positioning with several mounting options.

TECHNICAL DATA

Description	Unit	Value
Feed pressure, optimum	psi	44 (Pi). 87 (Si)
Feed pressure, max.	psi	101.5
Noise level	dBA	73–83
Temperature range	°F	50-122
Weight	oz	17.6-23.7
Material		Al, SS, NBR, PA, PP, PU

RECOMMENDED LOAD WITH BUILT-IN SAFETY FACTOR OF 2 AND RESPONSE TIME, 30°/60° SHORE

COAX® cartridge	Feed pressure psi	Air consumption and compressor power, continuous operation	Material to be handled (see table below)	Recommended perpendicular load with safety factor 2 lbf	Recommended parallel (shear) load with safety factor 2 lbf	Response time to 15 -inHg with Pi48-2 s	Response time to 15 -inHg with Pi48-3 s
Si	87	3.71 scfm, 577W [0.77 hp]	Plywood	32.1	18.2*	Response time varies based on quality and	
Si	87	3.71 scfm, 577W [0.77 hp]	Corrugated	29.4	17.3*	porosity of handled material	
Pi	46	4.24 scfm, 660W [0.88 hp]	Dry steel	32.6	20.2*	0.100	0.096
Pi	46	4.24 scfm, 660W [0.88 hp]	Oily steel	31.5	10.6*	0.100	0.096

**The suction cup is not intended for handling shear lifts. The values are given as a dimensioning guide to be used when, e.g., the acceleration/ retardation causes shear forces.*

RECOMMENDED LOAD WITH BUILT-IN SAFETY FACTOR OF 2 AND RESPONSE TIME, 60° SHORE

COAX® cartridge	Feed pressure psi	Air consumption and compressor power, continuous operation	Material to be handled (see table below)	Recommended perpendicular load with safety factor 2 lbf	Recommended parallel (shear) load with safety factor 2 lbf	Response time to 15 -inHg with Pi48-2 s	Response time to 15 -inHg with Pi48-3 s
Si	87	3.71 scfm, 577W [0.77 hp]	Plywood	31.2	18.7*	Response time varies based on quality and	
Si	87	3.71 scfm, 577W [0.77 hp]	Corrugated	27.9	18.0*	porosity of handled material	
Pi	46	4.24 scfm, 660W [0.88 hp]	Dry steel	33.0	26.1*	0.100	0.096
Pi	46	4.24 scfm, 660W [0.88 hp]	Oily steel	33.5	14.2*	0.100	0.096

**The suction cup is not intended for handling shear lifts. The values are given as a dimensioning guide to be used when, e.g., the acceleration retardation causes shear forces.*

Remark: The compressor power is calculated according to: 155 W consumed electric power per produced scfm compressed air, valid for a normally sized 7 [100 psi] bar compressor.

Material definition: Corrugated cardboard = B Flute 3 mm, 80 Gurley seconds.

ORDERING INFORMATION

	1. COAX® cartridge	VGS code
	No COAX® cartridge (slave unit)	AA
a	COAX® cartridge MIDI Pi48-2	AB
b	COAX® cartridge MIDI Pi48-3	AC
c	COAX® cartridge MIDI Pi48-2, non-return valve	AD
d	COAX® cartridge MIDI Pi48-3, non-return valve	AE
e	COAX® cartridge MIDI Si32-2	AF
f	COAX® cartridge MIDI Si32-3	AG
g	COAX® cartridge MIDI Si32-2, non-return valve	AH
h	COAX® cartridge MIDI Si32-3, non-return valve	AI

	2. Mounting/orientation	VGS code
	4x M6 top, flush mount	00
	4x M6 top, angle bracket	01
i	M12 20 mm top	02
j	M12 20 mm right	03
k	M12 20 mm left	04
i	M12 20 mm top, angle bracket	05
j	M12 20 mm right, angle bracket	06
k	M12 20 mm left, angle bracket	07

3. Suction cup with fitting	VGS code
No suction cup	BA
BX110P 30°/60° Shore A	CQ
BX110P 60° Shore A	CR

Example	Ordering number
VGS™5010 BX110P – Pi48-2, M12 20 mm top, BX110P 30°/60° Shore A	VGS5010 AB 02 CQ

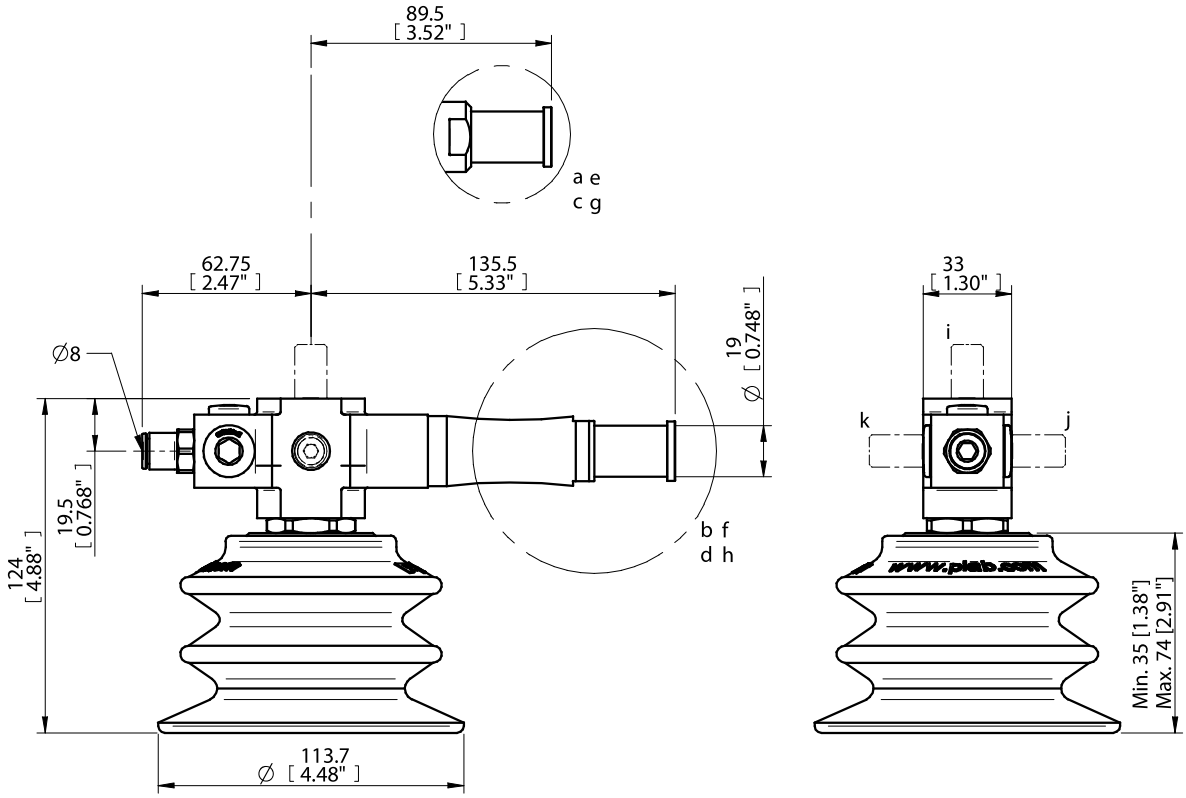

VGS™5010 F110P

- Patented COAX® technology.
- Suitable for all flat and rough surfaces.
- Good stability and little inherent movement due to high friction of the rubber material.
- Recommended when the lifting force is parallell to the surface of the object.
- Available with a two or three-stage COAX® cartridge MIDI. Choose an Si cartridge for extra vacuum flow or a Pi cartridge for high performance at low feed pressure.
- The three-stage cartridge will give extra high initial vacuum flow, suitable in high speed applications.
- Easy installation and flexible positioning with several mounting options.

TECHNICAL DATA

Description	Unit	Value
Feed pressure, optimum	psi	44 (Pi), 87 (Si)
Feed pressure, max.	psi	101.5
Noise level	dBA	73–83
Temperature range	°F	50-122
Weight	oz	14.1-20.3
Material		Al, SS, NBR, PA, PP, PU

RECOMMENDED LOAD WITH BUILT-IN SAFETY FACTOR OF 2 AND RESPONSE TIME, 30°/60° SHORE

COAX® cartridge	Feed pressure psi	Air consumption and compressor power, continuous operation	Material to be handled (see table below)	Recommended perpendicular load with safety factor 2 lbf	Recommended parallel (shear) load with safety factor 2 lbf	Response time to 15 -inHg with Pi48-2 s	Response time to 15 -inHg with Pi48-3 s
Si	87	3.71 scfm, 577W [0.77 hp]	Plywood	58.7	43.8	Response time varies based on quality and porosity of handled material	
Si	87	3.71 scfm, 577W [0.77 hp]	Corrugated	40.7	37.3		
Pi	46	4.24 scfm, 660W [0.88 hp]	Dry steel	75.3	69.2	0.024	0.024
Pi	46	4.24 scfm, 660W [0.88 hp]	Oily steel	68.3	21.4	0.024	0.024

RECOMMENDED LOAD WITH BUILT-IN SAFETY FACTOR OF 2 AND RESPONSE TIME, 60° SHORE

Feed pressure psi	Air consumption and compressor power, continuous operation	Material to be handled (see table below)	Recommended perpendicular load with safety factor 2 lbf	Recommended parallel (shear) load with safety factor 2 lbf	Response time to 15 -inHg with Pi48-2 s	Response time to 15 -inHg with Pi48-3 s
87	3.71 scfm, 577W [0.77 hp]	Plywood	58.7	32.6	Response time varies based on quality and porosity of handled material	
87	3.71 scfm, 577W [0.77 hp]	Corrugated	34.6	33.5		
46	4.24 scfm, 660W [0.88 hp]	Dry steel	79.1	74.6	0.024	0.024
46	4.24 scfm, 660W [0.88 hp]	Oily steel	68.3	36.2	0.024	0.024

Remark: The compressor power is calculated according to: 155 W consumed electric power per produced scfm compressed air, valid for a normally sized 7 [100 psi] bar compressor.

Material definition: Corrugated cardboard = B Flute 3 mm, 80 Gurley seconds.

ORDERING INFORMATION

	1. COAX® cartridge	VGS code
	No COAX® cartridge (slave unit)	AA
a	COAX® cartridge MIDI Pi48-2	AB
b	COAX® cartridge MIDI Pi48-3	AC
c	COAX® cartridge MIDI Pi48-2, non-return valve	AD
d	COAX® cartridge MIDI Pi48-3, non-return valve	AE
e	COAX® cartridge MIDI Si32-2	AF
f	COAX® cartridge MIDI Si32-3	AG
g	COAX® cartridge MIDI Si32-2, non-return valve	AH
h	COAX® cartridge MIDI Si32-3, non-return valve	AI

	2. Mounting/orientation	VGS code
	4x M6 top, flush mount	00
	4x M6 top, angle bracket	01
i	M12 20 mm top	02
j	M12 20 mm right	03
k	M12 20 mm left	04
i	M12 20 mm top, angle bracket	05
j	M12 20 mm right, angle bracket	06
k	M12 20 mm left, angle bracket	07

3. Suction cup with fitting	VGS code
No suction cup	BA
F110P 30°/60° Shore A	CS
F110P 60° Shore A	CT

Example	Ordering number
VGS™5010 F110P – Pi48-2, M12 20 mm top, F110P 30°/60° Shore A	VGS5010 AB 02 CS

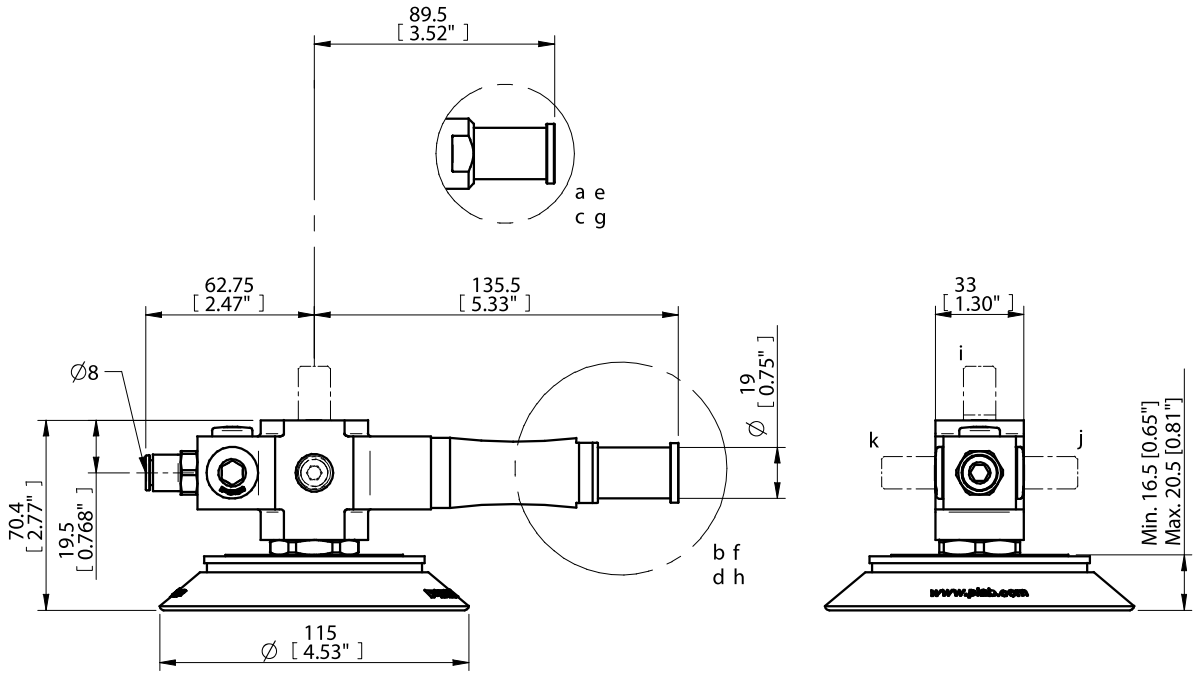

VGS™5010 0B65X170P

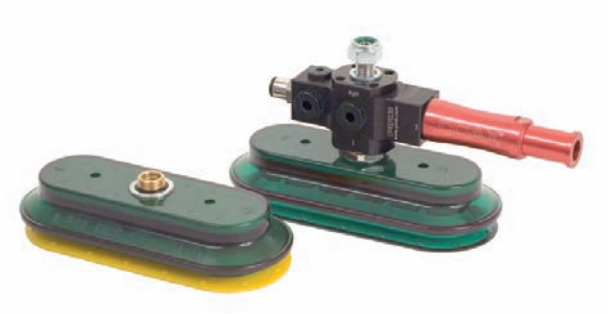

- Patented COAX® technology.
- Suitable for level adjustment and for uneven, porous and oblong surfaces such as cardboard boxes. Can handle objects with height differences.
- Lifting movement to separate small and thin objects.
- In the two-colored version the bellows and the sealing lip are of different hardness, which makes the suction cup strong and, at the same time, soft and flexible with good sealing capability.
- Available with a two or three-stage COAX® cartridge MIDI. Choose an Si cartridge for extra vacuum flow or a Pi cartridge for high performance at low feed pressure.
- The three-stage cartridge will give extra high initial vacuum flow, suitable in high speed applications.
- Easy installation and flexible positioning with several mounting options.

TECHNICAL DATA

Description	Unit	Value
Feed pressure, optimum	psi	44 (Pi), 87 (Si)
Feed pressure, max.	psi	101.5
Noise level	dBA	73–83
Temperature range	°F	50-122
Weight	oz	17.7-23.9
Material		Al, SS, NBR, PA, PP, PU

RECOMMENDED LOAD WITH BUILT-IN SAFETY FACTOR OF 2 AND RESPONSE TIME, 30°/60° SHORE

COAX® cartridge	Feed pressure psi	Air consumption and compressor power, continuous operation	Material to be handled (see table below)	Recommended perpendicular load with safety factor 2 lbf	Recommended parallel (shear) load with safety factor 2 lbf	Response time to 15 -inHg with Pi48-2 s	Response time to 15 -inHg with Pi48-3 s
Si	87	3.71 scfm, 577W [0.77 hp]	Plywood	48.1	51.9	Response time varies based on quality and	
Si	87	3.71 scfm, 577W [0.77 hp]	Corrugated	34.6	42.7	porosity of handled material	
Pi	46	4.24 scfm, 660W [0.88 hp]	Dry steel	59.6	58.2	0.075	0.073
Pi	46	4.24 scfm, 660W [0.88 hp]	Oily steel	53.7	32.8	0.075	0.073

RECOMMENDED LOAD WITH BUILT-IN SAFETY FACTOR OF 2 AND RESPONSE TIME, 60° SHORE

COAX® cartridge	Feed pressure psi	Air consumption and compressor power, continuous operation	Material to be handled (see table below)	Recommended perpendicular load with safety factor 2 lbf	Recommended parallel (shear) load with safety factor 2 lbf	Response time to 15 -inHg with Pi48-2 s	Response time to 15 -inHg with Pi48-3 s
Si	87	3.71 scfm, 577W [0.77 hp]	Plywood	49.2	45.4	Response time varies based on quality and	
Si	87	3.71 scfm, 577W [0.77 hp]	Corrugated	22.5	41.8	porosity of handled material	
Pi	46	4.24 scfm, 660W [0.88 hp]	Dry steel	61.1	67.4	0.075	0.073
Pi	46	4.24 scfm, 660W [0.88 hp]	Oily steel	58.5	45.0	0.075	0.073

Remark: The compressor power is calculated according to: 155 W consumed electric power per produced scfm compressed air, valid for a normally sized 7 [100 psi] bar compressor.

Material definition: Corrugated cardboard = B Flute 3 mm, 80 Gurley seconds.

ORDERING INFORMATION

	1. COAX® cartridge	VGS code
	No COAX® cartridge (slave unit)	AA
a	COAX® cartridge MIDI Pi48-2	AB
b	COAX® cartridge MIDI Pi48-3	AC
c	COAX® cartridge MIDI Pi48-2, non-return valve	AD
d	COAX® cartridge MIDI Pi48-3, non-return valve	AE
e	COAX® cartridge MIDI Si32-2	AF
f	COAX® cartridge MIDI Si32-3	AG
g	COAX® cartridge MIDI Si32-2, non-return valve	AH
h	COAX® cartridge MIDI Si32-3, non-return valve	AI

	2. Mounting/orientation	VGS code
	4x M6 top, flush mount	00
	4x M6 top, angle bracket	01
i	M12 20 mm top	02
j	M12 20 mm right	03
k	M12 20 mm left	04
i	M12 20 mm top, angle bracket	05
j	M12 20 mm right, angle bracket	06
k	M12 20 mm left, angle bracket	07

3. Suction cup with fitting	VGS code
No suction cup	BA
OB65x170P 30°/60° Shore A	CU
OB65x170P 60° Shore A	CV

Example	Ordering number
VGS™5010 OB65x170P – Pi48-2, M12 20 mm top, OB65x170P 30°/60° Shore A	VGS5010 AB 02 CU

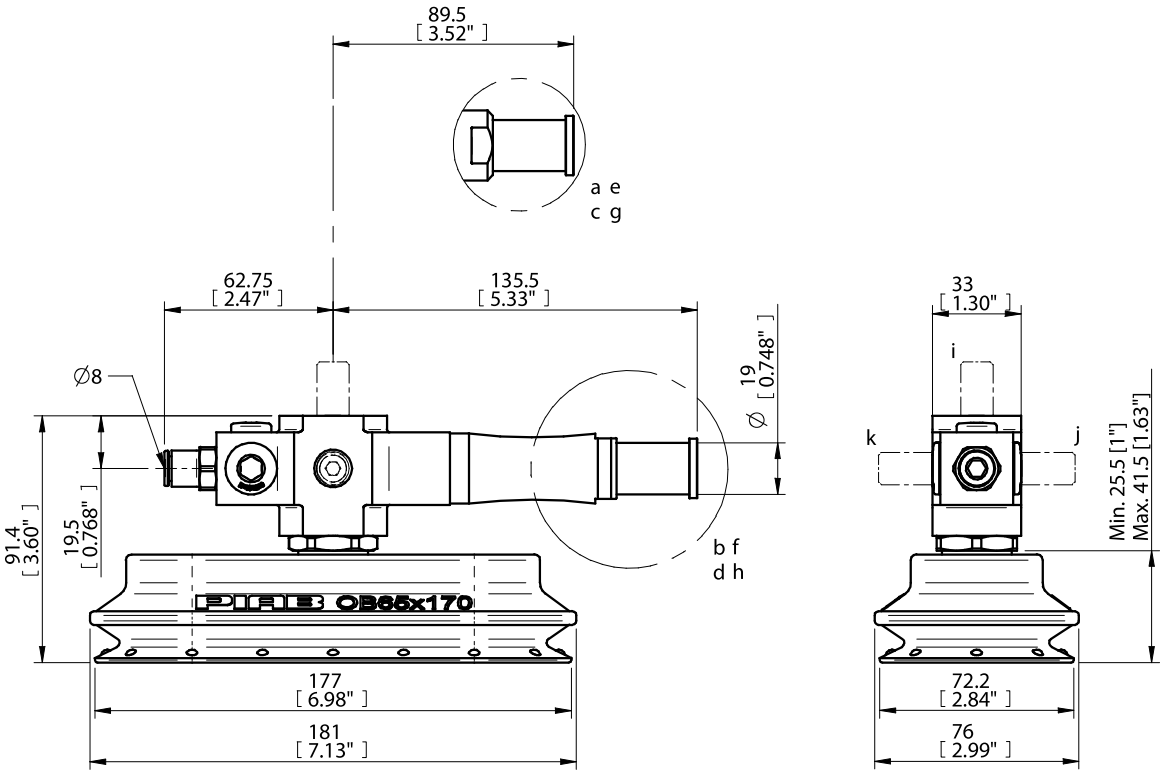

VGS™5010 MOUNTING-KITS

- Easy attachment to standard extrusion and profile systems
- Flexible positioning
- Quick setup and change-over
- Durable and non-rotating installation

TECHNICAL DATA

Description	Unit	Value			
		01.14.162	01.14.163	01.14.164	01.14.152
Material		Al, SS, PA, NBR	Al, SS, Steel, PA, NBR	SS, Steel, PA, NBR	SS, Steel, PA, NBR
Weight	oz	1.23	4.69	2.07	5.44

ORDERING INFORMATION

	Description	Part No.
A	4x M6 top, flush mount	01.14.162
B	4x M6 top, angle bracket	01.14.163
C	M12 20 mm top	01.14.164
D	M12 20 mm top, angle bracket	01.14.152

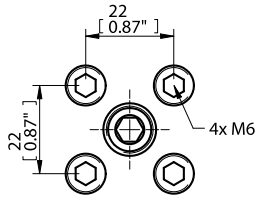

A

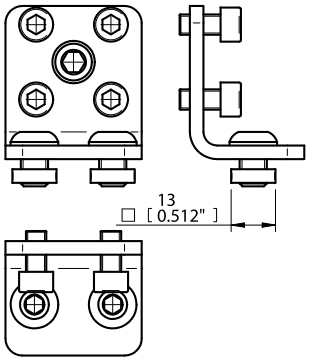

B

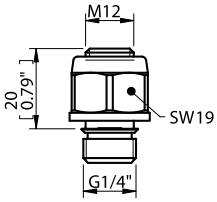

C

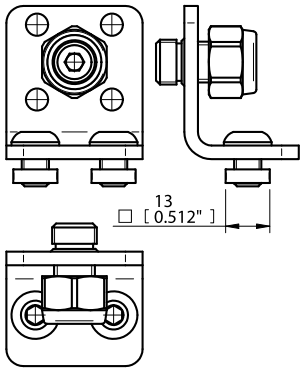

D

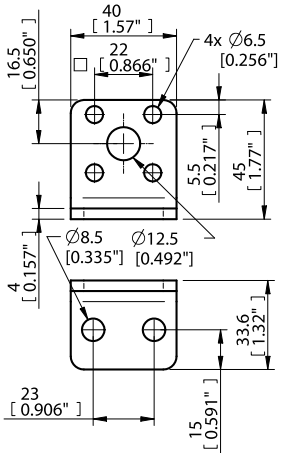

Angle bracket included in B & D

AVP — ADJUSTABLE VACUUM PALLETIZER

- Lightweight design
- Simple X/Y axis adjustability
- Flexible modular design
- Energy saving from COAX® vacuum technology

TECHNICAL DATA

Description	Unit	Value		
		2 rails	4 rails	6 rails
Weight, AVP BX75P	lb	16.9	31.2	45.8
Weight, AVP BX110P	lb	19.1	35.6	52.1
Temperature range	°F	50-122		
Material		AL,PUR,POM,SS,Fe,CuZn,PP,NBR		
T-slot opening dimension	mm	10		

LIFTING FORCES PER CUP

Suction cup model	Material to be handled	Lifting forces vertical to the surface, lbf, at vacuum level			Lifting forces parallel to the surface, lbf, at vacuum level		
		6 -inHg	18 -inHg	27 -inHg	6 -inHg	18 -inHg	27 -inHg
BX75P	Corrugated	8.77	25.6	—	8.09	12.8	—
BX75P	Dry steel	8.54	23.2	34.4	8.77	15.7	21.4
BX110P	Corrugated	20.9	38.9*	—	15.3	31.2*	—
BX110P	Dry steel	32.1	75.8	90.4	17.5	39.8	44.7

** Lifting forces at maximum vacuum level 16.5 -inHg*

LIFTING FORCES & RESPONSE TIME PER CUP

Suction cup model	Feed pressure psi	Material to be handled	Lifting forces vertical to the surface, lbf	Lifting forces par allel to the surface, lbf	Response time to 15 -inHg with Pi12-2, s		
BX75P	45	Corrugated	21.4	11.9	**		
BX75P	45	Dry steel	34.4	21.4	0.115		
BX110P	45	Corrugated	34.4	23.4	**		
BX110P	45	Dry steel	90.4	44.7	0.372		

*** Response time varies based on quality and porosity of handled material.*

Material definitions:
Corrugated cardboard = B-flute 3 mm, 80 Gurley seconds.
Dry steel = cleaned rolled sheet metal.

TECHNICAL DATA VACUUM CARTRIDGE

Pump model	Feed pressure psi	Max. vacuum -inHg	Air consumption scfm	Noise level dBA	Compressor power – continuous operation hp
Pi12-2	45	27.0	1.00	65–74	0.21
Pi12-2	87	24.9	1.67	77–82	0.35

ORDERING INFORMATION

Description	Part No.
AVP BX75P 2 Rail, Adjustable Vacuum Palletizer	01.11.103
AVP BX75P 4 Rail, Adjustable Vacuum Palletizer	01.11.104
AVP BX75P 6 Rail, Adjustable Vacuum Palletizer	01.11.105
AVP BX110P 2 Rail, Adjustable Vacuum Palletizer	01.11.106
AVP BX110P 4 Rail, Adjustable Vacuum Palletizer	01.11.107
AVP BX110P 6 Rail, Adjustable Vacuum Palletizer	01.11.108

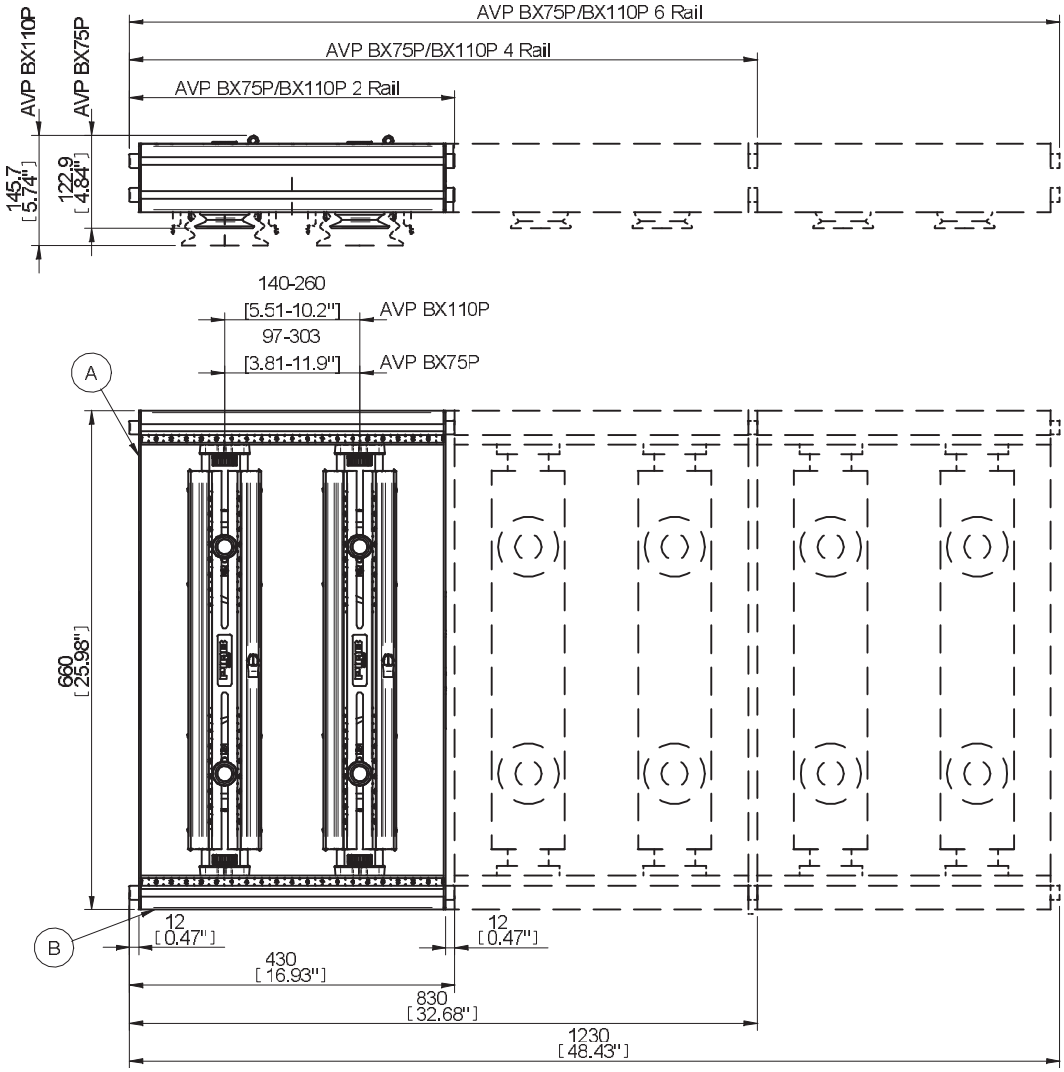

A: Side plate
B: Profile, aluminum extrusion

AVR — ADJUSTABLE VACUUM RAIL

- Lightweight design
- Simple X/Y axis adjustability
- Flexible modular design
- Energy saving from COAX® vacuum technology

TECHNICAL DATA

Description	Unit	Value
Weight, AVR BX75P	lb	4.6
Weight, AVR BX110P	lb	5.7
Temperature range	°F	50-122
Material		AL,PUR,POM,SS,Fe,CuZn,PP,NBR
T-slot opening dimension	mm	10

LIFTING FORCES PER CUP

Suction cup model	Material to be handled	Lifting forces vertical to the surface, lbf, at vacuum level			Lifting forces parallel to the surface, lbf, at vacuum level		
		6 -inHg	18 -inHg	27 -inHg	6 -inHg	18 -inHg	27 -inHg
BX75P	Corrugated	8.77	25.6	—	8.09	12.8	—
BX75P	Dry steel	8.54	23.2	34.4	8.77	15.7	21.4
BX110P	Corrugated	20.9	38.9*	—	15.3	31.2*	—
BX110P	Dry steel	32.1	75.8	90.4	17.5	39.8	44.7

** Lifting forces at maximum vacuum level 16.5 -inHg*

LIFTING FORCES & RESPONSE TIME PER CUP

Suction cup model	Feed pressure psi	Material to be handled	Lifting forces vertical to the surface, lbf	Lifting forces par allel to the surface, lbf	Response time to 15 -inHg with Pi12-2, s		
BX75P	45	Corrugated	21.4	11.9	**		
BX75P	45	Dry steel	34.4	21.4	0.115		
BX110P	45	Corrugated	34.4	23.4	**		
BX110P	45	Dry steel	90.4	44.7	0.372		

*** Response time varies based on quality and porosity of handled material.*

Material definitions:
Corrugated cardboard = B-flute 3 mm, 80 Gurley seconds.
Dry steel = cleaned rolled sheet metal.

TECHNICAL DATA VACUUM CARTRIDGE

Pump model	Feed pressure psi	Max. vacuum -inHg	Air consumption scfm	Noise level dBA	Compressor power – continuous operation hp
Pi12-2	45	27.0	1.00	65–74	0.21
Pi12-2	87	24.9	1.67	77–82	0.35

ORDERING INFORMATION

Description	Part No.
AVR BX75P, Adjustable Vacuum Rail	01.10.053
AVR BX110P, Adjustable Vacuum Rail	01.10.054

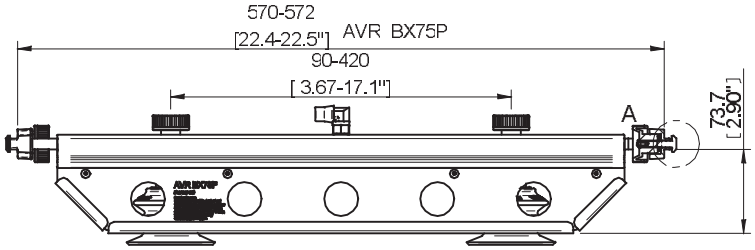

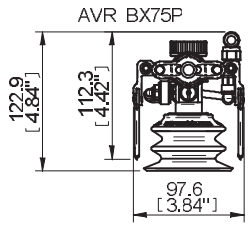

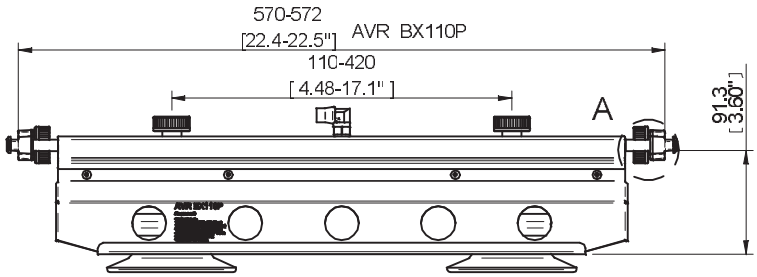

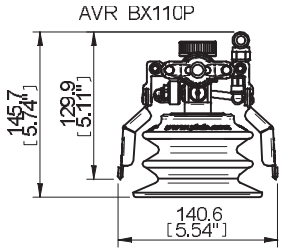

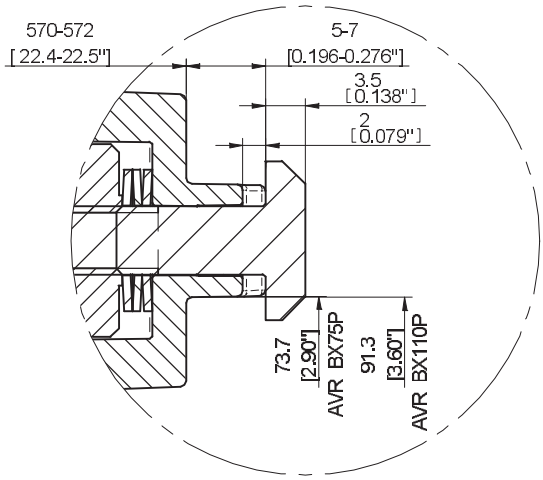

DETAIL A

ORDERING INFORMATION ACCESSORIES

Description: support frame, aluminum extrusion & side plate	Part No.
Profile 45x90L 400 mm 4xM12, AVP BX75P-BX110P	01.11.316
Profile 45x90L 800 mm 4xM12, AVP BX75P-BX110P	01.11.317
Profile 45x90L 1200 mm 4xM12, AVP BX75P-BX110P	01.11.318
Side plate AVP BX75P-BX110P	01.11.226

See drawing AVP, Adjustable Vacuum Palletizer for support frame dimensions.

VACTIVATOR V10

- Automatic stroke control
- Actuated by vacuum only
- Simple solution for high picking speed
- Easy installation
- Designed for over 30 million cycles under normal industrial conditions
- Low energy consumption thanks to precise tolerances
- Recommended only for vertical applications.

TECHNICAL DATA

Description	Unit	Value
Temperature range	°F	50-86
Cylinder bore	in	0.71
Recommended max. vertical load	oz	10.6
Material		Al, NBR, POM, SS, PA, Fe, PU
Mounting, position		vertical

TECHNICAL DATA, SPECIFIC

Description Part No.	Unit	Value 01.12.645
Recommended pump performance for V10		Vacuum Flow >0.55 scfm at a vacuum level of 9 -inHg
Stroke	in	0-0.79
Weight	oz	5.29

The frequency varies with suction flow and weight according to the diagram below.

Performance with PIAB VGS™ and a PIAB B20 suction cup lifting an aluminium plate, which is a non-porous material, is shown in the diagrams below. A porous material will have to be compensated with a higher vacuum flow. The vacuum pump should be placed as close to the Vactivator as possible in order to shorten the reaction time.

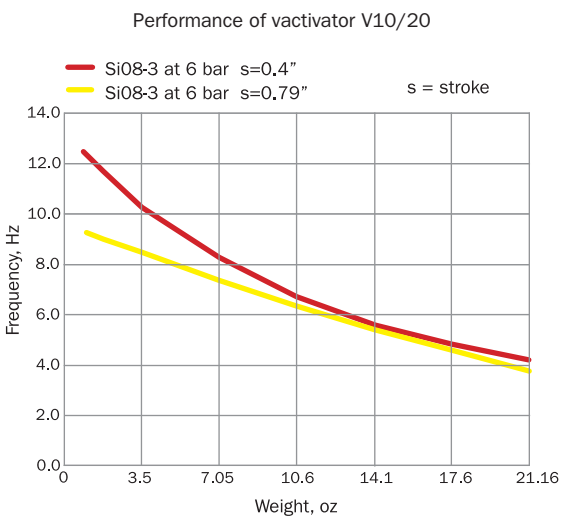

ORDERING INFORMATION

Description	Part No.
Vactivator V10/20	01.12.645

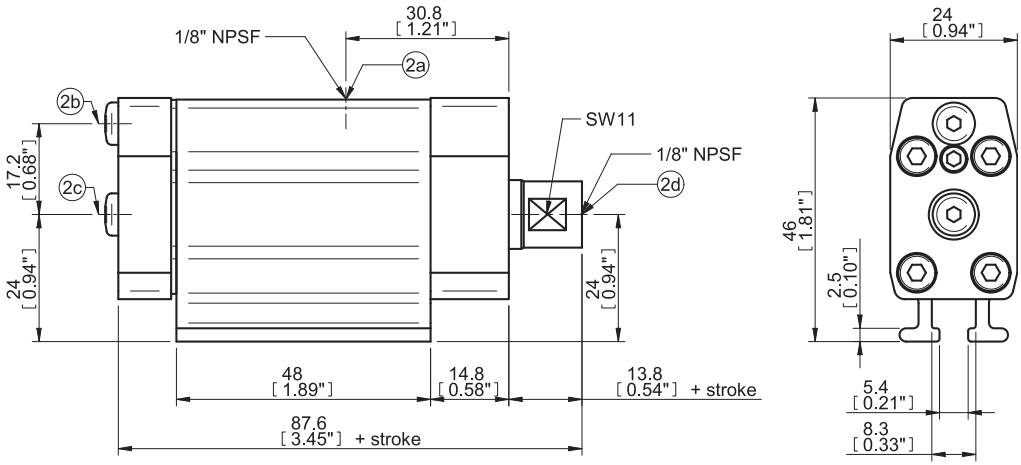

2a = Vacuum pump
2b = Vacuum sensing
2c = Blow-off
2d = Suction cup

555
OUT

Accessories

YOUR BEST SOLUTION – WITHOUT QUESTION

Our line of monitoring and control units for vacuum systems is unmatched when it comes to reliability. We focus on the overall solution, down to the last detail. We are fully aware that top quality components are as essential as designing pumps and suction cups that are in a class apart. You will find everything you need to monitor and control vacuum systems here.

Reliability, energy consumption and accurate control/monitoring are the key words.

SUPERVISION AND CONTROL

For best performance and efficiency in vacuum systems, it is important to supervise and control the flow of compressed air and vacuum.

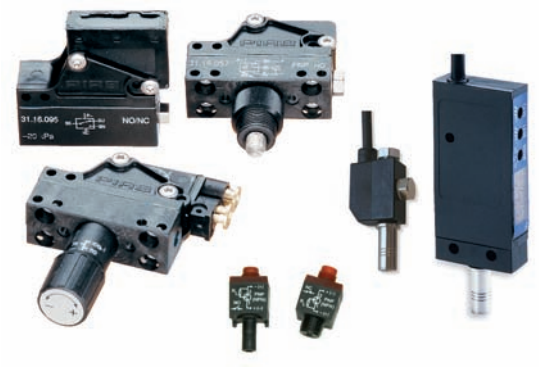

VACUUM SWITCHES

A vacuum switch can be used for many different applications.

- Converts a vacuum signal to an electric or pneumatic signal
- Actuates at a pre-set vacuum level
- Sequence signal in vacuum systems
- Safety signal for low vacuum level
- Signal at correct vacuum level
- Energy-saving systems

HYSTERESIS

Vacuum switches have different hysteresis. The hysteresis is the difference between the ON and the OFF levels.

The need or demand for a small or large hysteresis is different depending on the application.

When you want a fixed vacuum level, a small hysteresis is good, but if you want to use the switch for an ES application, a large hysteresis is necessary.

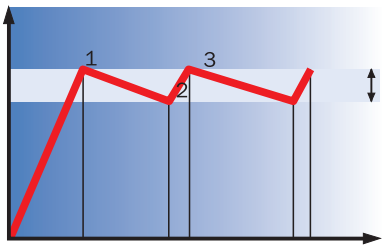

DESCRIPTION OF THE OUTPUTS FROM ELECTRONIC VACUUM SWITCHES

PNP / NPN OUTPUT, WHAT DOES IT MEAN?

A PNP transistor is generally connected to the positive rail and is sourcing the load.
The NPN is sinking the load and is generally connected to the ground.

If a load is higher than the output can handle, an extra transistor or relay can be used.

See example below.

PNP/NPN

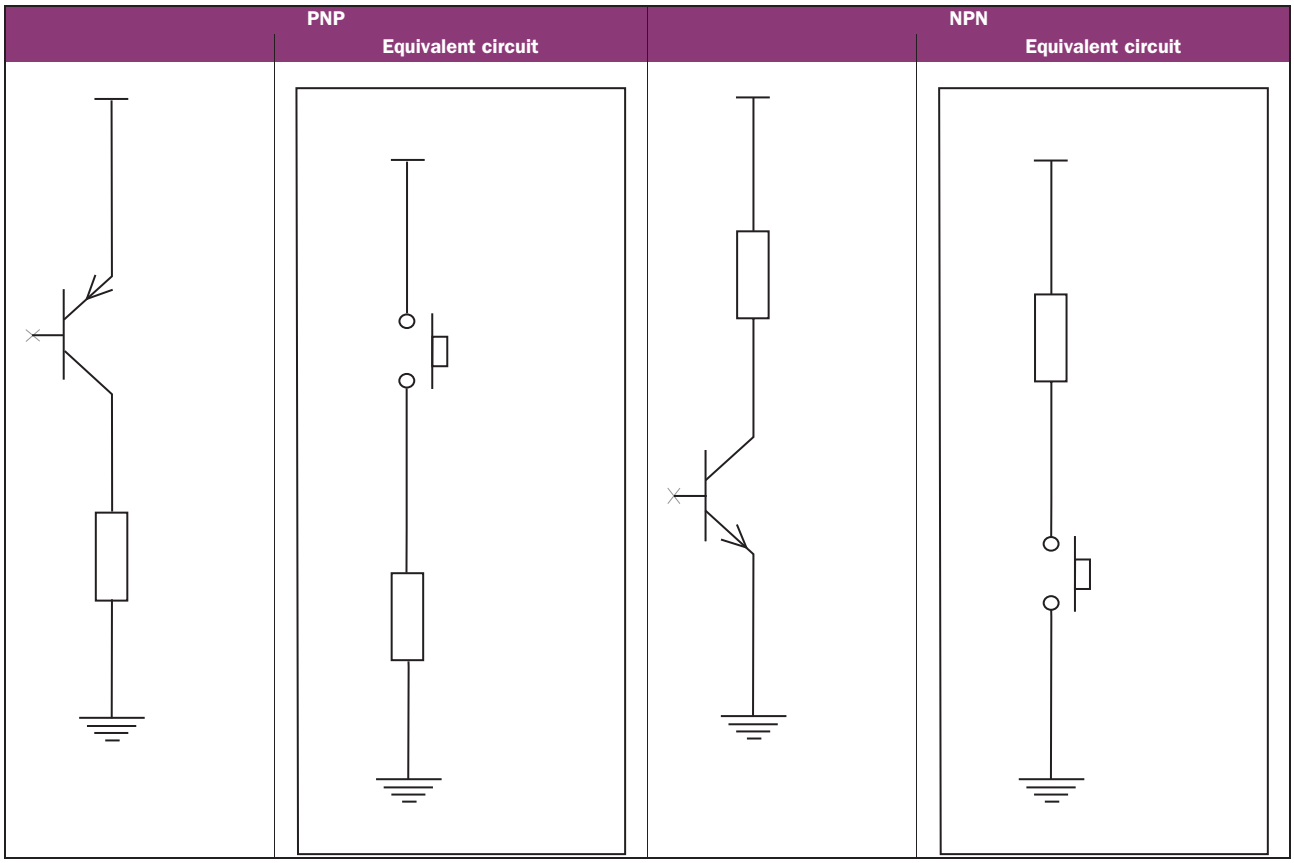

OHM'S LAW

Ohm's Law can be described to be the basic law within electronics.
It defines the relation between voltage, current and resistance.

The current is directly proportional to the voltage drop over a resistance.
Example: One volt over a one ohm resistor makes one ampere current through the resistor.

Electric power, measured in Watt, is a result of the voltage * current.

UNITS

U = Voltage (V)olt)
I = Current (A)mp)(mA = 0,001 A)
R = Resistance (R) (Ohm)(kOhm = 1000 Ohm)
P = Power (W)att)

FORMULAS

U = R*I, I = U/R, R = U/I
P = U*I, U = P/I, I = P/U

Example: 100mA = 2.4W/24V

VACUUM SWITCHES, INDUCTIVE UNIVERSAL

The adjustable vacuum switches are actuated at a set vacuum level and set by a knob.

The pre-set vacuum switches are actuated at a pre-set vacuum level, non-adjustable.

- Converts a vacuum signal to an electric signal.
- Vacuum-actuated membrane linked to a proximity-inductive universal switch.
- The output functions PNP NO, PNP NC, NPN NO and NPN NC are available in the vacuum switch.
- The switch must be connected in series with the load.

TECHNICAL DATA

Description	Unit	Value
Pressure, max	psi	87
Material		PBTP, PVC, PA, SS, NBR, POM Al, CuZn
Temperature range	°F	-13–176
Weight	oz	1.76-2.50
Connection Vacuum		M5
Hysteresis	-inHg	0.60
Cable		2 x 0.14 mm² x 6.56 ft
Supply voltage	VDC	24 (5–36)
Safety classification		IP67
Current Output, max	mA	200
Voltage drop, max	VDC	4.6

TECHNICAL DATA, SPECIFIC

Description	Unit	Value			
		31.16.064 / 01.04.350	31.16.089	31.16.090	31.16.091
Signal range	-inHg	3.0-28.0	3.0±0.3	9.0±0.9	21.0±1.5

Supplement 1

PNP NO = Normally Open, Positive logic. As the switch is activated, the gate at the feed current (+) closes and contact is established.

PNP NC = Normally Closed, Positive logic. As the switch is activated, the gate at the feed current (+) opens and contact is interrupted.

NPN NO = Normally Open, Negative logic. As the switch is activated, the gate at ground (-) closes and contact is established.

NPN NC = Normally Closed, Negative logic. As the switch is activated, the gate at ground (-) opens and contact is interrupted.

Note:

NO, Normally Open, in electrical circuits corresponds to an open circuit breaker, which means that, if the gate is open, no current can pass through.

NO, Normally Open, in pneumatic circuits corresponds to an open valve, which means that, if the valve is open, compressed air passes through.

ORDERING INFORMATION

	Description	Part No.
A	Vacuum switch, inductive universal, adjustable with knob	31.16.064
B	Vacuum switch, inductive universal, pre-set (Signal range 3.0 -inHg)	31.16.089
B	Vacuum switch, inductive universal, pre-set (Signal range 9.0 -inHg)	31.16.090
B	Vacuum switch, inductive universal, pre-set (Signal range 21.0 -inHg)	31.16.091
C	Vacuum switch, inductive universal, adjustable with knob Ø6	01.04.350

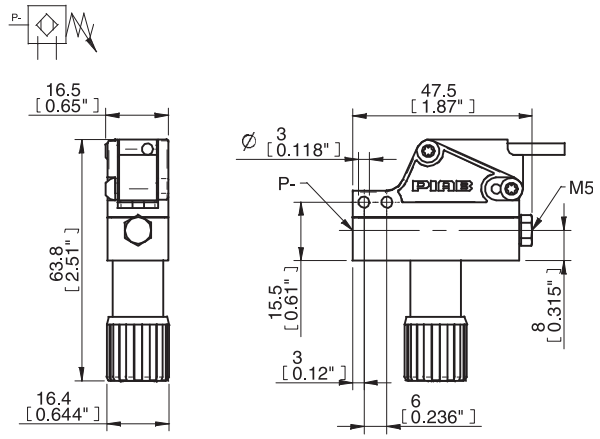

A

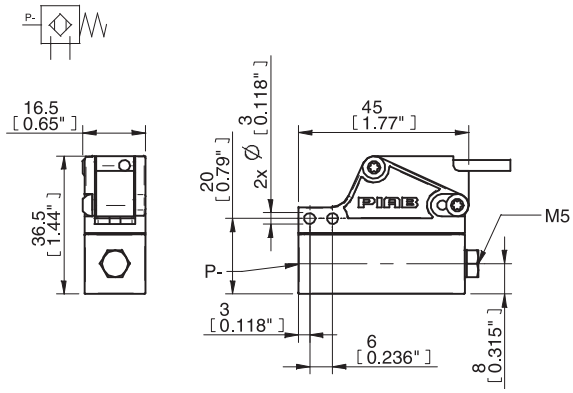

B

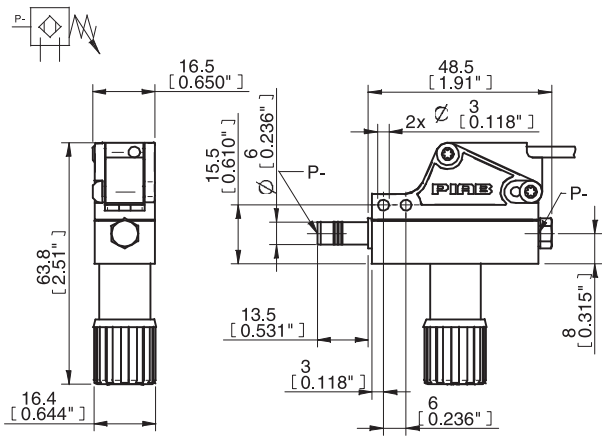

C

ORDERING INFORMATION, ACCESSORIES

Description	Part No.
Connection set for vacuum switch	01.00.488

Contents: Barrel nipple G1/8" M5 long, hose connector 4/2 M5. Material: Nickel-plated brass, SS, PA66, NBR, PA6. Fits: All pre-set and adjustable vacuum switches.

VACUUM SWITCHES, ELECTRO-MECHANICAL

The adjustable vacuum switches are actuated at a set vacuum level and set by a knob.

The pre-set vacuum switches are actuated at a pre-set vacuum level, non-adjustable.

- Converts a vacuum signal to an electric signal.
- Vacuum-actuated membrane linked to an electro-mechanical switch.
- Output function NO or NC.

TECHNICAL DATA

Description	Unit	Value
Pressure, max.	psi	87
Material		PBTP, PVC, PA, SS, NBR, POM, Al, CuZn
Temperature range	°F	-4–176
Weight	oz	1.76-2.19
Connection vacuum		M5
Function output		NO/NC
Hysteresis	-inHg	3.0
Cable		3 x 0.75 mm² x 1.64 ft
Voltage supply, max.	VAC/VDC	250/30
Safety classification		IP67
Current output, max	mA	5000

TECHNICAL DATA, SPECIFIC

Description	Unit	Value			
		31.16.068	31.16.061	31.16.095	31.16.096
Signal range	-inHg	4.0–28.0	4.0-28.0	7.5±1.5	19.0±3.0

Note:

NO, Normally Open, in electrical circuits corresponds to an open circuit breaker, which means that, if the gate is open, no current can pass through.

NO, Normally Open,in pneumatic circuits corresponds to an open valve, which means that, if the valve is open, compressed air passes through.

ORDERING INFORMATION

	Description	Part No.
A	Vacuum switch, electro-mechanical, adjustable with knob	31.16.068
B	Vacuum switch, electro-mechanical, adjustable with screw	31.16.061
C	Vacuum switch, electro-mechanical, pre-set (Signal range 7.5 -inHg)	31.16.095
C	Vacuum switch, electro-mechanical, pre-set (Signal range 19.0 -inHg)	31.16.096

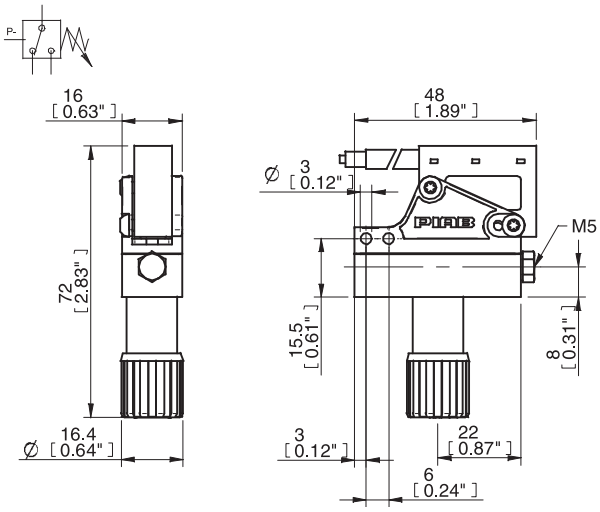

A

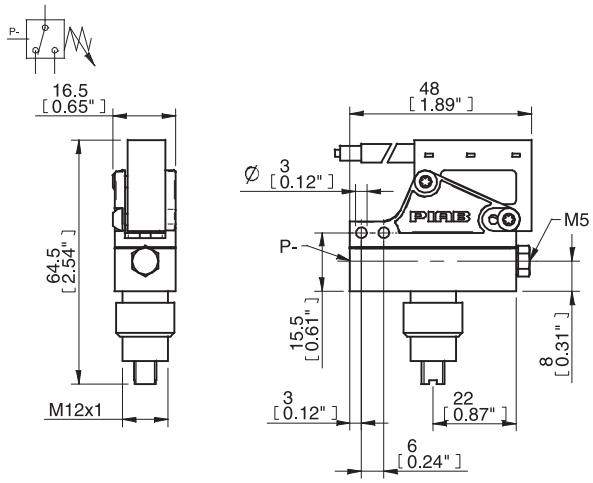

B

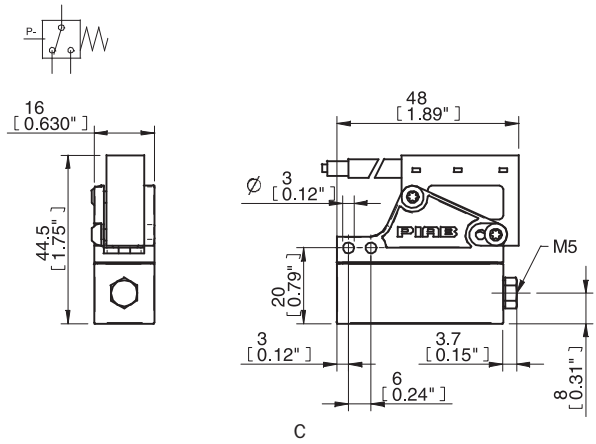

C

ORDERING INFORMATION, ACCESSORIES

Description	Part No.
Connection set for vacuum switch	01.00.488

Contents: Barrel nipple G1/8" M5 long, hose connector 4/2 M5. Material: Nickel-plated brass, SS, PA66, NBR, PA6. Fits: All pre-set and adjustable vacuum switches.

VACUUM SWITCHES, PNEUMATIC

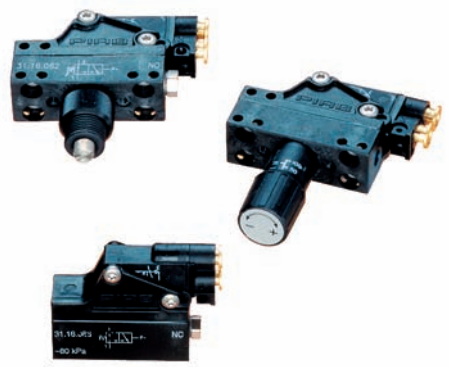

The adjustable vacuum switches are actuated at a set vacuum level and set by a knob.

The pre-set vacuum switches are actuated at a pre-set vacuum level, non-adjustable.

- Converts a vacuum signal to a pneumatic signal.
- Vacuum-actuated membrane linked to a pneumatic switch.
- Output function NO or NC.
- Narrow or wide hysteresis.

TECHNICAL DATA

Description	Unit	Value
Pressure, max.	psi	87
Pressure range	psi	22-116
Material		PA, SS, NBR, POM, Al, CuZn
Temperature range	°F	14-140
Weight	oz	1.38
Connection vacuum		M5

TECHNICAL DATA, SPECIFIC

Description	Unit	Value								
		31.16.069	31.16.062	31.16.070	31.16.063	31.16.083	31.16.084	31.16.085	31.16.087	31.16.088
Signal range	-inHg	3.0-28.0		4.5-28.0		3.0±0.60	7.5±1.2	19.0±2.4	9.0±1.5	21.0±3.0
Function output		NO		NC		NO			NC	
Hysteresis	-inHg	0.90		3.50		0.90			3.50	

NO, Normally Open, in pneumatic circuits corresponds to an open valve, which means that, if the valve is open, compressed air passes through.

ORDERING INFORMATION

	Description	Part No.
A	Vacuum switch, pneumatic, adjustable with screw (NO)	31.16.062
A	Vacuum switch, pneumatic, adjustable with screw (NC)	31.16.063
B	Vacuum switch, pneumatic, adjustable with knob (NO)	31.16.069
B	Vacuum switch, pneumatic, adjustable with knob (NC)	31.16.070
C	Vacuum switch, pneumatic, preset (NO 3.0 -inHg)	31.16.083
C	Vacuum switch, pneumatic, preset (NO 7.5 -inHg)	31.16.084
C	Vacuum switch, pneumatic, preset (NO 19.0 -inHg)	31.16.085
C	Vacuum switch, pneumatic, preset (NC 9.0 -inHg)	31.16.087
C	Vacuum switch, pneumatic, preset (NC 21.0 -inHg)	31.16.088

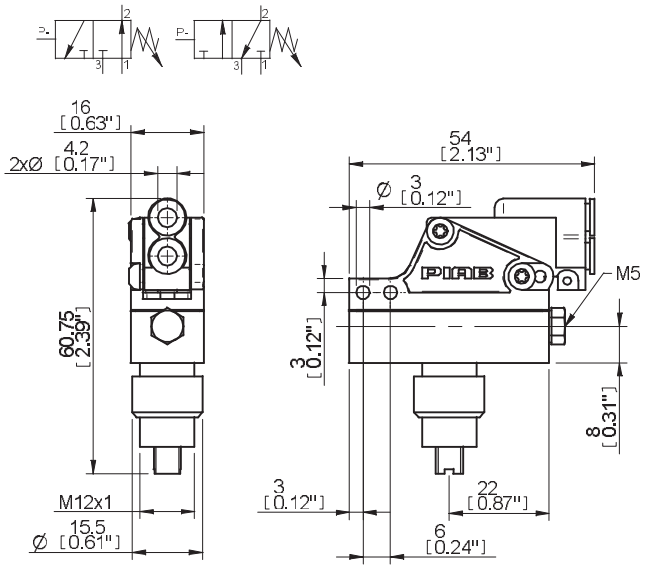

A

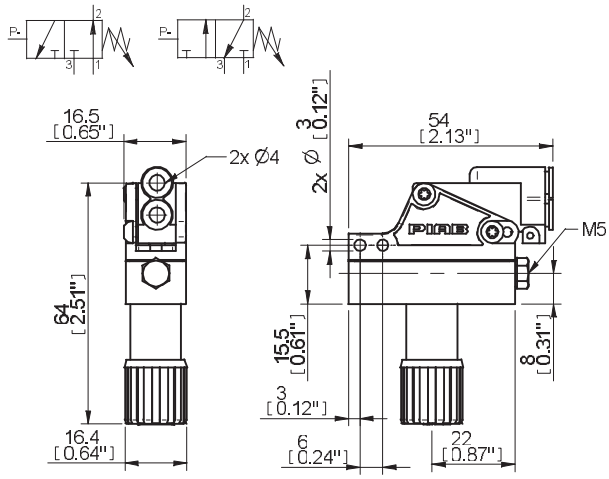

B

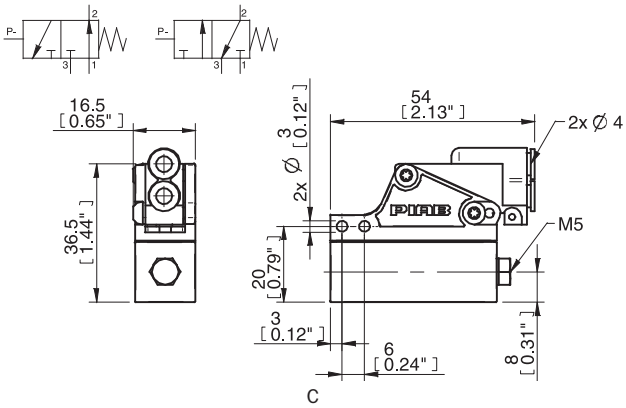

C

ORDERING INFORMATION, ACCESSORIES

Description	Part No.
Connection set for vacuum switch	01.00.488

Contents: Barrel nipple G1/8" M5 long, hose connector 4/2 M5. Material: Nickel-plated brass, SS, PA66, NBR, PA6. Fits: All pre-set and adjustable vacuum switches.

VACUUM SWITCH, ADJUSTABLE WITH KNOB

- The adjustable vacuum switch is actuated at a set vacuum level and set by a knob.
- Converts a vacuum signal to an electric signal.
- Vacuum-actuated membrane linked to a proximity-inductive universal switch.
- The output functions PNP NO, PNP NC, NPN NO and NPN NC are available in the vacuum switch.
- The switch must be connected in series with the load.
- Fits vacuum pump P3010.

TECHNICAL DATA

Description	Unit	Value
Material		PA, SS, NBR, POM, Al, PBTP, PVC, CuZn
Temperature range	°F	-13–176
Signal range	-inHg	3.0-28.0
Hysteresis	-inHg	0.60
Weight	oz	2.50
Connection vacuum		D=6/M5
Function		NO/NC/PNP/NPN
Cable		2 x 0.14 mm² x 6.56 ft
Voltage supply	V DC	24 (4–36)
Safety classification		IP67
Current output, max	mA	200
Voltage drop, max	V	4.6

ORDERING INFORMATION

Description	Part No.	P3010 Code No.
Vacuum switch, inductive universal, adjustable with knob Ø6	01.04.350	11

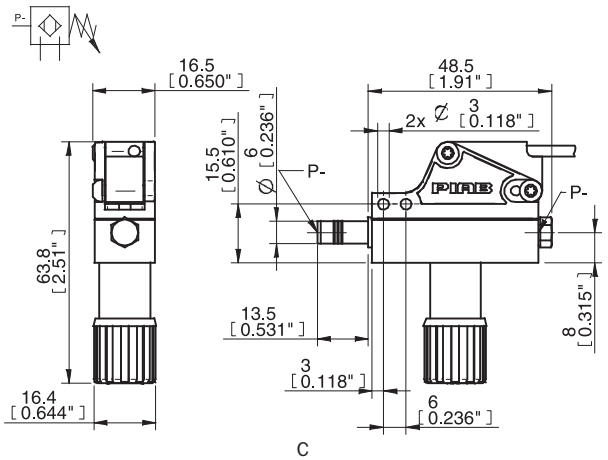

VACUUM SWITCHES, ELECTRIC

- EVS 54 with Calibrated Adjustment Dial
- EVS 100 NEMA 4X
- Range 0 to 30 -inHg.
- SPDT Switch, wired NO or NC.
- CE marked (conforms with Low Voltage Directive).
- UL 508 Listed; CSA Certified, C22.2 No. 14
- Electrical Rating: 15 amps 125/250 VAC resistive.

TECHNICAL DATA

Model/ Part No.	Description	Enclosure	Pressure Connection	Proof Pressure	Dead Band	Mounting
EVS 54/ 31.16.040	Calibrated adjustment dial (dial divisions 2 -inHg) Buna-N diaphragm sensor	Lexan Dust Cover	1/4" NPTM, aluminum	50 PSIG	1.5 to 3.5 -inHg	Holes for surface mounting
EVS100/ 31.16.041	Internal setpoint reference scale. Phosphor bronze bellows sensor EVS100 has optional indicator light.	NEMA 4X; IP65; die cast aluminum with epoxy powder coated	1/4" NPTM, nickel plated brass	30 -inHg	1 to 2 inHg	Surface mount with two screws or mount by pressure connection

OPTIONAL MICROSWITCHES

Part No.	Description
6259-217	5 amp 125/250 VAC resistive switch. Close band differential for EVS 54 (range .375-.875 -inHg) & EVS 100 (range .25-.50 inHg)
6259-529	10 amp 125/250 VAC resistive DPDT switch. Wider deadband for EVS 100 only. Deadband range is 2.0-4.0 -inHg.
6259-550	15 amp 480 VAC resistive DPDT switch. Adjustable deadband for EVS 100 only. Deadband range is 2.5-10.0 -inHg. (mod. #1519)

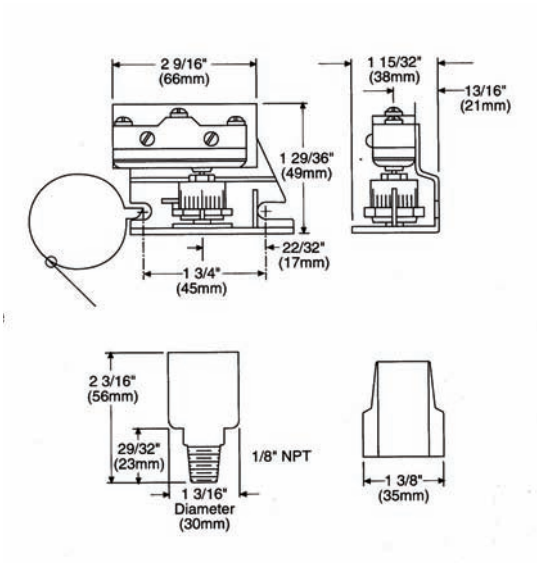

EVS 54

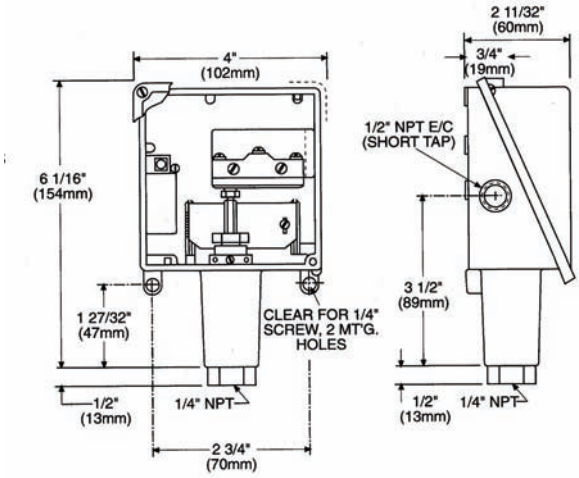

EVS 100

VACUUM SWITCH, ADJUSTABLE WITH ANALOG OUTPUT

- 1 output NO and 1 analog output
- 6 ft cable included, female connector
- Fits vacuum pump P3010

TECHNICAL DATA

Description	Unit	Value
Feed pressure, max	psi	29
Vacuum range	-inHg	0-30
Material		PC, POM, NBR, SS
Temperature range	°F	-4-158
Weight	oz	1.76
Connection vacuum		D=6/M5
Function		NO, NPN/PNP
Hysteresis	%	1–15
Supply voltage	VDC	10.8–30
Voltage output	VDC	1-5
Safety classification		IP40
Analog output, max. (load resistance min. 5kΩ	mA	1
Humidity	% RH	35–85
Response time	ms	2
Accuracy at 77°F		±3% F.S.
Current consumption, max	mA	17
High-voltage resistant	VAC	500
Insulation at 500 VDC	MOhm	100
Vibration resistance, 1,5 mm, XYZ, 2 h	Hz	10–500
Electric connection		M8 4 pin male
Current output, max	mA	80

Non-lubricated air, non-corrosive gases, compatible with Polycarbonate and Polyacetal.

ORDERING INFORMATION

Description	Part No.	P3010 Code No.
Vacuum switch, adjustable, PNP NO MM8	01.07.729	01
Vacuum switch, adjustable, NPN NO MM8	01.07.730	02

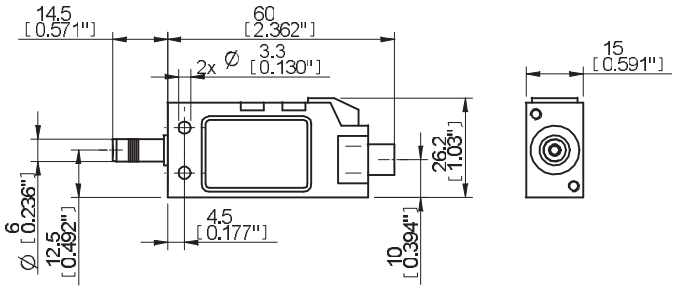

VACUUM SWITCH, ADJUSTABLE WITH LED-DISPLAY

- 2 outputs, NO
- M8 4-pin male connector
- LED - display
- Fits vacuum pump P3010

TECHNICAL DATA

Description	Unit	Value
Feed pressure, max	psi	29
Vacuum range	-inHg	0-30
Material		PC, POM, NBR, Al
Temperature range	°F	14-140
Weight	oz	1.83
Connection vacuum		D=6/M5
Function		NO, NPN/PNP
Hysteresis	-inHg	0.60
Voltage supply	VDC	12–24
Dielectric strength, 1 min	VAC	500
Safety classification		IP40
Humidity	%RH	35–85
Response time	ms	2
Accuracy at 77°F		±3% F.S
Current consumption, maximum	mA	35
Insulation resistance, at 500 VDC	MO/MW	100
Display		2-digits LED
Current output, max	mA	80

Non-lubricated air, non-corrosive gases, compatible with Polycarbonate and Polyacetal.

ORDERING INFORMATION

Description	Part No.	P3010 Code No.
Vacuum switch, adjustable, PNP NO DM8	01.07.732	09
Vacuum switch, adjustable, NPN NO DM8	01.07.733	10

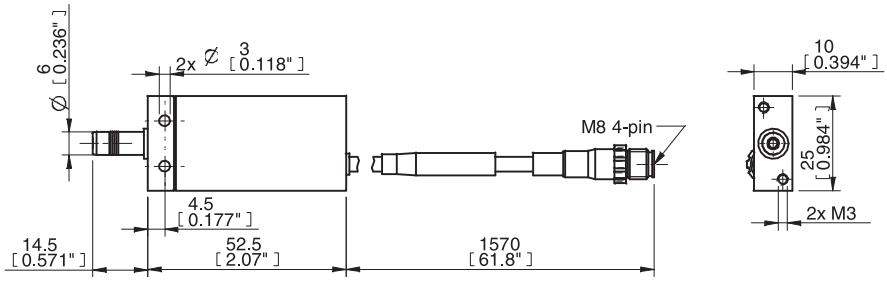

VACUUM SWITCH, ADJUSTABLE WITH 1 OUTPUT

- 1 output NO
- M8 3-pin male connector
- 6 ft cable included, female connection
- Fits vacuum pump P3010

TECHNICAL DATA

Description	Unit	Value
Pressure, max.	psi	29
Vacuum range	-inHg	0–30
Material		PC, Al
Temperature range	°F	14-140
Weight	oz	0.21
Connection vacuum		D=6/M5
Hysteresis		±2% F.S.
Voltage supply	VDC	10.8–30
Safety classification		IP40
Humidity	%RH	35–85
Response time, approx.	ms	1
Accuracy, at 77°F		±3% F.S.
Current consumption, max	mA	20
High-voltage resistance	VDC	500
Insulation at 500 VDC	MOhm	100
Vibration resistance, 1.5 mm, XYZ, 2 h	Hz	10–55
Current output, max	mA	80

Non-lubricated air, non-corrosive gases, compatible with Polycarbonate and Polyacetal.

ORDERING INFORMATION

Description	Part No.	P3010 Code No.
Vacuum switch, adjustable, PNP NO LM8	01.07.731	05

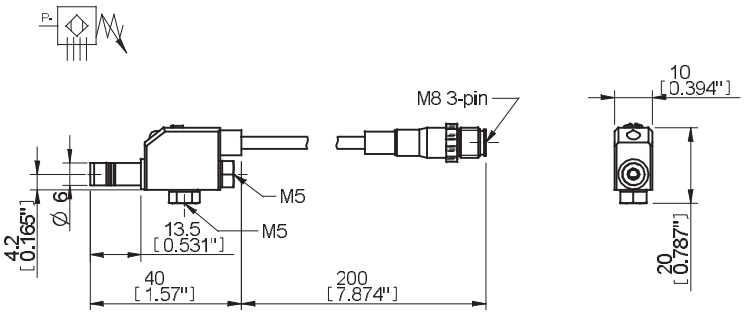

VACUUM SWITCH, ADJUSTABLE FOR P2010

- 1 output NO
- Cable 5.0 ft
- Range from pressure to vacuum

TECHNICAL DATA

Description	Unit	Value
Pressure, max.	psi	87
Vacuum/pressure range	-inHg/psi	-30-89
Material		PC, SS, PSC,CuZn, PA
Temperature range	°F	14-140
Weight	oz	0.21
Connection vacuum		M5
Hysteresis		±2% F.S.
Voltage supply	VDC	10.8–30
Safety classification		IP40
Humidity	%RH	35–85
Response time, approx.	ms	1
Accuracy, at 25°C		±3% F.S.
Current consumption, max	mA	20
High-voltage resistance	V DC	500
Insulation at 500 VDC	MOhm	100
Vibration resistance, 1.5 mm, XYZ, 2 h	Hz	10–55
Display		LED
Current output, max	mA	80

Note: Normally closed, opens at set value from -30 inHg to 89 psi.

ORDERING INFORMATION

Description	Part No.
Vacuum switch PNP M5	01.10.358
Vacuum switch NPN M5	01.10.359

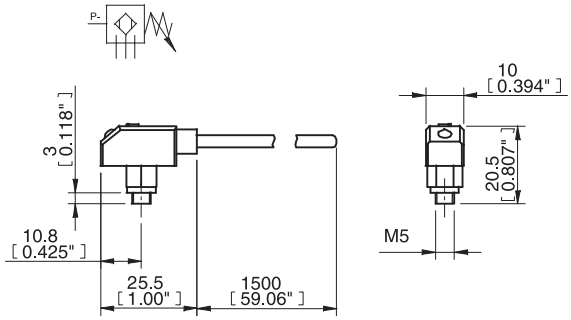

MINI VACUUM SWITCH, PRE-SET

- Electromechanical vacuum switch with digital output
- Very low weight and small format
- Preferably installed near the suction cup
- PNP NO/NC or NPN NO/NC output depending on type of connection
- Preset switching points at 9.0, 15.0 or 21.0 -inHg
- Vacuum connection with push-in connector with D=6 or G1/8” male thread
- Built-in red LED that indicates status
- M8 3-pin electric connection plug
- Fits vacuum pump P3010.

TECHNICAL DATA

Description	Unit	Value
Pressure, max	psi	29
Material		PA, TPU, SS, CuZn(Au)
Temperature range	F°	-13-185
Weight	oz	0.18
Signal range	-inHg	9.0, 15.0 or 21.0 +1.5/-0.30
Function		PNP NO/NC, NPN NO/NC
Hysteresis	-inHg	1.78 ± 0.30
Voltage	VDC	24 (12-30)
Safety classification		IP40
Current max	mA	100 inductive/400 resistive
Voltage drop, max (100mA/24V inductive load)	VDC	0.055
Response time	ms	4
Display		Red LED
Electric connection		M8 3-pin male

ORDERING INFORMATION

	Description	Part No.	P3010 Code No.
A	Vacuum switch VS4015, 9 -inHg, D=6 mm	01.10.245	18
A	Vacuum switch VS4015, 15 -inHg, D=6 mm	01.10.246	19
A	Vacuum switch VS4015, 21 -inHg, D=6 mm	01.10.247	20
B	Vacuum switch VS4016, 9 -inHg, G1/8"	01.10.248	21
B	Vacuum switch VS4016, 15 -inHg, G1/8"	01.10.249	22
B	Vacuum switch VS4016, 21 -inHg, G1/8"	01.10.250	23

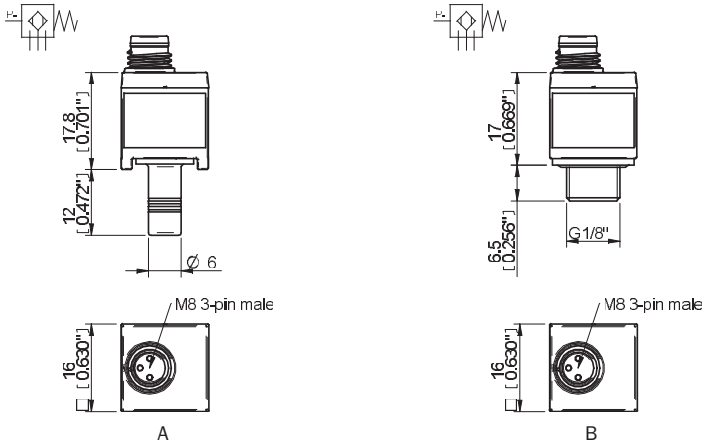

ORDERING INFORMATION, ACCESSORIES

Description	Part No.
Cable M8 3-pin female L=2m	01.08.141

Please note that the cable is not included with the vacuum switch. Please order the cable separately.

VACUSTAT, 2/2 NO

- The Vacustat is a vacuum-controlled 2/2 NO valve with adjustable vacuum level for switching.
- The Vacustat comes in two variations: Vacustat 1 with small hysteresis and Vacustat 2 with large hysteresis.
- Minimizes consumption of compressed air by controlling the incoming air flow to a vacuum pump.
- The vacuum pump must be fitted with a non-return valve.
- The Vacustat is recommended for vacuum pumps in sealed systems.
- Fits PIAB vacuum pump size 5-120.

TECHNICAL DATA

Description	Unit	Value
Feed pressure	psi	58-101.5
Material		PA, Al, SS, NBR, PUR, TPU, POM, CuZn
Temperature range	°F	32-140
Weight	oz	3.17
Connection vacuum		2 x M5
Connection compressed air		2 x 1/8" NPSF
Signal range	-inHg	4.5-29.2
Function		2/2 NO
Hysteresis	-inHg	0.60(1)/2.40(2)
Flow, nominal	scfm	18.2
kv		7.8
Life span, mechanical	cycles	>10,000,000
Diameter, nominal	mm	3.7

A vacuum-controlled valve shuts off the flow of compressed air to the pump when the pre-set vacuum level is reached (1). The vacuum level is set by a knob. Because of minor leakage in a vacuum system the vacuum level drops, and after a while the start-up level of the valve is reached (2). Then the pump will start and work until the shut-off level is reached again (3), etc.

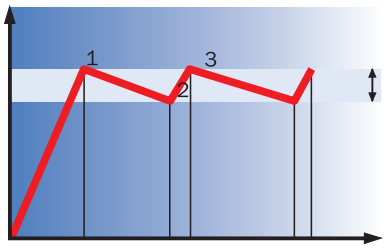

A = Vacuum pump with non-return valve
B = Vacuum switch
C = Feed valve
D = Suction cup
E = Vacuum filter

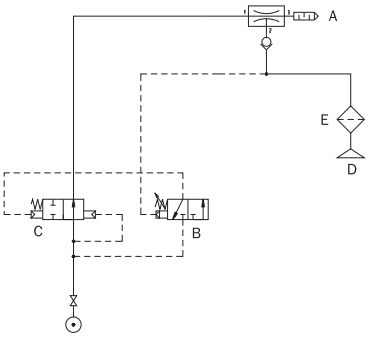

ORDERING INFORMATION

Description	Part No.
Vacustat 1 with small hysteresis	01.01.074
Vacustat 2 with large hysteresis	01.01.075

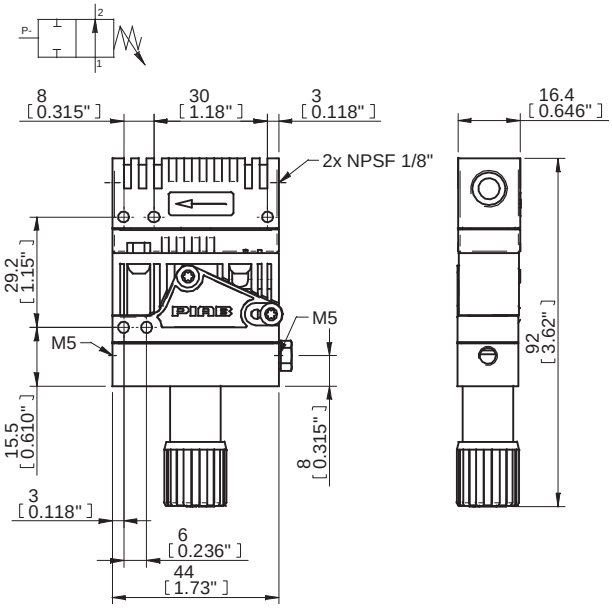

ORDERING INFORMATION, ACCESSORIES

Description	Part No.
Connection kit for Vacustat	01.00.750

VACTRAP™

VACUUM SAFETY VALVE

- Check valve that "traps" the vacuum pressure in vacuum systems for an indefinite period of time in sealed applications, such as when handling sheet metal or glass with suction cups.
- The object can be handled with an extremely high degree of safety even if the supply of compressed air should be cut off, if a pump failure should occur or if the emergency stop should be activated, thus preventing the object from being dropped.
- Equipped with a built-in blow-off check valve to provide quick release of the object with compressed air supplied from the outside.
- Available in a special version in which the vacuum pump and blow-off connections are interconnected (x-drilled), making it suitable for ejectors with integrated blow-off valve, such as PIAB's AVM™ models.

TECHNICAL DATA

Description	Unit	Value
Feed pressure, max., blow-off	psi	101.5
Feed pressure, min., breakaway blow-off	psi	36.25
Material		AL, Steel, Ceramic, Brass, NBR

TECHNICAL DATA, SPECIFIC

Description	Unit	Part Number/Value						
		1000	1002	1005	1010	1015	1016	1030
Temperature range	°F	-20–150	14-302	-20-150	-20-150	-20-150	-20-150	-20-150
Weight	oz	8.29	8.29	8.29	8.11	8.22	8.11	3.88
Extra		—	—	—	Vacuum detection 1/8" NPT fem.	x-drilled vacuum/ blow-off	x-drilled vacuum/ blow-off	—
Vacuum flow, max.	scfm	1.48	1.48	1.48	1.48	1.48	1.48	1.06
Sealing material		NBR	Viton	NBR				

ORDERING INFORMATION

	Description	Part No.
A	Vactrap™ VT-1A	1000
A	Vactrap™ VT-1A, Viton® sealing	1002
B	Vactrap™ VT-1A, extra mounting	1005
C	Vactrap™ VT-1A, extra vacuum port 1/8"	1010
A	Vactrap™ VT-1AGM, x-drilled vacuum/blow-off	1015
B	Vactrap™ VT-1AMGM, x-drilled vacuum/blow-off, extra mounting	1016
D	Vactrap™ VT-2A	1030

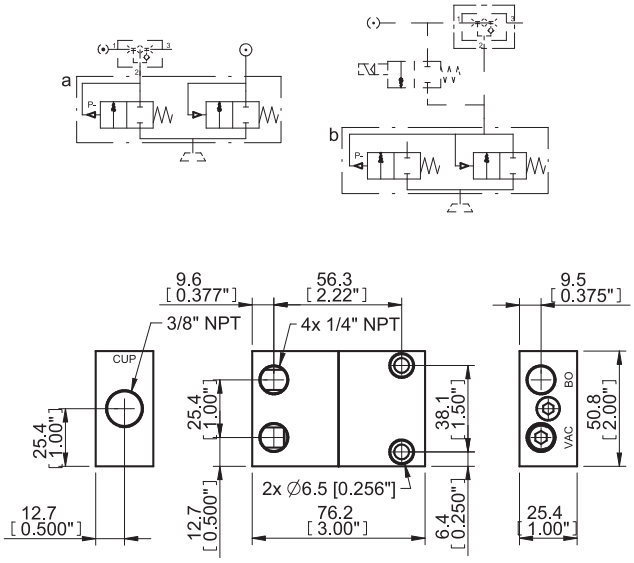

A. a = Vactrap™, b = Vactrap™ x-drilled

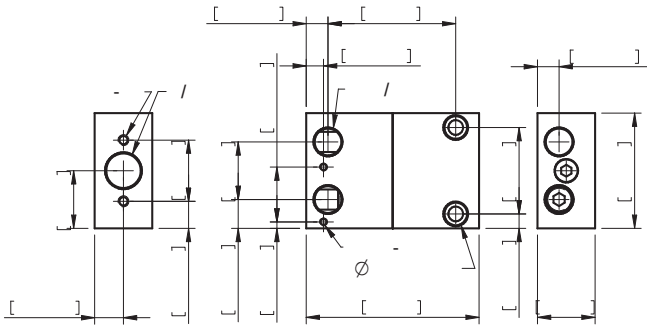

B. a = Vactrap™, b = Vactrap™ x-drilled

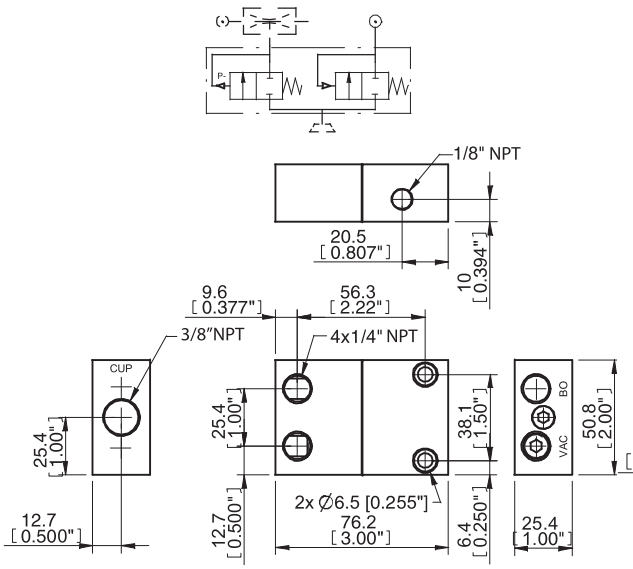

C

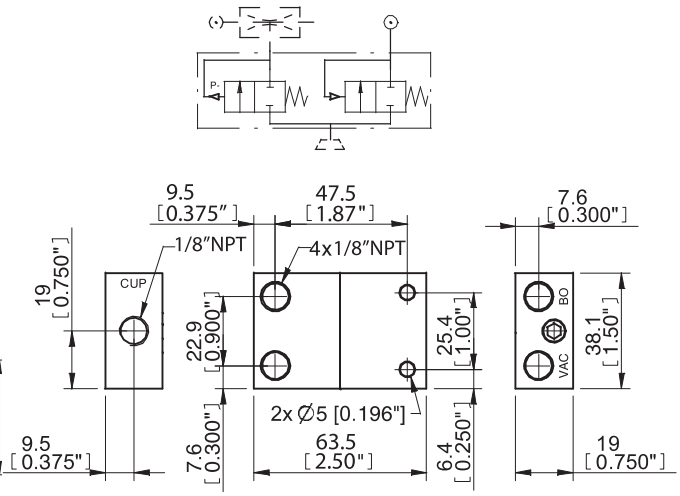

D

VACUUM FILTERS-PLASTIC

FEATURES

- To filter dust and other small particles from the vacuum flow.
- Reduces the risk of operation breakdown or stoppage in the pump.
- Replaceable filter element.
- Available with special filter element with increased filter area.

TECHNICAL DATA

Description	Unit	Value
Pressure range	psi	-14.5-0
Material		PA, PC, PE
Temperature range	°F	-4-176
Removal efficiency	µm	10

TECHNICAL DATA, SPECIFIC

Description	Unit	PPSF.125-X10	PPSF.25-X10	PPSF.375-X10	PPSF.5-X35	PPSF.75-X35	PPSF1.0-X50	PPSF1.5-X75
Weight	oz	1.70	1.98	2.47	6.61	6.42	15.0	18.8
Flow nominal	cf/s	0.05	0.07	0.09	0.53	0.53	1.48	3.00
Volume Internal	in^3	2.10	2.40	2.70	11.9	12.5	30.2	41.2
Filter area	in^2	4.90	4.90	4.90	16.0	16.0	29.5	35.0

ORDERING INFORMATION

	Description	Part No.
A	Vacuum filter 1/8" NPT	PPSF.125-X10
A	Vacuum filter 1/4" NPT	PPSF.25-X10
A	Vacuum filter 3/8" NPT	PPSF.375-X10
B	Vacuum filter 1/2" NPT	PPSF.5-X35
B	Vacuum filter, 3/4" NPT	PPSF.75-X35
C	Vacuum filter 1" NPT	PPSF1.0-X50
D	Vacuum filter 1 1/2" NPT	PPSF1.5-X75

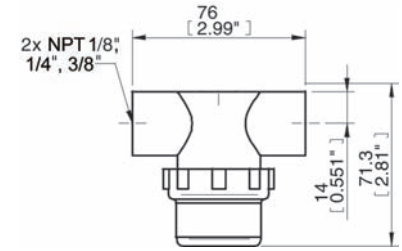

A

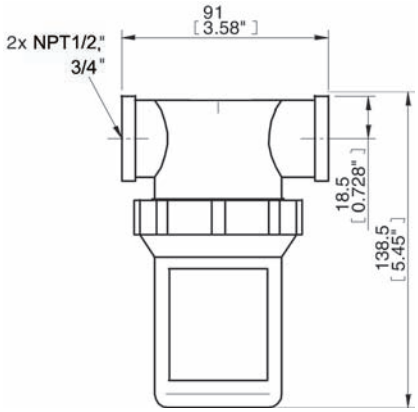

B

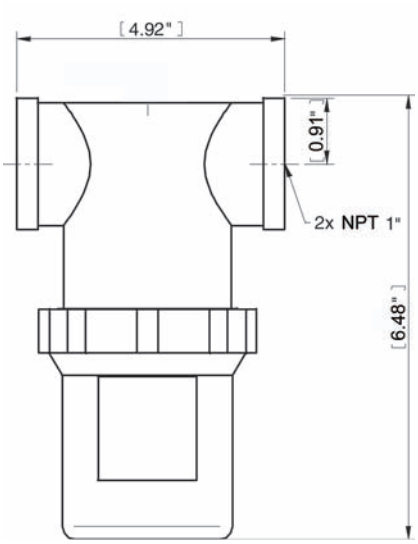

C

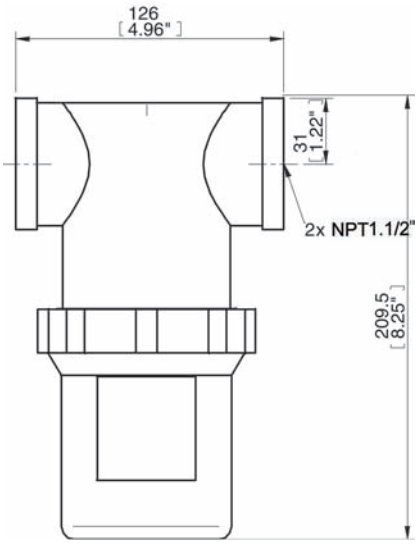

D

TECHNICAL DATA, ACCESSORIES

Description	Unit	Value			
		PPX10RE	PPX35RE	PPX50RE	PPX75RE
Weight	oz	0.25	0.92	1.76	2.61
Filter area	in^2	4.65	15.5	29.5	35.7
Removal efficiency	µm	10	10	10	10

ORDERING INFORMATION, ACCESSORIES

Description	Part No.
Filter element X10	PPX10RE3
Filter element X35	PPX35RE3
Filter element X50	PPX50RE3
Filter element X75	PPX75RE3

All filter elements are sold as a 3-Pack

VACUUM FILTERS-METAL

- To filter dust and other small particles from the vacuum flow.
- Reduces the risk of operation breakdown or stoppage in the pump.
- Replaceable filter element.
- Rugged construction.

TECHNICAL DATA

Description	Unit	Value
Pressure range	psi	-14.5-0
Material		Steel, NBR, PE
Temperature range	°F	-22-194
Removal efficiency	µm	5

TECHNICAL DATA, SPECIFIC

Description	Unit	PSF.375	PSF.5B	PSF.75B	PSF1.0	PSF1.5	PSF2.0
Weight	lb	1.00	1.00	1.00	2.20	4.60	10.8
Flow nominal	cf/s	0.23	0.35	0.35	0.42	1.33	2.50
Volume Internal	in^3	23.5	23.5	23.5	58.9	192	377
Filter area	in^2	54.7	54.7	54.7	86.4	288	648

ORDERING INFORMATION

Part No.	H in	L in	B in	E in	G in	Filter Element Part No.
PSF.375	3.80	2.05	3.78	0.86	NPT 3/8"	PSF.375RE
PSF.5B	3.80	2.05	3.78	0.86	NPT 1/2"	PSF.375RE
PSF.75B	3.83	2.08	3.78	0.75	NPT 3/4"	PSF.375RE
PSF1.0	4.37	2.63	5.00	0.75	NPT 1"	PSF.5RE
PSF1.5	6.50	4.50	6.81	0.75	NPT 1 1/2"	PSF1.5RE
PSF2.0	10.3	5.50	7.63	1.25	NPT 2"	PSF2.0RE

Note: The PSF1.5 and PSF2.0 are available with a steel mesh element. Add "XM" after the Part No. for the complete filter or just the filter element.

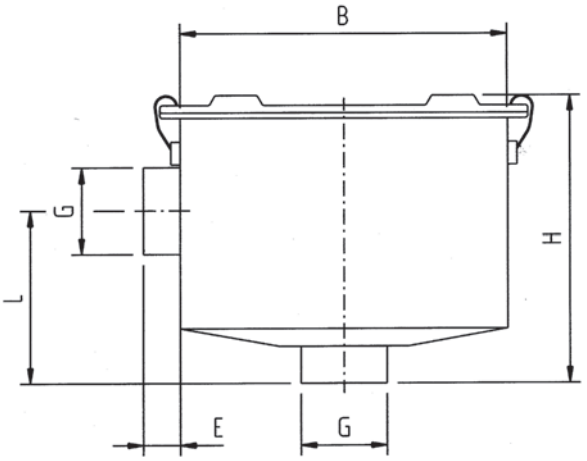

INLINE FILTERS

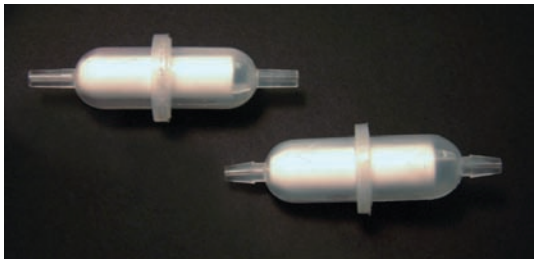

- In-Line filters from POREX™ Technologies.
- Translucent, inert polypropylene housing allows for visual inspection.
- These miniature filters can be used on compressed air lines or vacuum lines to protect vacuum pumps, vacuum switches and valves from contamination.
- Filter is constructed of chemically inert porous polyethylene and has a recommended working pressure up to 65 psig.

TECHNICAL DATA

Description	Unit	Value
Pressure range	psi	-14.69-65
Material		PP, PE
Temperature range	°F	32-176
Weight	oz	0.14

ORDERING INFORMATION

Part No.	Type
X-7438	10 micron, barbed
X-6621	10 micron, luer
X-7439	25 micron, barbed
X-6618	25 micron, luer

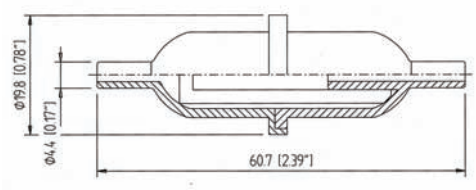

Luer

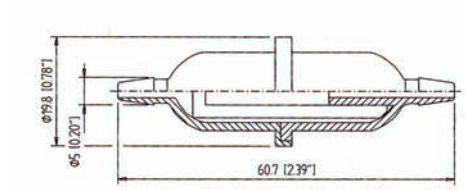

Barbed

SILENCERS

- Reduce noise from exhaust
- Flow-through design

TECHNICAL DATA

Description	Unit	Value
Noise level reduction, approximately	dB(A)	-10
Material		PA, HDPE
Temperature range	°F	-4-212

TECHNICAL DATA, SPECIFIC

Description	Unit	32.16.009	32.16.002	01.13.003	01.03.224
Weight	oz	0.49	2.15	3.35	15.0

ORDERING INFORMATION

	Description	Part No.
A	Silencer 3/8"	32.16.009
B	Silencer G3/4"	32.16.002
C	Silencer 1" NPSF	01.13.003
D	Silencer G1½"	01.03.224

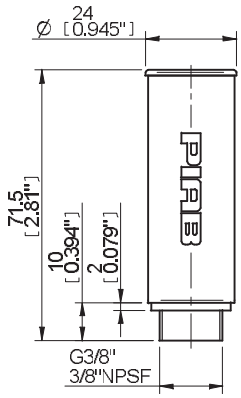

A

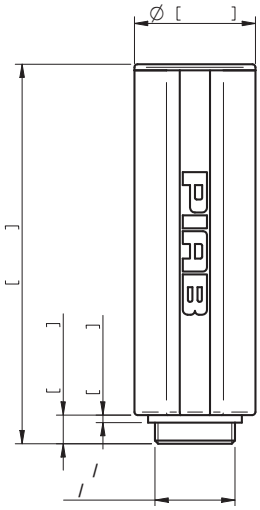

B

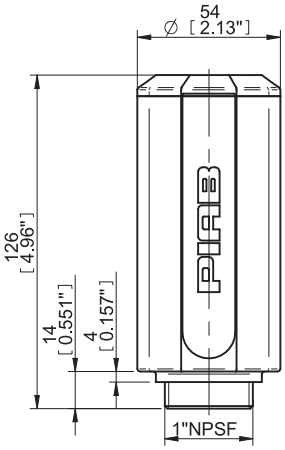

C

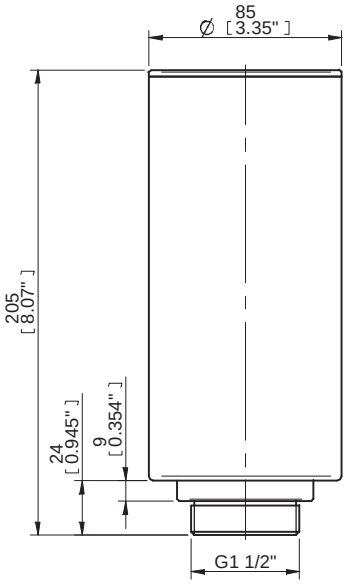

D

SILENCER COAX®

- Reduces noise from the exhaust
- Compatible with aluminium holders for MINI and MIDI COAX® cartridges
- Simple snap locking when mounting
- Flow-through design that eliminates the risk of impaired performance due to clogging of the silencer

TECHNICAL DATA

Description	Unit	Value
Material		PA, TPU, PE
Temperature range	°F	-4-176
Noise level reduction	dB(A)	≥10

TECHNICAL DATA, SPECIFIC

Description	Unit	01.11.977	01.11.976
Weight	oz	0.30	1.29

ORDERING INFORMATION

	Description	Part No.
A	Silencer COAX® MINI	01.11.977
B	Silencer COAX® MIDI	01.11.976

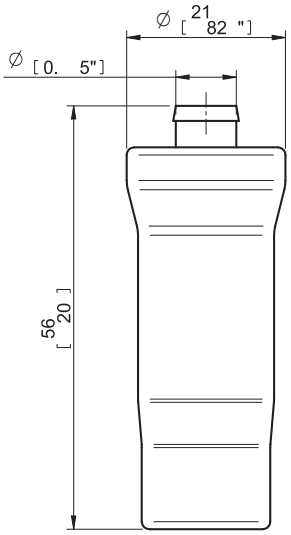

A

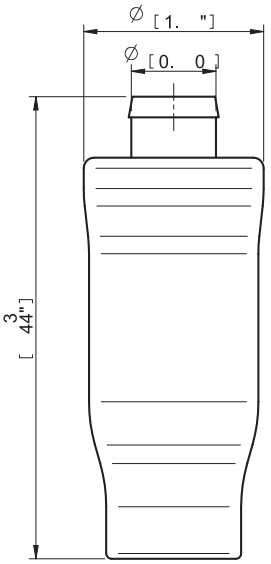

B

POREX™ MUFFLERS

- The POREX™ muffler is designed to specifically reduce air blast noise created at exhaust ports of pneumatic valves.
- The porous plastic body is made of high density porous polyethylene.
- The muffler is available in three (3) air flows: fine flow (FF-red base-35 micron), standard flow (black base-70 micron) and coarse flow (CF-green base-250 micron).

The porous polyethylene body is made to operate at high working pressures and can withstand pressures as high as 150 psi on a regular basis, at room temperature of 75° F. In the unlikely event of a blowout, resilient POREX™ plastic will not shatter, so there is no danger of flying fragments. The porous polyethylene is unaffected by water and oil usually present in compressed air lines. The muffler can be cleaned easily by rinsing in a cleaning fluid such as methylene chloride. The thread base of the muffler is made of solid, high-density polyethylene.

TECHNICAL DATA, SPECIFIC

Part No.	NPT in	L in	Ø in	Weight oz
N125	0.125	1.375	0.625	0.11
N250	0.250	1.625	0.75	0.18
N375	0.375	2.75	1.00	0.35
N500	0.50	2.875	1.00	0.42
N750	0.75	5.50	1.50	1.13
N1000	1.00	5.50	2.00	2.01

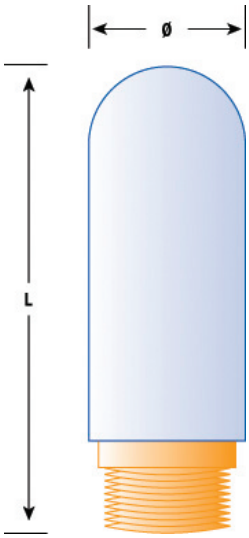

ORDERING INFORMATION

Description	Part No.
1/8" POREX™ Muffler	N125
1/4" POREX™ Muffler	N250
3/8" POREX™ Muffler	N375
1/2" POREX™ Muffler	N500
3/4" POREX™ Muffler	N750
1" POREX™ Muffler	N1000

VACUUM GAUGE AND MANOMETERS

- Analog indicator, spring joint – lever system
- The instruments include nut for installation on a panel

TECHNICAL DATA

Description	Unit	Value
Accuracy, of full scale	%	2.5
Material		CuZn, ABS, PMMA

TECHNICAL DATA, SPECIFIC

Description	Unit	31.01.602	31.01.603	31.01.626
Weight	oz	3.17	1.94	1.76
Signal range		0–30 -inHg	0–145 psi	0–36.25 psi
Medium		Vacuum	Postive pressure	

ORDERING INFORMATION

	Description	Part No.
B	Vacuum gauge 30 -inHg/100 -kPa	31.01.602
A	Manometer 150 psi/1 MPa	31.01.603
A	Manometer 36.25 psi/250 -kPa	31.01.626

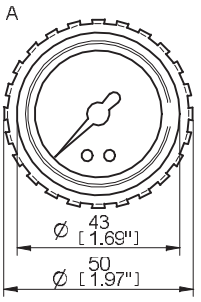

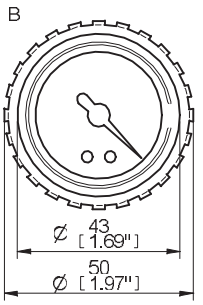

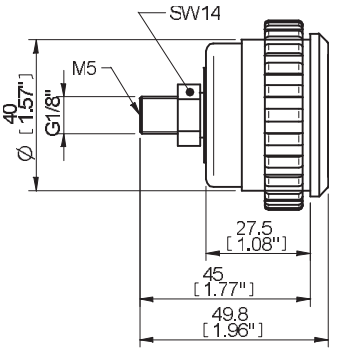

VACUUM HOSE

- Heavy duty clear PVC Helix reinforced suction and discharge hose.
- Food grade transparent PVC suction hose steel wire reinforced.
- Standard packaging is a 100 foot coil. 50 foot coil for PVH1.25-PVH2.0.

TECHNICAL DATA

Description	Unit	Value	
		PVC Helix Reinforced	Food Grade PVC Steel Wire Reinforced
Body		Clear PVC	Clear food grade PVC
Helix		White rigid PVC	Steel wire
Cover		Smooth, clear PVC	Smooth, clear food grade PVC
Temperature range	°F	20-150	25-175

ORDERING INFORMATION STEEL WIRE HOSE

Part No.	I.D. in	O.D. in	Working psi @ 70° F	Minimum bend radius in	Weight lbs/cft
PVH.25	0.25	0.453	200	1.0	6.0
PVH.375	0.375	0.630	175	1.5	10.7
PVH.50	0.50	0.748	140	2.0	12.4
PVH.625	0.625	0.906	100	2.5	17.8
PVH.75	0.75	1.023	100	3.0	21.8
PVH1.0	1.00	1.319	85	4.0	31.9
PVH1.25	1.25	1.614	85	3.0	45.0
PVH1.5	1.50	1.890	85	6.0	58.8
PVH2.0	2.00	2.440	70	8.0	91.3

ORDERING INFORMATION PVC HELIX HOSE

Part No.	I.D. in	O.D. in	Working psi @ 70° F	Minimum bend radius in	Weight cbs/cft
PVH.75-720	0.75	0.938	105	3.0	20
PVH1.0-720	1.00	1.250	100	3.0	27
PVH1.25-720	1.25	1.500	95	4.0	30
PVH1.5-720	1.50	1.813	85	4.0	40
PVH2.0-720	2.00	2.375	80	5.0	60

HOSE CLAMPS SS

Part No.	Description
4JM	Fits 7/32" - 5/8"
8J	Fits 7/16" - 1"
16J	Fits 11/16" - 1 1/2"
24J	Fits 1 1/16" - 2"
32J	Fits 1 9/16" - 2 1/2"

ACCESSORIES

COAX® CARTRIDGES

MICRO

MINI

MIDI

PROBE

PIAB VACUUM ACADEMY

SUCTION CUPS

ACCESSORIES

VACUUM GRIPPERS

PALLETIZING

VACTIVATOR

VGS™2010

VGS™3010

VGS™5010

VACUUM PUMPS

CLASSIC

CLASSIC MP

MAXI

MINI

P2010

P3010

P6010

PMAT